IL GRUPPO CAST

THE CAST GROUP

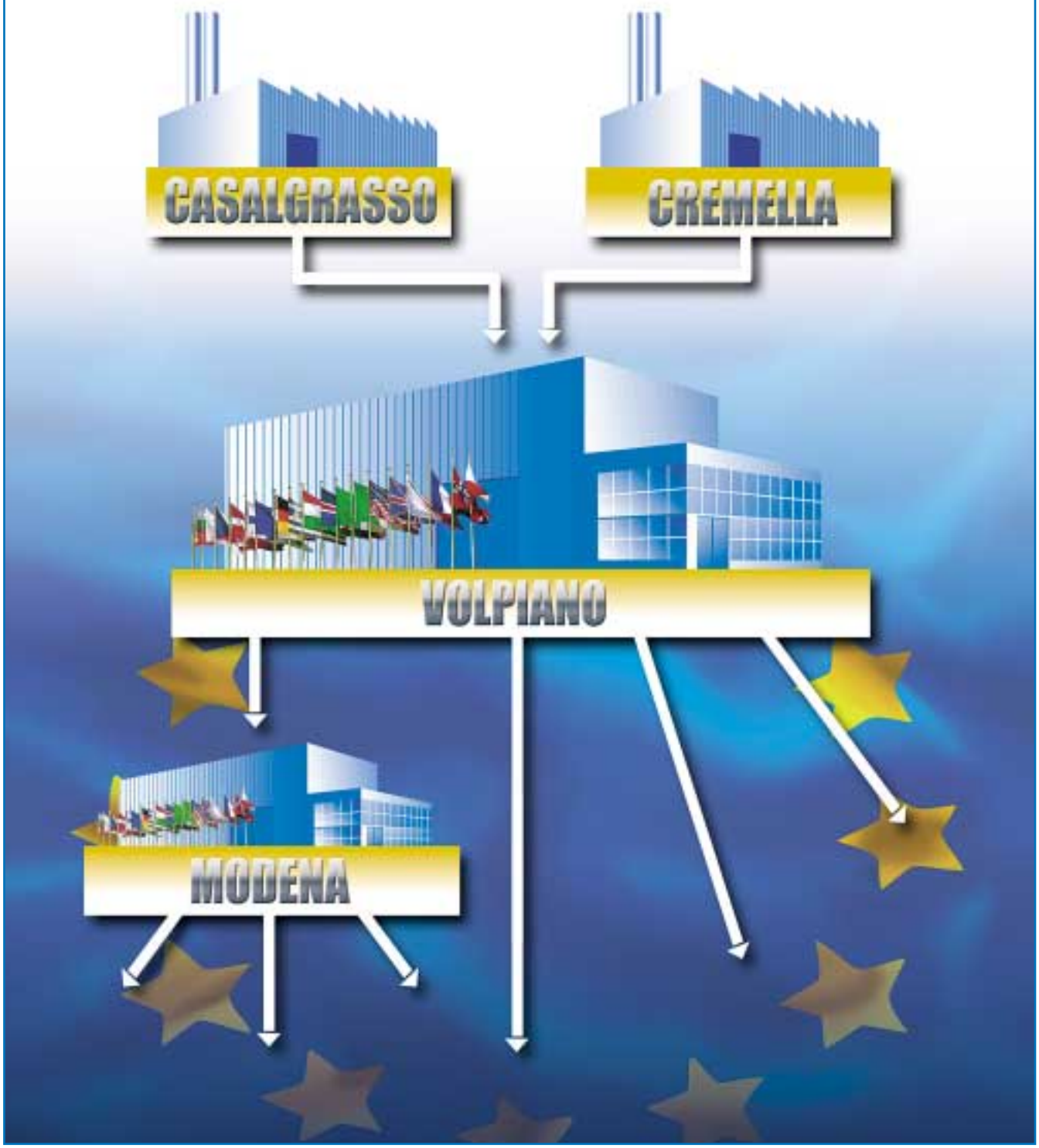

DIN 2353

SAE J514

BSI 5200

CARBON STEEL PIPE FITTING

This type of fitting has been used since many years in every kind of industrial application, to the full satisfaction of users through out the world.

The casting technology assures a constant quality of the raw product in general and of the specific steels required for specific purposes in particular.

The machinability of this steel gives no problems for the manufacturing of the final product.

Protective treatments introduced only recently have relaunched the employ of this steel for applications which not long ago were deemed as not possible.

We are therefore glad to be able to put this catalogue at your disposal, to enable you to choose the parts required for every application.

All fittings and valves recalled in this catalogue can be delivered in the various types of carbon steel available on the market.

DIN 2353

SAE J514

BSI 5200

STAINLESS STEEL PIPE FITTING

Thanks to new technologies, this particular type of steel has now entered the most various industrial sectors, especially into those of advanced technology: as for instance, chemistry with all the problems given by different fluids that create the final process; or components for instruments with the problems regarding the purity of the fluids used to control complicated machinery; or gas pipelines, with problems with temperature and working stress; or Nuclear Power Plants, Aviation and Navy.

These and many other sectors as important as these ones, led us to take care, primarily, since a few years, of the problems of this particular product.

We are therefore glad to be able to put this catalogue at your disposal, to enable you to choose the parts required for every application .

All fittings and valves recalled in this catalogue can be delivered in the various types of stainless steel available on the market.

3. FOR A CONSTANT IMPROVEMENT

The staff concerned full time in the Quality and Research is highly competent and constantly brought up to date and represents the 10% of the employees working with our company.

Since 1993 our manual and quality procedures constantly follow the reference rules development.

The numerous inspections carried out by the certification agencies have always confirmed the continuous adjustment to the ISO 9001 norm requirements and the steadfast improvement of our quality system.

Technical information pag. 1÷75

Type: 1001.. pag 76	Type: 1001...4 pag 76	Type: 1002.. pag 77	Type: 1003.. Gas cilind. Type: 1004.. Metrico cilind. 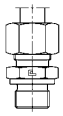 pag 78/79	Type: 1005.. Gas cilind. Type: 1006.. Metrico cilind. 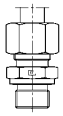 pag 80/81	Type: 1007.. Gas cilind. Type: 1008.. Metrico cilind. 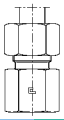 pag 82	Type: 1009.. UNF/UN-2A 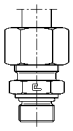 pag 83
Type: 10CT..P NPT 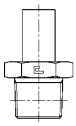 pag 84	Type: 1010.. NPT 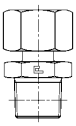 pag 84	Type: 10CTG..R Gas cilind. 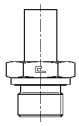 pag 85	Type: 1011.. Gas cilind. 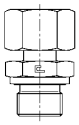 pag 85	Type: 10CTG..M Metrico cil. 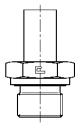 pag 85	Type: 1012.. Metrico cilind. 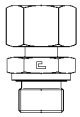 pag 85	Type: 1013.. Gas cilind. Type: 1014.. Metrico cilind. 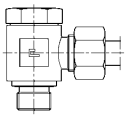 pag 86/87
Type: 1015.. Gas cilind. Type: 1016.. Metrico cilind. 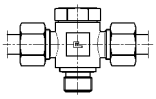 pag 88	Type: 1017.. Gas conico Type: 1018.. NPT 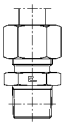 pag 89/90	Type: 1019.. Metrico conico 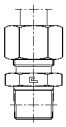 pag 91	Type: 1020.. Gas conico Type: 1021.. NPT 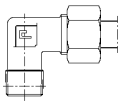 pag 92/93	Type: 1022.. Metrico conico 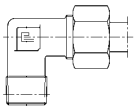 pag 94	Type: 1023.. Gas cilind. Type: 1024.. Metrico cilind. 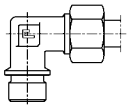 pag 95	Type: 1025.. Gas conico Type: 1026.. NPT 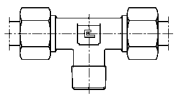 pag 96
Type: 1027.. Metrico conico 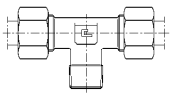 pag 97	Type: 1028.. Gas cilind. Type: 1029.. Metrico cilind. 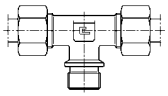 pag 98	Type: 1030.. Gas conico Type: 1031.. NPT 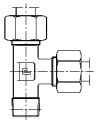 pag 99	Type: 1032.. Metrico conico 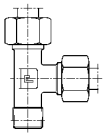 pag 100	Type: 1033.. Gas cilind. Type: 1034.. Metrico cilind. 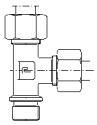 pag 101	Type: 1035.. 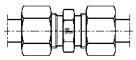 pag 102	Type: 1036.. 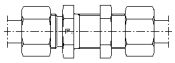 pag 103
Type: 1037.. 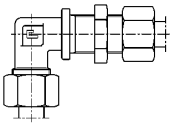 pag 104	Type: 1038.. 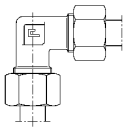 pag 105	Type: 1039.. 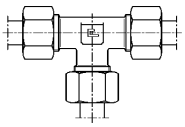 pag 106	Type: 1040.. 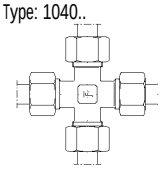 pag 107	Type: 1041.. 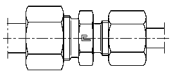 pag 108	Type: 10LT.. 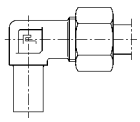 pag 109	Type: 1042.. 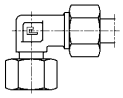 pag 110/111
Type: 1043.. Gas cilind. Type: 1044.. Metrico cilind. 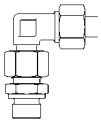 pag 112/113	Type: 1045.. 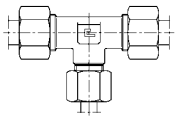 pag 114/115	Type: 10NTL.. 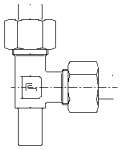 pag 116	Type: 1046.. 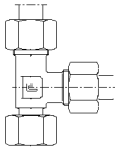 pag 117/118	Type: 1047.. Gas cilind. Type: 1048.. Metrico cilind. 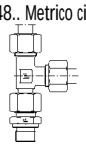 pag 119/120	Type: 1049.. Gas cilind. 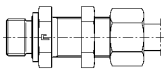 pag 121	Type: 10NTT.. 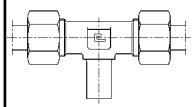 pag 122
Type: 1050.. 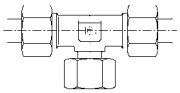 pag 123/124	Type: 1051.. Gas cilind. Type: 1052.. Metrico cilind. 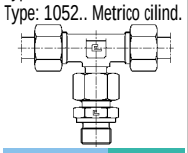 pag 125/126	Type: 10H..L 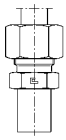 pag 127	Type: 1053.. 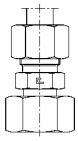 pag 128/129	Type: 10H..S 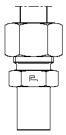 pag 130	Type: 1054.. 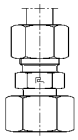 pag 131/132	Type: 1055.. 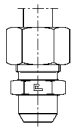 pag 133
Type: 1056.. pag 134	Type: 1057.. 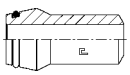 pag 135	Type: 1058.. 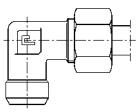 pag 136	Type: 1059.. Gas cilind. pag 137	Type: 10CFM.. Gas cilind. pag 138	Type: 1060.. Gas cilind. pag 138	Type: 1061.. Gas cilind. Type: 1062.. Metrico cilind. 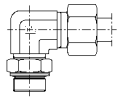 pag 139/140
Type: 1063.. UNF/UN-2A 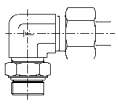 pag 141	Type: 1064.. Gas cilind. Type: 1065.. Metrico cilind. 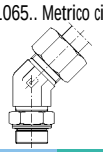 pag 142/143	Type: 1066.. UNF/UN-2A 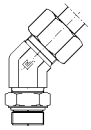 pag 144	Type: 1067.. Gas cilind. Type: 1068.. Metrico cilind. 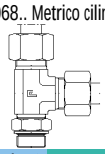 pag 145/146	Type: 1069.. UNF/UN-2A 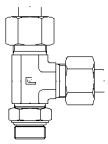 pag 147	Type: 1070.. Gas cilind. Type: 1071.. Metrico cilind. 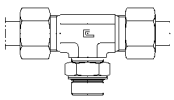 pag 148/149	Type: 1072.. UNF/UN-2A 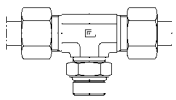 pag 150

Technical information pag. 1÷75

Type: 1073.. pag 151	Type: 1074..Gas cilind. pag 152	Type: 1075..Gas cilind. pag 152	Type: 1076.. Gas cilind. Type: 1077.. Metrico cilind. pag 153	Type: 1078.. Gas cilind. Type: 1079.. Metrico cilind. pag 154	Type: 1080.. 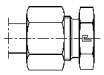 pag 155	Type: 1081.. Gas cilind. Type: 1082.. Metrico cilind. 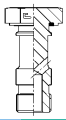 pag 156
Type: 1083.. 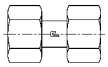 pag 157	Type: 1084.. pag 157	Type: 1085.. pag 158	Type: 1086.. pag 158	Type: 1087.. pag 158	Type: 1088.. Gas cilind. Type: 1089.. Metrico cilind. 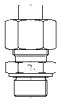 pag 159	

Type: 6005.. Gas cilind. Type: 6006.. Metrico cilind. 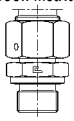 pag 162	Type: 6007.. Gas cilind. Type: 6008.. Metrico cilind. 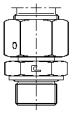 pag 163	Type: 6009.. UNF/UN-2A 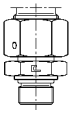 pag 164	Type: 6010.. NPT 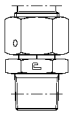 pag 165	Type: 6035.. 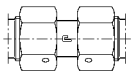 pag 166	Type: 6042.. 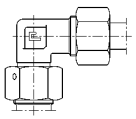 pag 167	Type: 6043.. Gas cilind. Type: 6044.. Metrico cilind. 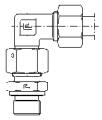 pag 168
Type: 6046.. 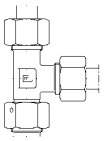 pag 169	Type: 6047.. Gas cilind. Type: 6048.. Metrico cilind. 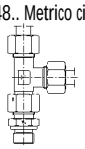 pag 170	Type: 6050.. 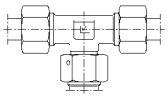 pag 171	Type: 6051.. Gas cilind. Type: 6052.. Metrico cilind. 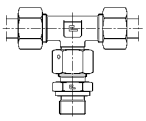 pag 172	Type: 6053.. Type: 6054.. 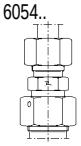 pag 173/174	Type: 6060..Gas cilind. pag 175	

Type: 0301.. NBR Type: 0302.. Viton pag 160	Type: 0303.. NBR Type: 0304.. Viton pag 160	Type: 0305.. NBR Type: 0306.. Viton pag 160	Type: 100000 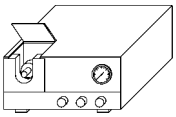 pag 161	Type: 1000.. 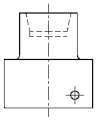 pag 161	Type: 1000.. 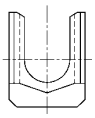 pag 161	Type: 1000.. pag 161
Type: 1000.. pag 161						

Technical information pag. 1÷75

Type: 2001.. pag 176	Type: 2002.. pag 176	Type: 2003.. Gas cilind. Type: 2004.. Metrico cilind. pag 177/178	Type: 2005.. UNF/UN-2A pag 179	Type: 2006.. Gas cilind. pag 180	Type: 2007.. NPT pag 180	Type: 2008.. Gas conico Type: 2009.. NPT pag 181/182
Type: 2010.. Gas conico Type: 2011.. NPT 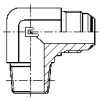 pag 183/184	Type: 2012.. Gas conico Type: 2013.. NPT 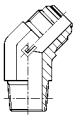 pag 185	Type: 2014.. Gas conico Type: 2015.. NPT 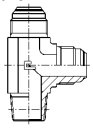 pag 186	Type: 2016.. Gas conico Type: 2017.. NPT 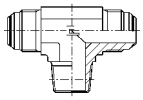 pag 187	Type: 2018.. Gas cilind. 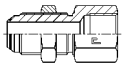 pag 188	Type: 2019.. NPT 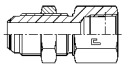 pag 188	Type: 2020.. 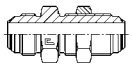 pag 189
Type: 2021.. 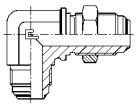 pag 189	Type: 2022.. 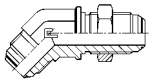 pag 190	Type: 2023.. 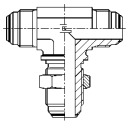 pag 190	Type: 2024.. pag 191	Type: 2025.. 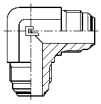 pag 191	Type: 2026.. 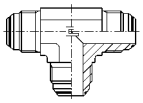 pag 192	Type: 2027.. 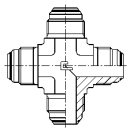 pag 192
Type: 2028.. Gas cilind. 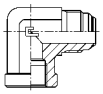 pag 193	Type: 2029.. NPT 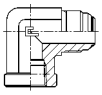 pag 193	Type: 2030.. Gas cilind. 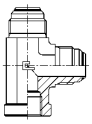 pag 194	Type: 2031.. NPT 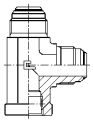 pag 194	Type: 2032.. Gas cilind. 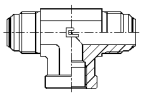 pag 195	Type: 2033.. NPT 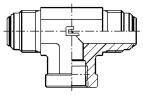 pag 195	Type: 2034.. pag 196
Type: 2035.. Gas cilind. Type: 2036.. Metrico cilind. pag 197	Type: 2037.. UNF/UN-2A pag 198	Type: 2038.. Gas conico Type: 2039.. NPT 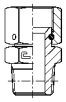 pag 199	Type: 2040.. 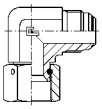 pag 200	Type: 2041.. 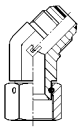 pag 200	Type: 2042.. 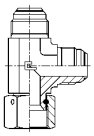 pag 201	Type: 2043.. 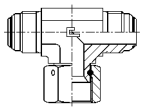 pag 201
Type: 2044.. Gas cilind. Type: 2045.. Metrico cilind. 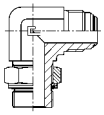 pag 202	Type: 2046.. UNF/UN-2A 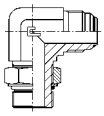 pag 203	Type: 2047.. Gas cilind. Type: 2048.. Metrico cilind. 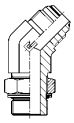 pag 204	Type: 2049.. UNF/UN-2A 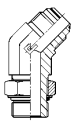 pag 205	Type: 2050.. Gas cilind. Type: 2051.. Metrico cilind. 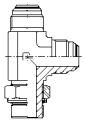 pag 206	Type: 2052.. UNF/UN-2A 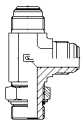 pag 207	Type: 2053.. Gas cilind. Type: 2054.. Metrico cilind. 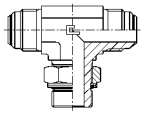 pag 208
Type: 2055.. UNF/UN-2A 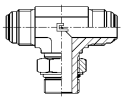 pag 209	Type: 2056.. Gas cilind. pag 210	Type: 2057.. Gas cilind. 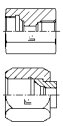 pag 210	Type: 2058.. Gas cilind. Type: 2059.. Metrico cilind. pag 211/212	Type: 2060.. Gas cilind. Type: 2061.. Metrico cilind. pag 213	Type: 2062.. Gas cilind. Type: 2063.. Metrico cilind. 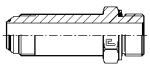 pag 214	Type: 2064.. UNF/UN-2A 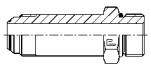 pag 215
Type: 2065.. Gas cilind. Type: 2066.. Metrico cilind. 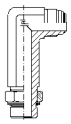 pag 216/217	Type: 2067.. UNF/UN-2A 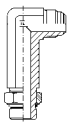 pag 218	Type: 2068.. NPT 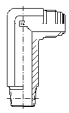 pag 219	Type: 2069.. pag 220	Type: 2070.. 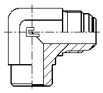 pag 221	Type: 2071.. 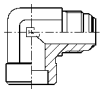 pag 222	Type: 2072.. 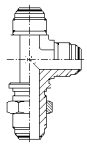 pag 223
Type: 2073.. pag 223	Type: 2074.. pag 224	Type: 2075.. UNF/UN-2A pag 224	Type: 2076.. pag 224	Type: 200000 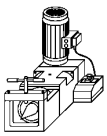 pag 225	Type: 2000.. pag 225	Type: 2000.. pag 225

Technical information pag. 1÷75

Type: 3001.. Gas conico Type: 3002.. NPT pag 226	Type: 3003.. Gas cil./con. Type: 3004.. Gas cil./NPT pag 227	Type: 3005.. Gas cilind. Type: 3006.. Metrico cilind. pag 228/229	Type: 3007.. Gas cilind./Metrico cilind. pag 230	Type: 3008.. Gas cilind. Type: 3009.. Metrico cilind. pag 231	Type: 3010.. Gas conico Type: 3011.. NPT pag 232	Type: 3012.. Gas cilind. Type: 3013.. Metrico pag 233
Type: 3014.. Gas conico Type: 3015.. NPT pag 234	Type: 3016.. Gas cilind. Type: 3017.. Metrico cilind. 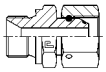 pag 235	Type: 3018.. Gas cilind. Type: 3019.. Metrico cilind. 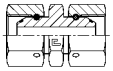 pag 236	Type: 3020.. Gas conico Type: 3021.. NPT 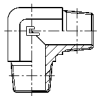 pag 237	Type: 3022.. Gas cil./con. Type: 3023.. Gas cil./NPT 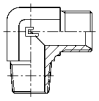 pag 238	Type: 3024.. Gas cilind. Type: 3025.. Metrico cilind. 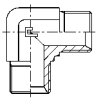 pag 239	Type: 3026.. Gas cil./con. Type: 3027.. Gas cil./NPT 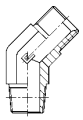 pag 240
Type: 3028.. Gas cilind. Type: 3029.. Metrico cilind. 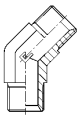 pag 241	Type: 3030.. Gas cil./con. Type: 3031.. Gas cil./NPT 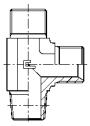 pag 242	Type: 3032.. Gas cil./con. Type: 3033.. Gas cil./NPT 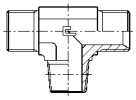 pag 243	Type: 3034.. Gas cilind. Type: 3035.. Metrico cilind. 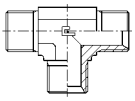 pag 244	Type: 3036.. Gas cilind. 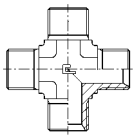 pag 245	Type: 3037.. Gas cil./NPT 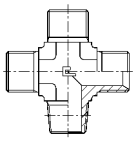 pag 245	Type: 3038.. Gas cil./con. 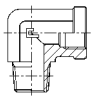 pag 246
Type: 3039.. NPT 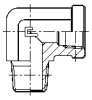 pag 246	Type: 3040.. Gas cil./con. 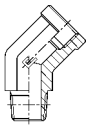 pag 247	Type: 3041.. NPT 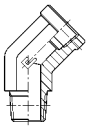 pag 247	Type: 3042.. Gas cilind. pag 248	Type: 3043.. NPT pag 248	Type: 3044.. Gas cilind. 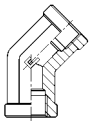 pag 249	Type: 3045.. NPT 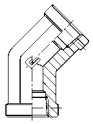 pag 249
Type: 3046.. Gas cil./con. 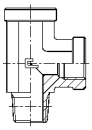 pag 250	Type: 3047.. NPT 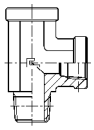 pag 250	Type: 3048.. Gas cil./con. 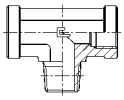 pag 251	Type: 3049.. NPT 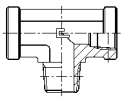 pag 251	Type: 3050.. Gas cilind. 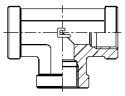 pag 252	Type: 3051.. NPT 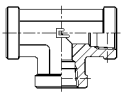 pag 252	Type: 3052.. Gas cilind. 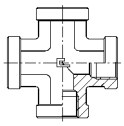 pag 253
Type: 3053.. NPT 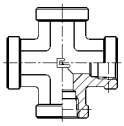 pag 253	Type: 3054.. Gas cilind. Type: 3055.. Metrico cilind. 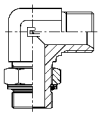 pag 254	Type: 3056.. Gas cilind. Type: 3057.. Metrico cilind. 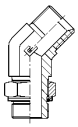 pag 255	Type: 3058.. Gas cilind. Type: 3059.. Metrico cilind. 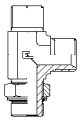 pag 256	Type: 3060.. Gas cilind. Type: 3061.. Metrico cilind. 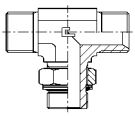 pag 257	Type: 3062.. Gas cil./con. Type: 3063.. Gas cil./NPT 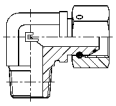 pag 258	Type: 3064.. Gas cilind. Type: 3065.. Metrico cilind. 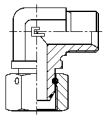 pag 259
Type: 3066.. Gas cilind. Type: 3067.. Metrico cilind. 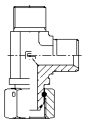 pag 260	Type: 3068.. Gas cilind. Type: 3069.. Metrico cilind. 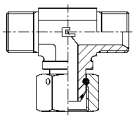 pag 261	Type: 3070.. Gas cilind. Type: 3071.. Metrico cilind. 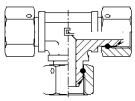 pag 262	Type: 3072.. Gas cilind. pag 263	Type: 3073.. Gas cilind. 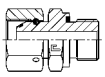 pag 263	Type: 3074.. Gas cilind. Type: 3075.. Metrico cilind. pag 264	Type: 3076.. Gas cilind. Type: 3077.. Metrico cilind. 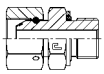 pag 265
Type: 3078.. Gas cilind. pag 266	Type: 3079.. Gas cilind. pag 266	Type: 3080.. Gas cilind. Type: 3081.. Metrico cilind. 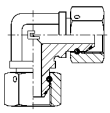 pag 267	Type: 3082.. Gas cilind. Type: 3083.. Metrico cilind. 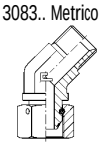 pag 268	Type: 3084.. Gas cilind. Type: 3085.. Metrico cilind. 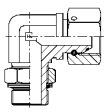 pag 269	Type: 3086.. Gas cilind. Type: 3087.. Metrico cilind. 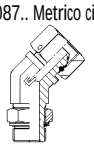 pag 270	Type: 3088.. Gas cilind. Type: 3089.. Metrico cilind. 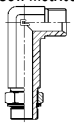 pag 271

Technical information pag. 1÷75

Type: 5001.. 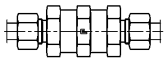 pag 272	Type: 5002.. Gas cilind. Type: 5003.. Metrico cilind. 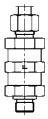 pag 273	Type: 5004.. Gas cilind. Type: 5005.. Metrico cilind. 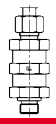 pag 274	Type: 5006.. Gas conico Type: 5007.. NPT 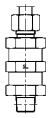 pag 275	Type: 5008.. Gas conico Type: 5009.. NPT pag 276	Type: 5010.. Gas cilind. Type: 5011.. Metrico cilind. 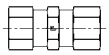 pag 277	Type: 5012.. Gas conico Type: 5013.. NPT 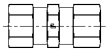 pag 278
Type: 5014.. 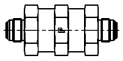 pag 279	Type: 5015.. Gas cilind. Type: 5016.. Metrico cilind. 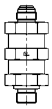 pag 280	Type: 5017.. Gas cilind. Type: 5018.. Metrico cilind. 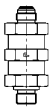 pag 281	Type: 5019.. UNF/UN-2A 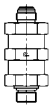 pag 282	Type: 5020.. UNF/UN-2A 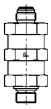 pag 283	Type: 5021.. pag 284	Type: 5022.. Gas cilind. Type: 5023.. Metrico cilind. pag 284
Type: 5024.. Gas conico Type: 5025.. NPT pag 285						

DELIVERIES

Cast S.p.A. fittings are delivered in the configuration shown in the pictures of this catalogue.

Legenda:
Available on scheduled orders only: means that the article is slow moving and will be delivered within 90 days from the date of order.
Available on request only: means that the article is not commonly in stock; please contact our offices for further delivery details.

ORDERING EXAMPLE

B 3 STANDARD RING

• If you require a male stud coupling for a Ø 18 mm tube with 1/2” BSP parallel thread made of carbon steel with standard ring specify:

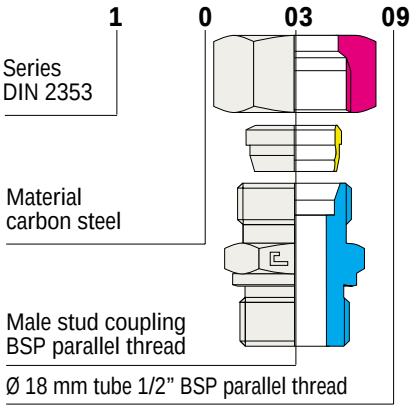

B 4 PATENTED RING

• If you require a male stud coupling for a Ø 18 mm tube with 1/2” BSP parallel thread made of carbon steel with the new ring B4 with elastomeric NBR seal on the threaded end specify:
• If you wish for the VITON seal add “.V” after the last number.

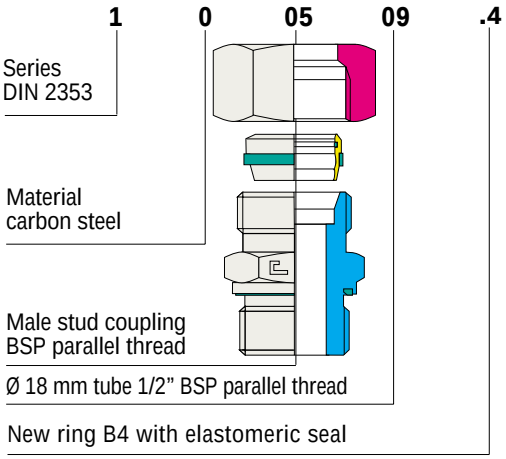

CORPO ONLY BODY

• If ordering only the body add to the fitting code the number “.1”, specify:

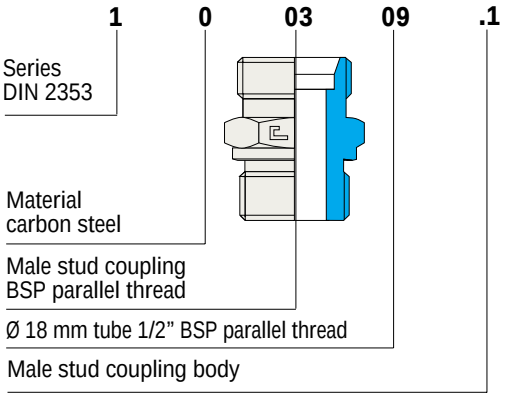

VITON® is a DuPont Dow Elastomers Trade Mark

ORDERING EXAMPLE

B 3 STANDARD RING

• If you require a male stud coupling for a Ø18 mm tube with 1/2" parallel thread made of stainless steel with standard ring specify:

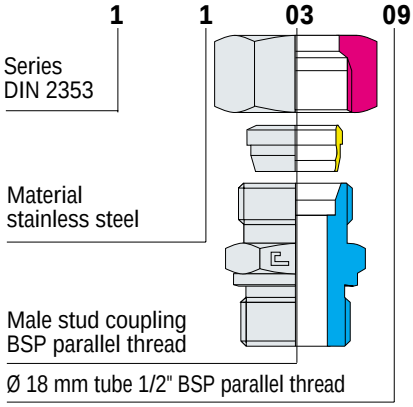

B 4 PATENTED RING

• If you require a male stud coupling for a Ø 18 mm tube with 1/2" BSP parallel thread made of stainless steel with the new ring B4 with elastomeric VITON seal on the threaded end specify:
• If you wish for the NBR seal add ".N" after the last number

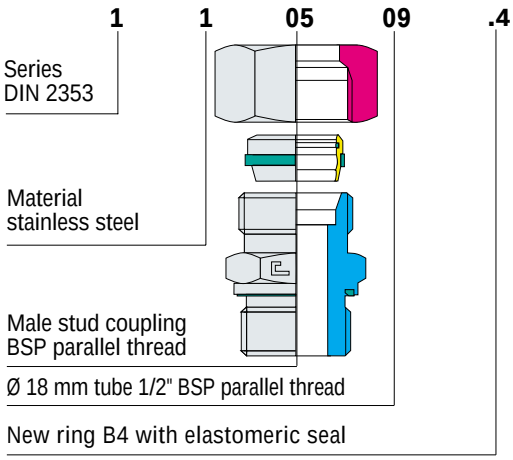

CORPO ONLY BODY

• If ordering only the body add to the fitting code the number ".1", specify:

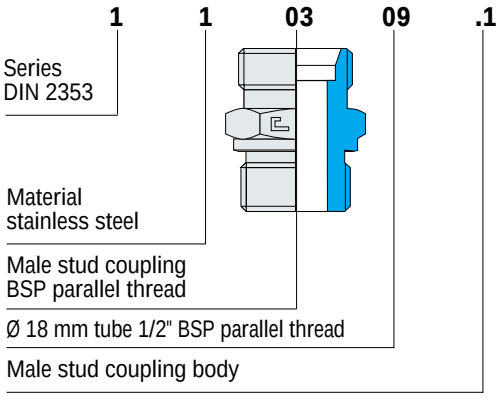

VITON® is a DuPont Dow Elastomers Trade Mark

ORDERING EXAMPLE

SAE

• If you require a male stud coupling for a Ø 20 mm tube with thread 3/4" BSP parallel made of carbon steel with elastomeric NBR seal on the threaded end specify:
• If you wish for the VITON seal add ".V" after the last number

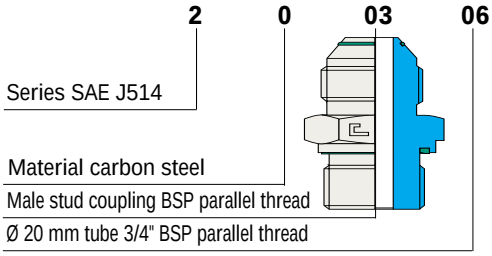

SAE

• If you require a male stud coupling for a Ø 20 mm tube with thread 3/4" BSP parallel made of stainless steel with elastomeric VITON seal on the threaded end specify:
• If you wish for the NBR seal add ".N" after the last number.

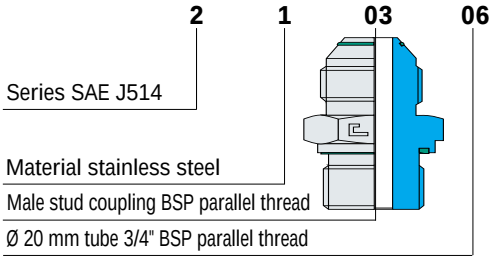

SAE

• If you wish to order the standard SAE J514 without o-ring, please add " .3 " after the last number asking 200306.3 or 210306.3.

SAE

• If you wish to use steel tube with inches measures add at the end of the code the letter ".W" specify:

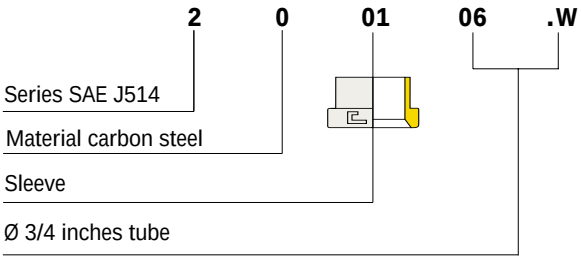

BSI

• If you require a male stud coupling for a Ø 18 mm tube with thread 3/4" BSP parallel made of carbon steel

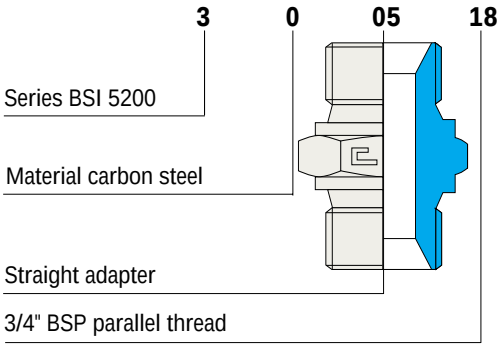

BSI

• If you require a male stud coupling for a Ø 18 mm tube with thread 3/4" BSP parallel made of stainless steel specify:

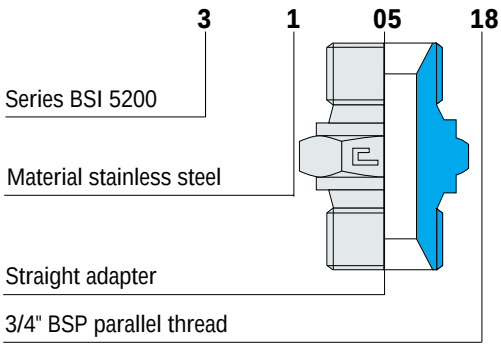

VITON® is a DuPont Dow Elastomers Trade Mark

GENERAL INFORMATION

• STEEL USED ON ALL SERIES

Carbon steel fittings

Component	Material specification				Reference norm
Ring / sleeve	CF9SMnPb36	CF9SMnPb28	CF9SMn36	CF9SMn28	UNI 4838
	11SMnPb37	11SMnPb30	11SMn37	11SMn30	EN 10087
Nut	CF9SMnPb36	CF9SMnPb28	CF9SMn36	CF9SMn28	UNI 4838
	11SMnPb37	11SMnPb30	11SMn37	11SMn30	EN 10087
Straight body	CF9SMnPb36	CF9SMnPb28	CF9SMn36	CF9SMn28	UNI 4838
	11SMnPb37	11SMnPb30	11SMn37	11SMn30	EN 10087
Forged body	CF9SMnPb36	CF9SMnPb28	CF9SMn36	CF9SMn28	UNI 4838
	11SMnPb37	11SMnPb30	11SMn37	11SMn30	EN 10087

Stainless steel fittings

Component	Material specification		Reference norm
Ring / sleeve	X6CrNiMoTi17-12-2 (1.4571)	X5CrNiMo17-12-2 (1.4401)	DIN 17440
			EN 10088
Nut	X6CrNiMoTi17-12-2 (1.4571)	X2CrNiMo17-12-2 (1.4404)	DIN 17440
			EN 10088
Straight body	X6CrNiMoTi17-12-2 (1.4571)	X5CrNiMo17-12-2 (1.4401)	DIN 17440
			EN 10088
Forged body	X6CrNiMoTi17-12-2 (1.4571)	X5CrNiMo17-12-2 (1.4401)	DIN 17440
			EN 10088

• ALLOWED WORKING TEMPERATURES

Carbon Steel -20° to + 120° degrees Celsius, according to ISO 8434
Stainless steel -60° to + 200° degrees Celsius, according to ISO 8434

• PRESSURE RATE REDUCTION

The allowed working pressure for stainless steel fittings manufactured with 1.4571 must be reduced according to the working registered temperature as per ISO 8434. In case of multi-components systems all the parameters must be calculated on the weakest component used.

Type of steel	Working temperature	Lowering percentage
1.4571	≥ 50°C	- 4%
1.4571	≥ 100°C	- 11%
1.4571	≥ 200°C	- 20%

• GASKETS

The gaskets used on valves and fittings are normally manufactured in NBR. All have a working temperature of -35° to +100° degrees Celsius with a hardness of 85 ± 5 shores. For higher temperatures Viton® seals are suggested with working temperatures between -25° to + 200° degrees Celsius with a hardness of 80 ± 5 shores. All the items that are assembled with gaskets or seals of any kind must be handled according to the DIN 7716 norm (requisites for the stocking of rubber product).

• SEAL ON THREADED ENDS

To obtain the maximum performance, the taper male thread is to be matched with the taper female thread. The cylindrical male thread is to be matched with the cylindrical female thread. It is possible to match a taper male thread with a cylindrical female thread, but this combination is technically valid only in pipings where medium/low performances are required and is never to be used where high pressures are applied. In case of matching of a cylindrical thread with relatively soft material, it is advisable to use the plain gasket type of seal that guarantees a perfect sealing even with a relatively low tightening torque.

VITON® is a DuPont Dow Elastomers Trade Mark

• CARBON STEEL FITTINGS FINISH TREATMENT

All fittings and valves are zinc-plated according to UNI ISO 2081 and 4520. The parts after treatment appear white with yellow shades of color. The plating thickness is 8 ÷ 12 microns. This new treatment fully comply to the latest EEC environmental directives as its hexavalent chromium free. The resistance in saline fog with standard salt concentration (test in accordance with UNI ISO 9227) is 400 hours before the protective layer begins to wear off. Additionally, this treatment, chemically lubricate the items reducing as well torque strength requirements. Due to this treatment the parts may be used also in external exposure provided that the environment be not very aggressive. The cutting ring, after heat treatment to harden the surface, passivation treatment and ecological zinc-plating, follows a bath which facilitates the assembly.

• STAINLESS STEEL FITTINGS FINISH TREATMENT

All the fittings and valves are treated with a chemical cleaning process which eliminate all oxides and burrs due to the machining phase, without altering or damaging the product. After this, follows a bath to clean the product and take away the last impurities, if any. The piece at the end of the treatment looks real bright, very indicated for industrial applications where this type of steel is normally requested.

• THERMAL TREATMENT

The cutting rings after being machined are heat treated to harden the surface. This type of treatment, on stainless steel cutting rings, may decrease the amagneticity of the ring itself.

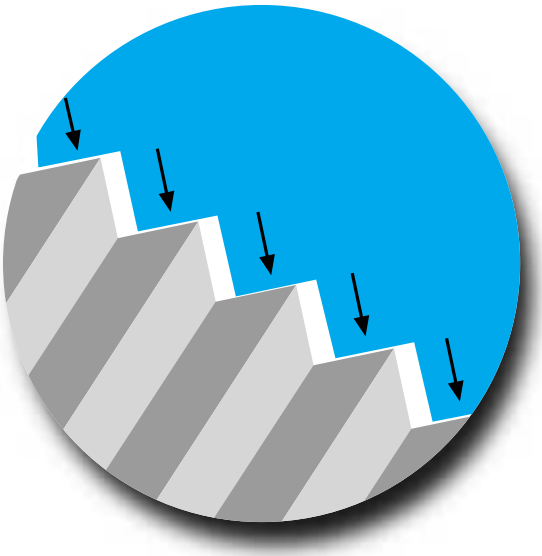

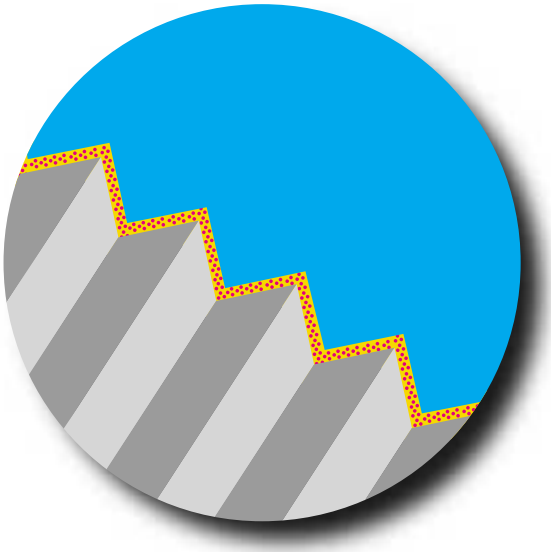

STAINLESS STEEL FITTINGS

Seen the special characteristics of this type of steel (hard but mild) particular attentions are required to avoid problems. One of these requirements is the correct lubrication of all the components to be done during pre-assembling and assembling. Therefore is required to use the right lubricant to make properly functional systems, at all times.

ANTI-SEIZING COMPOUND (NICKEL BASIS)

The anti-seizing compound (Nickel Basis) exposed to a strong pressure originates "millions of grains of Nickel" rolling between the surfaces. It allows a safer tightening and an easier unblocking. This compound may be used both indoors and outdoors. It protects the threads from wearing out and breaking, keeps away rust and corrosion. Nickel covers the connected surfaces avoiding any founding or welding and moreover there is only pure colloidal nickel and no trace of carbonic deposits.
According to specification Mil. A 907 D.
Approved by the Ministry of Agriculture of the United States of America (USAD).
Packaging weight 227 gr. Art. 82356.

N.B.: Do not use on systems with oxygen or in the presence of ammonia or acetylene.

• ALLOWED CARBON STEEL TUBES ON ALL SERIES

• For steel tubes in mild carbon steel we advise to use calibrated seamless cold drawn without welding tubes ST 37.4 as per DIN 1630.

• Maximum allowed hardness on the outside diameter of the tube is 75 HRB.

• The indicated pressure are to be intended at a constant pressure rate and with temperatures between -20° and +120° degrees Celsius.

ØTube mm	Tolerance mm	Thickness mm	Static DIN 2413-I pressure bar	Dinamic DIN 2413-III pressure bar	Weight Kg/m
4	±0,1	0,5	313	274	0,047
4		1	522	502	0,075
6	±0,1	1	389	374	0,123
6		1,5	549	528	0,166
6		2	692	665	0,197
8	±0,1	1	333	289	0,222
8		1,5	431	441	0,240
8		2	549	528	0,296
8		2,5	658	632	0,339
10	±0,1	1	282	249	0,222
10		1,5	373	358	0,314
10		2	478	460	0,395
10		2,5	576	553	0,462
10		3	666	641	0,518
12	±0,08	1*	235	210	0,271
12		1,5	353	305	0,388
12		2	409	393	0,493
12		2,5	495	476	0,586
12		3	576	553	0,666
12		3,5	651	627	0,734
14	±0,08	1,5	302	265	0,462
14		2	403	343	0,592
14		2,5	434	417	0,709
14		3	507	487	0,814
14		3,5	576	553	0,906
15	±0,08	1,5	282	249	0,499
15		2	376	323	0,641
15		3	478	460	0,888
16	±0,08	1,5**	264	234	0,536
16		2	353	305	0,691
16		2,5	386	372	0,832
16		3	452	435	0,962
18	±0,08	1,5*	235	210	0,610

ØTube mm	Tolerance mm	Thickness mm	Static DIN 2413-I pressure bar	Dinamic DIN 2413-III pressure bar	Weight Kg/m
18	±0,8	2	313	274	0,789
18		2,5	392	335	0,956
18		3	409	393	1,111
20	±0,8	2**	282	249	0,888
20		2,5	353	305	1,079
20		3	373	358	1,258
20		3,5	426	410	1,424
20		4	478	460	1,578
22	±0,8	2*	256	228	0,986
22		2,5	320	280	1,202
22		3	385	329	1,406
25	±0,08	2*	226	202	1,134
25		2,5	282	249	1,387
25		3	338	294	1,628
25		4	394	379	2,072
25		4,5	437	420	2,275
28	±0,08	2*	201	182	1,282
28		2,5	252	224	1,572
28		3	302	265	1,850
30	±0,08	2**	168	171	1,381
30		2,5	235	210	1,695
30		3	282	249	1,998
30		4	376	323	2,565
35	±0,15	2*	161	147	2,189
35		2,5	201	182	2,004
35		3	242	216	2,367
35		4	322	281	3,058
38	±0,15	3**	223	200	2,589
38		4	297	261	3,354
38		5	371	319	4,069
42	±0,2	3	201	182	2,885
42		4	269	238	3,749

* Tubes that require support sleeve if used for DIN 2353 applications
** Tubes to be used for ISO 8434-2 / SAE J514 norm only

CALCULATION PRESSURES

The calculation of pressure with static load is made to DIN 2413-I with yield point K=235N/mm2.
For tubes with external/internal diameter ratio >1.35 calculation is made to DIN 2413-III but with yield point K=235N/mm2.
The calculation of pressures with dynamic stress is made to DIN 2413-III with permanent fatigue strength K=226N/mm2.
Safety factor S=1.5. Allowance factor c=0.8 for diameter tube 4mm, c=0.85 for diameter tube 6-8mm, c=0.9 for diameter tube >8mm.
Corrosion: additional allowance are not considered for calculation of pressures.

• ALLOWED STAINLESS STEEL TUBES ON ALL SERIES

• For steel tubes in stainless steel we advise to use calibrated seamless cold drawn without welding tubes 1.4571 as per DIN 17458 or ASTM A269.

• Maximum allowed hardness on the outside diameter of the tube is 85 HRB.

• The indicated pressure are to be intended on a constant pressure rate and with temperatures between -60° and +200° degrees Celsius.

ØTube mm	Tolerance mm	Thickness mm	Static DIN 2413-I pressure bar	Weight Kg/m
4	±0,1	0,5	326	0,048
4		1	544	0,076
6	±0,1	1	406	0,125
6		1,5	572	0,169
6		2	721	0,200
8	±0,1	1	347	0,225
8		1,5	449	0,244
8		2	572	0,301
8		2,5	686	0,344
10	±0,1	1	294	0,225
10		1,5	389	0,319
10		2	498	0,401
10		2,5	601	0,469
10		3	694	0,526
12	±0,08	1*	245	0,275
12		1,5	368	0,394
12		2	426	0,500
12		2,5	516	0,595
12		3	601	0,676
12		3,5	679	0,745
14	±0,08	1,5	315	0,469
14		2	420	0,601
14		2,5	452	0,720
14		3	529	0,826
14		3,5	601	0,920
15	±0,08	1,5	294	0,507
15		2	392	0,651
15		3	498	0,902
16	±0,08	1,5**	275	0,544
16		2	368	0,702
16		2,5	402	0,845
16		3	471	0,977
18	±0,08	1,5*	245	0,619

ØTube mm	Tolerance mm	Spessore mm	Static DIN 2413-I pressure bar	Weight Kg/m
18	±0,8	2	326	0,801
18		2,5	409	0,971
18		3	426	1,128
20	±0,8	2**	294	0,902
20		2,5	368	1,095
20		3	389	1,277
20		3,5	444	1,446
20		4	498	1,602
22	±0,8	2*	267	1,001
22		2,5	334	1,220
22		3	401	1,427
25	±0,08	2*	236	1,151
25		2,5	294	1,408
25		3	352	1,653
25		4	411	2,104
25		4,5	456	2,310
28	±0,08	2*	210	1,301
28		2,5	263	1,596
28		3	315	1,878
30	±0,08	2**	175	1,402
30		2,5	245	1,721
30		3	294	2,028
30		4	392	2,604
35	±0,15	2*	168	2,222
35		2,5	210	2,034
35		3	252	2,403
35		4	336	3,104
38	±0,15	3**	232	2,628
38		4	310	3,405
38		5	387	4,131
42	±0,2	3	210	2,929
42		4	280	3,806

* Tubes that require support sleeve if used for DIN 2353 applications
** Tubes to be used for ISO 8434-2 / SAE J514 norm only

CALCULATION PRESSURES

The calculation of pressure with static load is made to DIN 2413-I with yield point K=245N/mm2.
For tubes with external/internal diameter ratio >1.35 calculation is made to DIN 2413-III but with yield point K=245N/mm2.
Pressures with dynamic stress according to DIN 2413-III are not listed because in DIN 17458 the permanent fatigue stress K is also not listed.
We recommend for calculation in accordance to DIN 2413 III to assume a value K=190N/mm2.
Safety factor S=1.5, Allowance factor c=0.9.
Corrosion: additional allowance are not considered for calculation of pressures.

• The not sufficient thickness of the tube walls, or the too low longitudinal resistance of the tubes (particularly mild soft steel) may create problems of the cutting ring with the according losses of seals and the drastical decrease of safety factor. While choosing the tube this aspect must be considerate. Is good rule to pick tubes so that the internal flare (decreasing of the internal diameter) do not exceed the 3/10 of a millimeter up to outside diameter of 16mm and 4/10 of a millimeter on higher diameters.

• COMPATIBLE FLUIDS TABLE

The following table resumes, according to the compatibility with the used fluid, the best possible choice as combination between the fitting type of steel (carbon or stainless steel), material of the elastomeric seal (NBR or Viton®) and type of sealing (plain metal to metal or metal plus elastomeric sealing).

Fluid	Carbon steel	Stainless steel	NBR	VITON®
Acetiylen	🟡	🟢	🔴	🔴
Aceton	🟡	🟢	🔴	🔴
Hidrocloric Acid	🔴	🟡	🔴	🟢
Phosphoric Acid	🔴	🔴	🔴	🟡
Nitrico Acid	🔴	🟡	🔴	🟡
Solforic Acid	🔴	🟡	🔴	🟢
Water	🔴	🟡	🔴	🟢
Distilled water	🟡	🟢	🟢	🟢
Sea water	🔴	🟡	🟢	🟢
Hidrogen peroxide	🔴	🟢	🔴	🟢
Turpentine	🟡	🟢	🟢	🟢
Ammonia gas, cold	🟢	🟢	🟢	🔴
Ammonia liquid	🟡	🟢	🟡	🔴
Carbonic dioxide	🟢	🟢	🟢	🟡
Argon	🔴	🟢	🟢	🟢
Air	🟢	🟢	🟢	🟢
Compressed air	🟢	🟢	🟢	🟢
ASTM-Oil, n°1	🟢	🟢	🟢	🟢
ASTM-Oil, n°2	🟢	🟢	🟢	🟢
ASTM-Oil, n°3	🟢	🟢	🟢	🟢
Nitrogen	🟢	🟢	🟢	🟢
Benzene	🟢	🟢	🔴	🟢
Sulfur oxide	🔴	🟢	🔴	🟢
Carbon bisolfure	🟢	🟢	🔴	🟢
Butane	🟢	🟢	🟢	🟢
Clorine	🔴	🟢	🔴	🟢
Helium	🟢	🟢	🟢	🟢
Etane	🟢	🟢	🟢	🔴
Ether	🟢	🟢	🟢	🔴
Combustibile gas	🔴	🟢	🟢	🟡
Natural gas	🟢	🟢	🟢	🟢
Natural gas untreated	🟢	🟢	🔴	🔴
Diesel fuel	🟢	🟢	🟢	🟢
Glycerin	🟡	🟢	🟢	🟢
Glycol	🟢	🟢	🟢	🟢
Hidrogen	🟢	🟢	🟢	🟢
Iodine	🔴	🟢	🟡	🟢
Kerosene	🟢	🟢	🟢	🟢
Methane	🟢	🟢	🟢	🟢
Methanol	🟢	🟢	🟢	🟢
Fuel oil	🟢	🟢	🟢	🟢

Fluid	Carbon steel	Stainless steel	NBR	VITON®
Neon	🔴	🟢	🟢	🟢
Oil	🟢	🟢	🟢	🟢
Heating fuel oil	🟢	🟢	🟢	🟢
Automotive brake fluid	🟢	🟢	🔴	🔴
Transmission fluid	🟢	🟢	🟢	🟢
Mineral oil	🟢	🟢	🟢	🟢
Natural mineral oil	🟢	🟢	🟡	🟢
Hydraulic oil	🟢	🟢	🟢	🟢
Vegetable oil	🟢	🟢	🟢	🟢
Carboni monoxide	🟢	🟢	🟢	🟢
Oxygen	🔴	🟢	🔴	🔴
Ozone	🟢	🟢	🔴	🟢
Pentane	⚪	🟢	🟢	🟢
Pentane liquid	⚪	🟢	🟢	🟢
Propane	🟢	🟢	🟢	🟢
Silicone	🟢	🟢	🟢	🟢
Styrol	⚪	🟢	🟡	🟢
Toluol	🟢	🟢	🔴	🟡
Trichloroethylene	🔴	🟡	🔴	🟡
Steam	🟡	🟢	🔴	🔴
Xylol	🟢	🟢	🔴	🟢

Legenda

🟢 = Sufficient
🟡 = Scarce
🔴 = Not recommended
⚪ = Not sufficient data

VITON® is a DuPont Dow Elastomers Trade Mark

PRESCRIPTIONS TO COMPLY WITH ON ALL SERIES

• Use only CAST S.p.A. components for the same assembly
• Apply completely the General Instructions, Utilization Norms, Safety Factors, Assembly Instruction and Working Pressures for the specific fitting is used.
• Respect the working temperature rates and temperature related pressure rate reduction, if any.
• Respect the indicated tightening values as well as the assembly instructions.
• Lubricate all the components, as indicated in the assembly instructions, with specific products.
• All tubes must be properly pre-assembled or flared before being assembled on machine board. Is not allowed to pre-assemble directly on machine board.
• All stainless steel parts must be assembled on hardened tools and all stainless steel tubes must be properly pre-assembled or flared before being assembled on machine board. Is not allowed to preassemble directly on machine board.
• Use only high quality carbon and stainless steel tubes as per our indication on pages 14 and 15.
• Use support sleeves on thin tubes.
• Is not allowed to mix different materials (carbon and stainless steel) in the same connection.
• Always check the correct alignment of the system.
• Always check the correct incision of the cutting ring on the tube.
• Is not allowed, in any case, to use non conform tubes or fittings, as well as is not allowed to make non conform assembly.
• Is not allowed to alter in any way CAST S.p.A. products.
• Fully comply to all technical information indicated in this catalogue.
• In case of doubt always refer to the prudence concept.

Not following any of these prescription may alter greatly the functionality of the products causing problems to the system, and the immediate loss of all products guarantees.

• PRODUCT LIABILITY

73. D.P.R. 224-CEE 85/347 states that " ... the responsibility will be charged to the negligent part ... "
This means that the manufacturer will be held responsible if, and only if, the product was effectively faulty.
The distributor that has done the final sale shall check, under its own responsibility, that its final customer was well aware of all technical problems inherent to the product used such as assembly instructions, and that the product was used for the right application.
On the same line the end user will be considered responsible part if did not follow completely the written prescriptions of the manufacturer (General Catalogue) that must be notified to him by the part doing the sale. Should the end user be short of this technical documentation CAST S.p.A. will be glad to send it directly.
In view of this European norm CAST S.p.A. declines any responsibility in the case which the user fails to comply strictly and entirely with the General Instruction, Utilization Norms, Safety Factors, Assembly Instruction and Working Pressures as any other technical information clearly indicated in this General Catalogue as failure to these prescriptions may affect the functional safety of the products and results in voiding the user's warranty rights.
As per the quoted norm there is a € 500,00 franchise.

B 3

STANDARD DOUBLE CUTTING EDGE RING ASSEMBLED ON ALL CAST PRODUCTION ASSURES SEALING AND SAFETY

AVAILABLE IN CARBON AND STAINLESS STEEL

THEORY OF OPERATION

The Cast fitting, manufactured according to ISO 8434-1/DIN 2353 norm is a mechanical fitting with a double cutting ring for double stapling on the tube.
The ring helps fast assembly of removable tubes, avoids welding, tapping and flaring, thus assuring maximum simplicity of complex oleo-dynamic systems.
During tightening by the nut, the ring deforms according to the bore of the 24° cone of the fitting and bites into the steel tube, producing two deep cuts the first of which is visible due to lifting of an outer edge on the diameter of the tube, allows the water tightness and anti-unthreading of the ring. The second groove (invisible) balances the forces on the whole ring, prevents vibrations to reach the first groove and stops the stapling of the tube at a predetermined value.

COUPLING SYSTEM DIN 2353

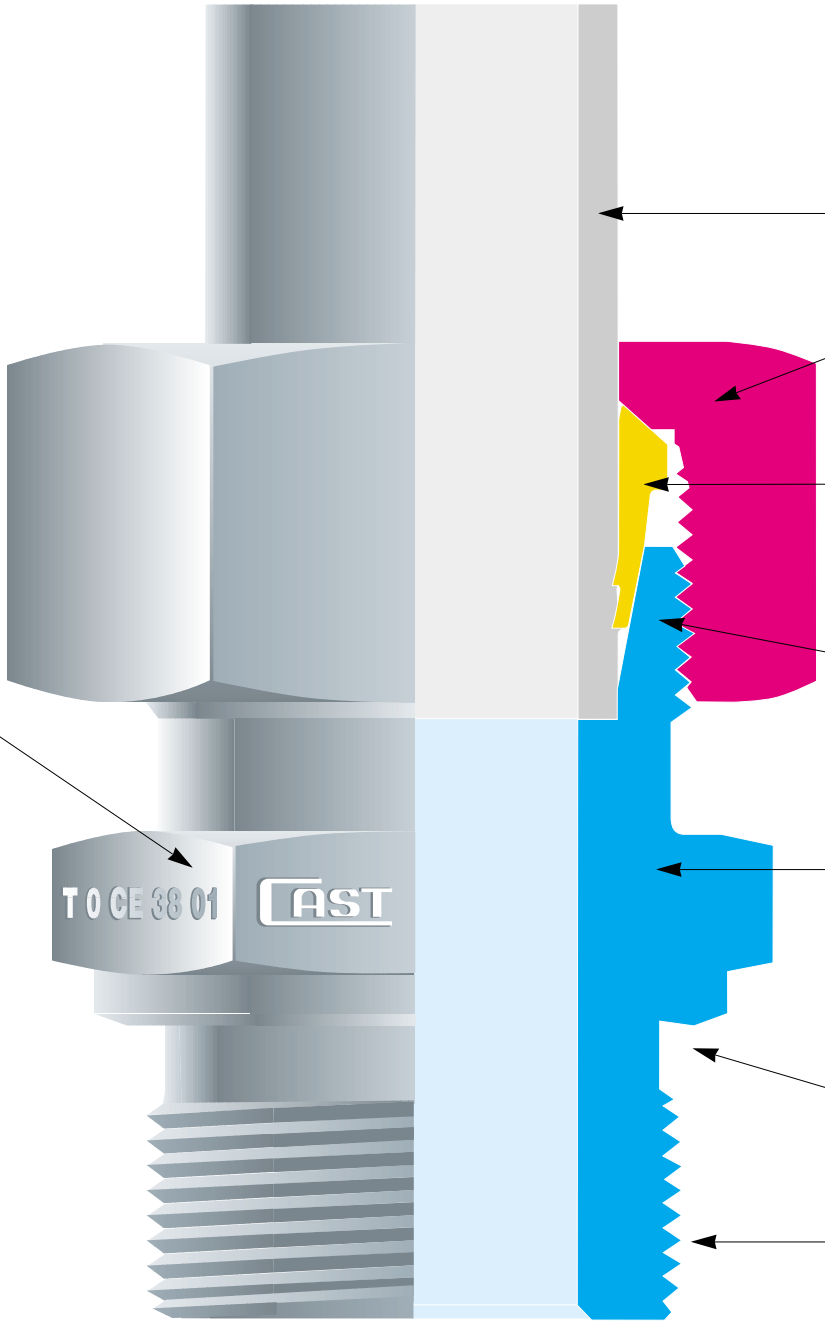

Reference prescriptions:

ST 37.4 tube
DIN 1630-2391

Nut
DIN 3870

Cutting ring
DIN 3861-B

Shape of housing
DIN 3861

Fitting body
DIN 3901

Metal to metal seal
DIN 3852-1B/2B

Threaded end
DIN 3852

Traceability decoding

CAST =
Manufacturer

- T =
Production plant
- 0 =
Year manufactured
- CE =
Made in EEC
- 38 =
Type of steel used
- 01 =
Heat number of the steel used

TECHNICAL CHARACTERISTICS

The Cast fitting assures a perfect seal, independently from the fluid used, provided that no corrosive fluids be employed and the nominal pressures not be trespassed. Fittings are manufactured in three ranges to be chosen according to the required working conditions.
"LL" extra light range, suitable for low and medium working pressures up to 100 bar.
"L" light range, suitable for medium/high pressure applications, however not over 315 bar.
"S" heavy range, for severe conditions, with high pressures, water hammering, high temperatures and a maximum pressure of 630 bar.
Vibrations according to the standards, don't change the fitting's performance that, even at maximum values keeps its characteristics of absolute reliability.

Before assembly on the metal tube

After assembly on the metal tube

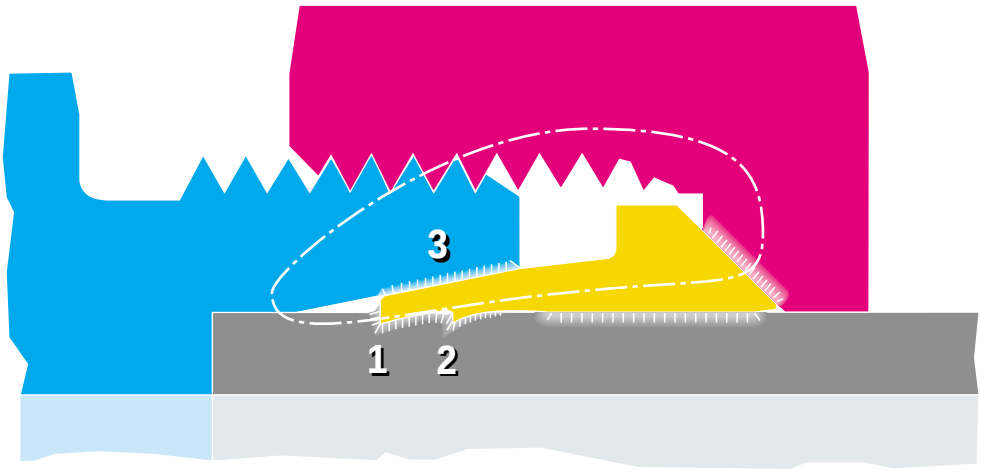

Field of force after assembly
-·-·-·-·-·-

Pressure surfaces after assembly
IIIIIIIIIIIIIIIIIIIIIIIIIIII

Sealing points
1 - 2 - 3

DETAIL OF B3 CUTTING RING SEALING POINTS

Cutting ring: 100110
Tube: Ø22x1,5
Cutting ring assembly: one full turn on fitting body as per DIN 3859-2 norm
Magnifying: Microscope x5
Detail scale: 0,5

SEALING POINT 1 – FIRST CUTTING EDGE

SEALING POINT 2 – SECOND CUTTING EDGE

SEALING POINT 3 – 24° CONE

B 4

NEW SIX-SEALS CUTTING RING.
INTERNATIONAL INDUSTRIAL PATENT Nr. 864061 of the 10/03/99
FLANKS AND DOES NOT REPLACE THE STANDARD RING CURRENTLY IN USE

AVAILABLE IN CARBON AND STAINLESS STEEL

THEORY OF OPERATION

The “B4” is a highly innovative, deformable, double clinching, double edge ring with double elastomer seal that is assembled according to well-known techniques and is perfectly interchangeable with all types of rings used on 24° cone fittings complying with the ISO 8434-1/DIN 2353 standards.
The ring helps fast assembly of removable tubes, avoids welding, tapping and flaring, thus assuring maximum simplicity of complex oleo-dynamic systems.
During tightening by the nut, the ring deforms according to the bore of the 24° cone of the fitting and bites into the steel tube, producing two deep cuts the first of which is visible due to lifting of an outer edge on the diameter of the tube, allows the water tightness and anti-unthreading of the ring. The second groove (invisible) balances the forces on the whole ring, prevents vibrations to reach the first groove and stops the stapling of the tube at a predetermined value.

COUPLING SYSTEM DIN 2353

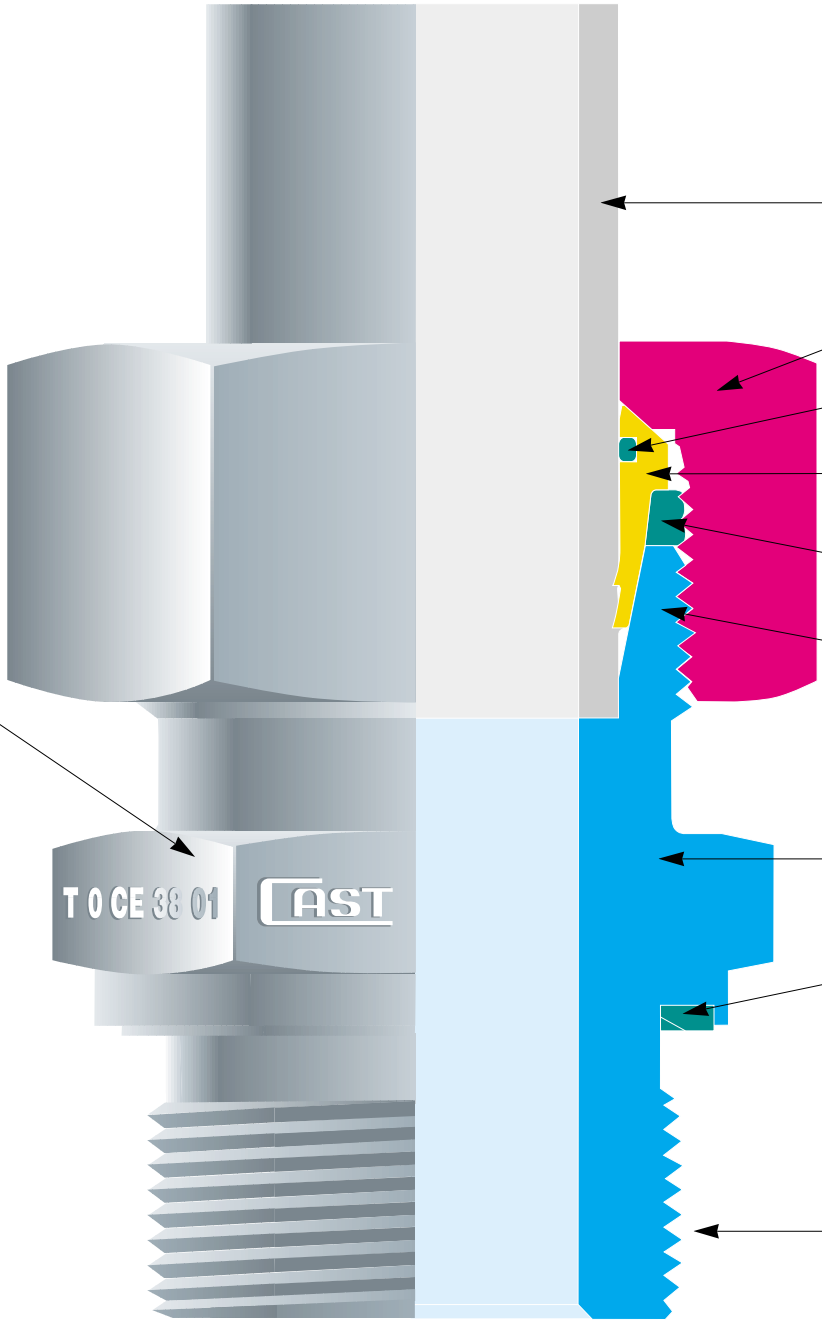

Reference prescriptions:

- ST 37.4 tube DIN 1630-2391
- Nut DIN 3870
- O-Ring CAST
- Cutting ring DIN 3861-B
- Flat washer seal CAST
- Shape of housing DIN 3861
- Fitting body DIN 3901
- Flat washer housing DIN 3852-11E
- Threaded end DIN 3852

Traceability decoding

CAST = Manufacturer

- T = Production plant
- 0 = Year manufactured
- CE = Made in EEC
- 38 = Type of steel used
- 01 = Heat number of the steel used

TECHNICAL CHARACTERISTICS

The “B4” ring assures perfect tightness of the circuit regardless of the fluid used provided that corrosive fluids are avoided and the nominal pressures of the fittings are complied with. The fittings on which the “B4” rings are mounted are manufactured in two series that are used according to the operating conditions.
“L” light duty series for applications characterized by medium high pressures, maximum 315 bar.
“S” heavy duty series for harsh applications characterized by high temperatures and a maximum pressure of 630 bar.
“B4” performance is not affected by vibrations within normal limits and the product maintains its optimal characteristics, as an absolutely safe ring, even at maximum values.
When the fitting, ring, nut, tube system is assembled, the flat seal is compressed between the head of the cutting ring and the front of the fitting body. The mechanical pressure applied to the flat seal causes flexure towards the outside, with a consequent increase in diameter. The deformation causes the compressed material of the seal to fill the turns of the thread of the nut free from the closing coupling with the fitting body, assuring locking of the nut and preventing any vibration-induced loosening of this.
When the fitting is disassembled the flat seal goes back to its original shape, without any damage, freeing the nut threads.

Before assembly on the metal tube

After assembly on the metal tube

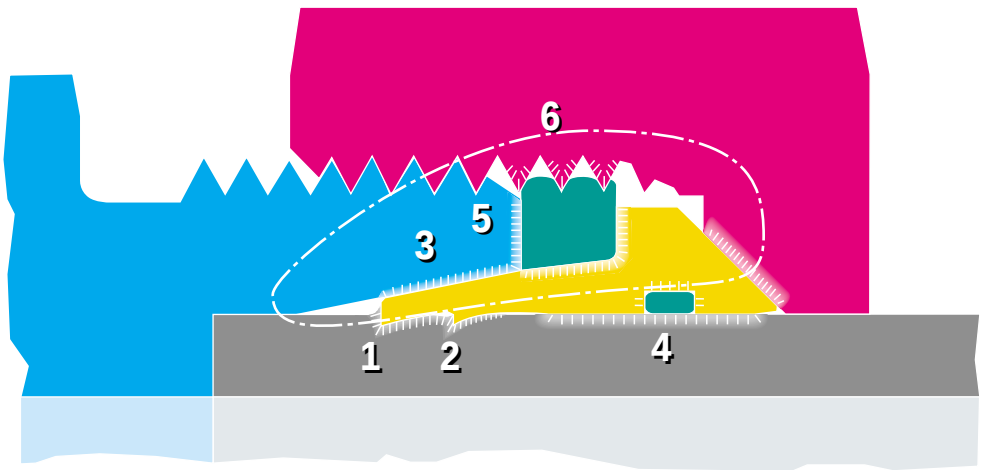

Field of force after assembly
–·–·–·–·–·–

Pressure surfaces after assembly
IIIIIIIIIIIIIIIIIIIIIIIIIIII

Sealing points
1 - 2 - 3 - 4 - 5 - 6

109. DETAIL OF B4 CUTTING RING SEALING POINTS

Cutting ring: 100110.4
Tube: Ø22x1,5
Cutting ring assembly: one full turn on fitting body as per DIN 3859-2 norm
Magnifying: Microscope x5
Detail scale: 0,5

SEALING POINT 1
FIRST CUTTING EDGE

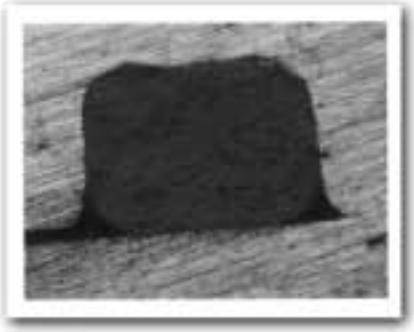

SEALING POINT 4
O-RING

SEALING POINT 2
SECOND CUTTING EDGE

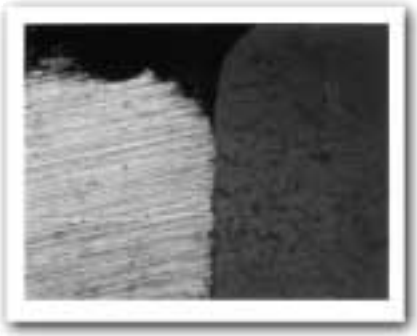

SEALING POINT 5
FLAT WASHER SEAL ON FITTING BODY

SEALING POINT 3
24° CONE

SEALING POINT 6
FLAT WASHER SEAL IN NUT THREADS

TECHNICAL INNOVATION

For many years now, there has been an increasing imperative market demand for fluid system components able to guarantee three main factors: safety, easy assembly, leakage-free tightness.
These elements, now considered essential for safety of the working environment (Law 626/94), product liability (Presidential Decree 224-EEC 85/374) and for the entire environmental protection system have promoted the development of the new “B4” ring as an effective response to all the above-mentioned problems.

PRODUCT CONCEPT

The most original aspect of the product is that the structure of the existing ring has been used, inserting an O-Ring in the inside part to obtain another seal on the tube used and a flat seal on the outer diameter to obtain two additional seals.
The main idea behind the development of the “B4” was to design a new cutting ring able to go one step beyond the known techniques and to solve the problem of minor losses of tightness, leaks, sweating and loosening of the system fastening nut.
With this new ring, the double clinching of the steel tube is still possible and as well as, for obvious reasons of safety, the visual inspection of correct coupling between the ring and the steel tube, maintaining the current, perfectly functional system of assembly that is widely known to product users.

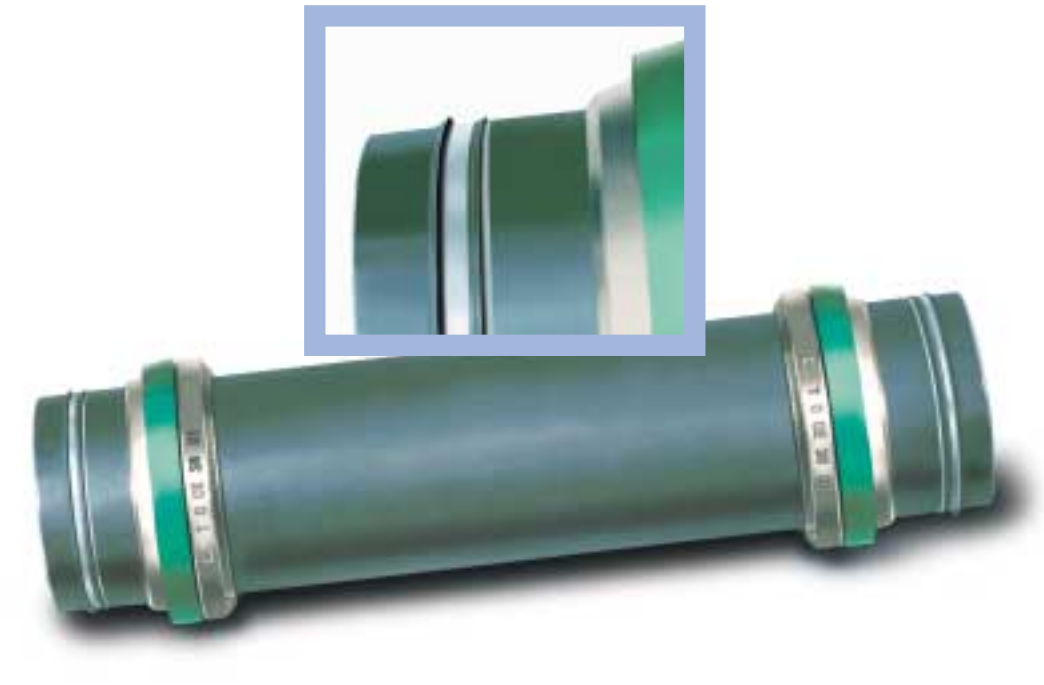

SEALING

“B4” solves the problem of absolute tightness in the following way:

• On the outer diameter of the steel tube, with the double cutting edges and with an O-Ring placed inside the ring that provides a first seal with an elastomeric material that didn’t exist before.

• In the 24° cone of the fitting body, with an increase in the metal-on-metal contact area and with a flat seal, placed statically on the outer diameter of the cutting ring which, when compressed between the head of the ring and the front of the fitting body, provides a second seal with an elastomeric material that didn’t exist before.

• In the thread of the system fastening nut, with the flat seal. When this is compressed between the head of the ring and the front of the fitting body, it fills the threads of the nut that are not engaged in clinching of the coupling system, thus providing a third seal with an elastomeric material that didn’t exist before.

• Basically, the “B4” provides six points of seal of which three metal to metal and three by means of two soft elastomeric seals (the flat seal assures two sealing points) thus obtaining a product able to assure complete tightness without any possibility of leakage even in particularly harsh operating conditions.

GENERAL INSTRUCTIONS FOR B3 AND B4 RINGS

• Before starting the preassembly make sure that the pierce of the machine and the hardened blocks are in perfect working order. Further inspections are necessary during the preassembly (every 30-50 tightenings). For this purpose we advise to use a control buffer 1000… pierce and replace any block out of tolerance.

• Over the whole tightening phase the tube must be in touch with the inner part of the body of the fitting. If this does not happen, the ring will advance with the tube without indenting it, so the coupling would not be functional and it would be necessary to do the operation again. The tube must not turn with the nut during the tightening phase; the capability of the ring to rotate, once the pre-assembly is done, is not a deficiency but is a consequence of the right elasticity of the ring. Always check that the tube be correctly indented. If the indentation does not cover 80% of the ring front side then the assembly is not functional and must be done again. Indicated pressures are for steel tubes only.

• In case thin wall tubes are used, specially mild tubes, or tubes in Rilsan or similar, the assembling is possible, but a suitable reinforcement must be inserted into the end of the tube that is going to be tightened. Without the reinforcement it is not possible to operate with the above mentioned materials.

• Before assembling the preassembled tube to the equipment it is necessary to check that the tube and the fitting are aligned. Fitting should never be used to correct a wrong alignment or to be a support for the tube. Extremely long tubes or tubes undergoing high stress have absolutely to be fixed by using some support to avoid excessive vibrations that could cause damage to the system.

• The proper lubrication of components involved in the tightening is basic for good working.
We advise to use mineral oils for carbon steel fittings and anti-seizing compound (Nickel basis) for Stainless steel fittings.

• The fittings and the valves in this technical catalogue may the used for fluido-dynamic connections only.

• Is not allowed to mix carbon and stainless steel components.

UTILIZATION STANDARDS FOR B3 AND B4 CUTTING RINGS

CARBON STEEL FITTINGS

• High quality tubes must be employed to assure correct use and related technical performance of carbon steel fitting. Use of tubes without the aforementioned characteristics may seriously impair the efficiency of the fitting. We recommend use of the following tubes only: ST 37.4 steel seamless tubes complying with DIN 1630, inner and outer diameter tolerances as per DIN 2391, maximum permissible hardness, measured on the outer diameter of the tube is 75 HRB.
• All carbon steel tubes with a diameter of more than 10 mm must be pre-assembled using the specific preassembly machine. If this is not available, hardened blocks, to be clamped in vice for manual preassembly, must be used. Remember to oil the thread, nut and ring. If hardened pre-assembly blocks are not available, normal straight fittings can be used. The fitting used once must be replaced at each tightening. During preassembly, pay particular attention to parts such as reducing standpipes and nipples as these are made of raw materials characterized, therefore, by higher resistance compared with the cuts made on annealed tubes. These parts must always be pre-assembled on hardened 24° cones (for all diameters).

STAINLESS STEEL FITTINGS

• High quality tubes must be employed to assure correct use and related technical performance of stainless steel fitting. Use of tubes without the aforementioned characteristics may seriously impair the efficiency of the fitting. We recommend use of the following tubes only: cold drawn seamless tube 1.4571 as per DIN 17458 or ASTM A 269, maximum permitted hardness, measured on the outer diameter of the tube, measured on the outer diameter of the tube is 85 HRB. Electrically welded tubes may be used provided they comply with the mechanical tolerances of the aforementioned standards and related hardness values.

• All stainless steel tubes must be pre-assembled using the specific preassembly machine. If this is not available, hardened blocks must be used for manual preassembly. In this case, make sure that the bench and vice in which the block is clamped are firmly fastened to prevent any possibility of movement caused by the twisting moment applied to the nut during the preassembly phase. Assembly or preassembly operations directly on the fitting are not allowed.

QUALITY ASSURANCE ACCORDING TO UNI EN ISO 9001

The Quality Assurance System complies with UNI EN ISO 9001, certificate (N°90/94) issued by the RINA certification authority recognized by IQNET at European level.
CAST S.p.A. has also obtained the DVGW product omologation for stainless steel fittings, and DNV product omologation for carbon and stainless steel fittings with B3 and B4 cutting rings.
At the customer's request, our Quality Service will issue certificates of origin for the materials used to manufacture the products delivered.
Our Quality Experts are always ready to provide customers with advice, to guide them around our facilities as to provide documentation of the traceability system applied.

COMPONENT TESTING

In addition to the normal dimensional checks carried out during machining, percentage inspections of the finished product, practical tightness and fatigue tests, coupling tests between the various parts are also carried out on CAST fittings. At the customer's request, our Product Test and Inspection Service issues the certificate of the tests carried out: dimensional and geometrical tests, checking of static seal at low and high pressure, dynamic seal at high pressure (maximum operating pressure + 33%) as per ISO 8434-5.
If required by the customer, tests can be carried out by various Third Party Authorities including: RINA – DVGW – Lloyd's Register of Shipping – Det Norske Veritas – Germanischer Lloyd – American Bureau of Shipping (to be specified on the order).

SAFETY FACTORS

• B3 and B4 rings provide the right answer to safety problems so that absolute functional reliability between the ring, the steel tube and the fitting body is guaranteed by the double clinching and automatic locking of the cuts on the steel tube (assured by the particular shape of the ring).

• CAST's product range fully complies with the construction parameters of reference standards.

• The nominal operating pressures (bar) given in the catalogue indicate the maximum permissible pressures (including pressure peaks). For higher pressure the items must be tested in accordance with the manufacturer for specific applications.

• The safety factor is 4:1 and is intended with static load and with the temperature at the values indicated as per DIN 3861 (24° cone) for tube connection. The same safety factor 4:1 is intended for parallel threaded end fittings with elastomeric seal. For stud couplings with taper or parallel threaded end fittings with metal to metal seal safety factor is 2,5:1.

• Is understood that the product is guaranteed only if the full connection is made entirely with CAST S.p.A. products and components.

Destructive testing with 28x2 carbon steel tube
The tube burst at 650 bar without any leakages or sweating from the sealing points

STUD ENDS DIN 2353 WITH BSPP THREAD

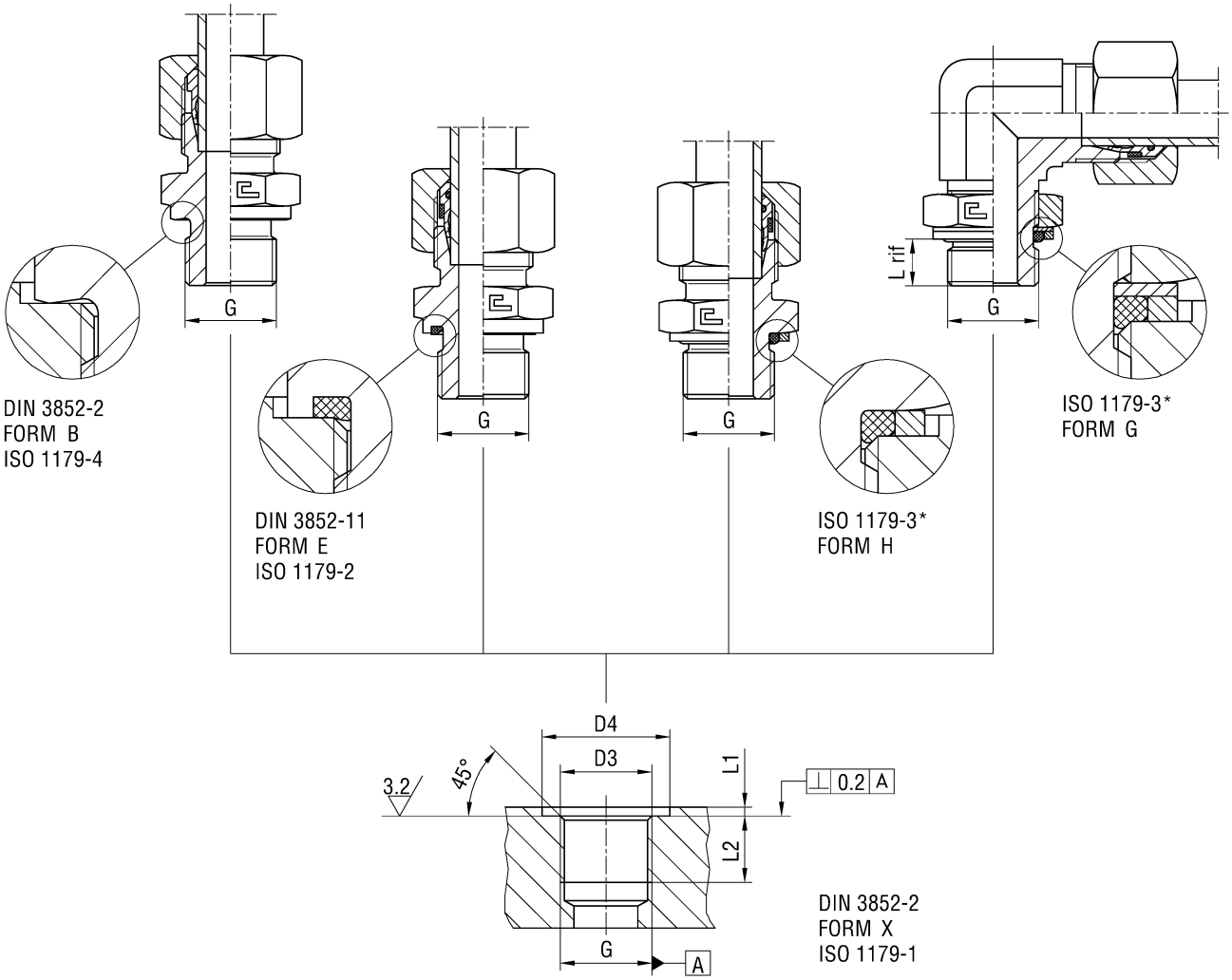

Serie	ØTube	BSPP Thread	D3	D4 min form B/E	D4 min form G/H	L1 max	L2 min	L rif	Torque (Nm) form B	Torque (Nm) form E	Torque (Nm) form H	Torque (Nm) form G
L	6	G 1/8	9,8	15	17,2	1	8	7,5	20	20	20	20
	8	G 1/4	13,2	20	20,7	1,5	12	10,2	45	45	45	45
	10	G 1/4	13,2	20	20,7	1,5	12	10,2	45	45	45	45
	12	G 3/8	16,7	23	24,5	2	12	10,4	70	70	70	70
	15	G 1/2	21	28	29,6	2,5	14	13,1	130	85	85	85
	18	G 1/2	21	28	29,6	2,5	14	13,1	130	85	85	85
	22	G 3/4	26,5	33	36,9	2,5	16	13,5	170	170	170	170
	28	G 1	33,3	41	46,1	2,5	18	14,7	330	330	330	330
	35	G 1 1/4	42	51	54	2,5	20	14,7	510	430	430	430
	42	G 1 1/2	47,9	56	60,5	2,5	22	14,7	600	510	510	510
S	6	G 1/4	13,2	20	20,7	1,5	12	10,2	55	55	55	55
	8	G 1/4	13,2	20	20,7	1,5	12	10,2	55	55	55	55
	10	G 3/8	16,7	23	24,5	2	12	10,4	85	80	80	80
	12	G 3/8	16,7	23	24,5	2	12	10,4	85	80	80	80
	14	G 1/2	21	28	29,6	2,5	14	13,1	150	110	110	110
	16	G 1/2	21	28	29,6	2,5	14	13,1	150	110	110	110
	20	G 3/4	26,5	33	36,9	2,5	16	13,5	280	170	170	170
	25	G 1	33,3	41	46,1	2,5	18	14,7	330	330	330	330
	30	G 1 1/4	42	51	54	2,5	20	14,7	510	430	430	430
	38	G 1 1/2	47,9	56	60,5	2,5	22	14,7	680	510	510	510

Performances:	**Sealing form B:**	**Sealing form E:**	**Sealing form H:**	**Sealing form G:**
- Pressure capacity	Good	Excellent	Excellent	Excellent
- Sealing characteristics	Good	Excellent	Excellent	Excellent
- Additional sealing required	no	no	no	no
- Safety factor	2,5:1	4:1	4:1	4:1

*In revision phase

STUD ENDS DIN 2353 WITH METRIC THREAD

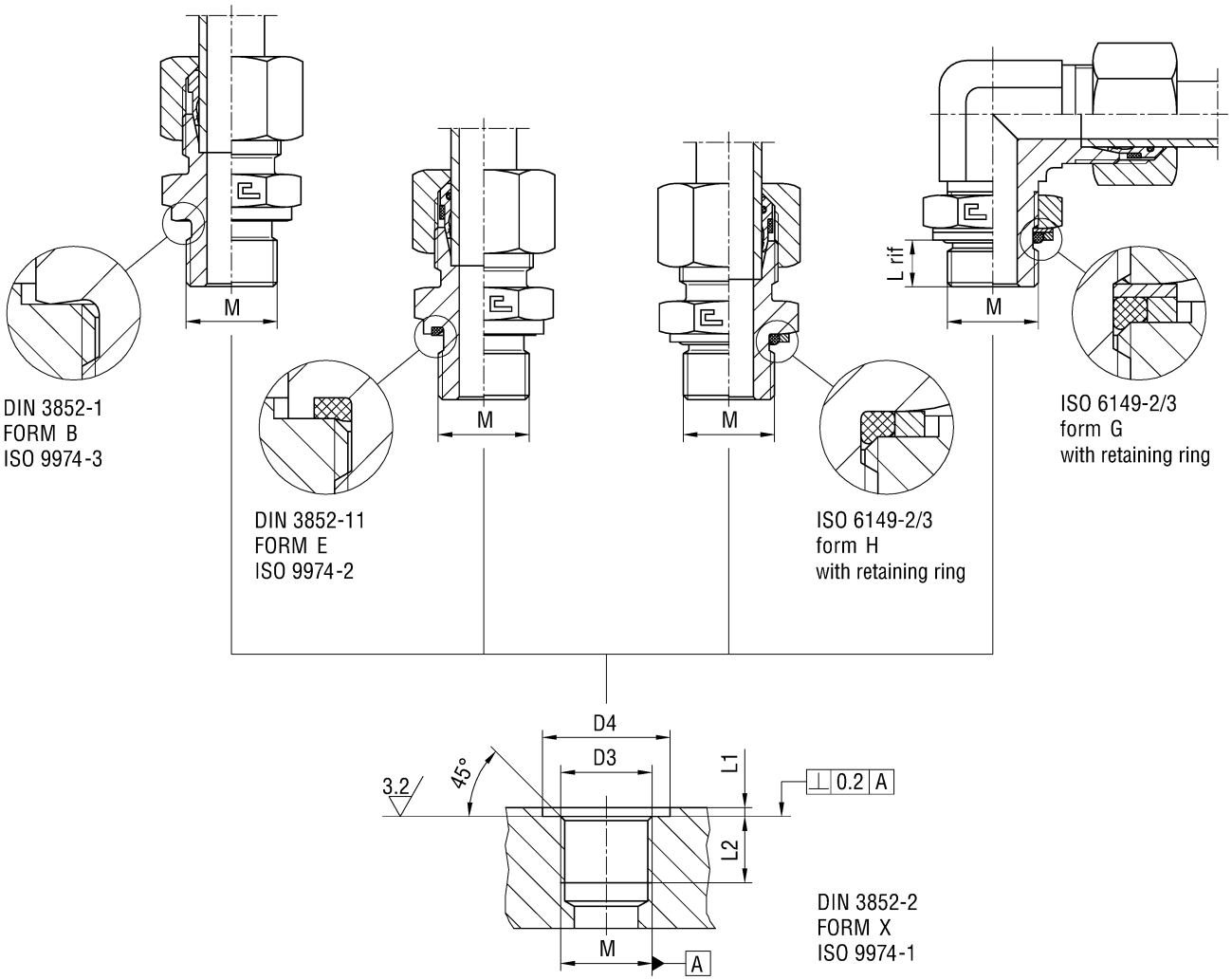

Serie	ØTubo	Metric Thread	D3	D4 min form B/E	D4 min form G/H	L1 max	L2 min	L rif	Torque (Nm) form B	Torque (Nm) form E	Torque (Nm) form H	Torque (Nm) form G
L	6	M10x1	10	15	16	1	8	7,6	20	20	20	20
	8	M12x1,5	12	18	19	1,5	12	9,7	30	30	30	30
	10	M14x1,5	14	20	21	1,5	12	9,7	45	45	50	50
	12	M16x1,5	16	23	24	1,5	12	10,2	60	55	55	55
	15	M18x1,5	18	25	26	2	12	10,9	80	70	70	70
	18	M22x1,5	22	28	29	2,5	14	12	130	120	120	120
	22	M26x1,5	26	33	-	2,5	16	-	180	170	-	-
	22	M27x2	27	33	34	2,5	16	13,8	-	-	170	170
	28	M33x2	33	41	43	2,5	18	13,8	330	330	330	330
	35	M42x2	42	51	52	2,5	20	13,8	470	430	430	430
	42	M48x2	48	56	57	2,5	22	15,3	600	510	510	510
S	6	M12x1,5	12	18	19	1,5	12	9,7	40	40	40	40
	8	M14x1,5	14	20	21	1,5	12	9,7	55	55	55	55
	10	M16x1,5	16	23	24	1,5	12	10,2	80	70	70	70
	12	M18x1,5	18	25	26	2	12	10,9	105	85	85	85
	14	M20x1,5	20	27	27	2	14	12	150	120	120	120
	16	M22x1,5	22	28	29	2,5	14	12	170	130	130	130
	20	M27x2	27	33	34	2,5	16	13,8	200	170	170	170
	25	M33x2	33	41	43	2,5	18	13,8	390	330	330	330
	30	M42x2	42	51	52	2,5	20	13,8	510	430	430	403
	38	M48x2	48	56	57	2,5	22	15,3	680	510	510	510

Performances:	**Sealing form B:**	**Sealing form E:**	**Sealing form H:**	**Sealing form G:**
- Pressure capacity	Good	Excellent	Excellent	Excellent
- Sealing characteristics	Good	Excellent	Excellent	Excellent
- Additional sealing required	no	no	no	no
- Safety factor	2,5:1	4:1	4:1	4:1

STUD ENDS DIN 2353 WITH METRIC THREAD (ISO 6149)

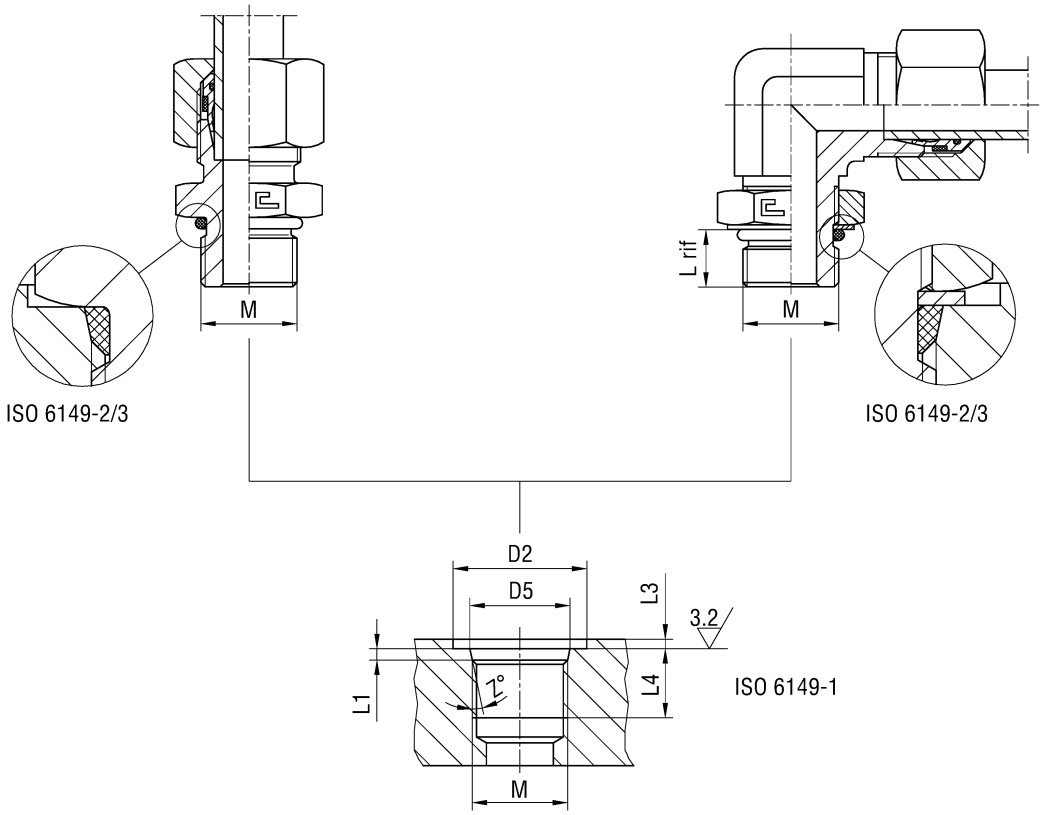

Serie	P max ISO 6149 STRAIGHT	P max ISO 6149 ADJUSTABLE	ØTube	Metric Thread	D2 min	D5	L1	L3 max	L4 min	L rif	Z°	Torque (Nm) ISO 6149 STRAIGHT	Torque (Nm) ISO 6149 ADJUSTABLE
L	315	315	6	M10x1	16	11,1	1,6	1	10	8,6	12	15	15
	315	315	8	M12x1,5	19	13,8	2,4	1,5	11,5	11,1	15	25	25
	315	315	10	M14x1,5	21	15,8	2,4	1,5	11,5	11,1	15	30	30
	315	250	12	M16x1,5	24	17,8	2,4	1,5	13	11,6	15	35	35
	315	250	15	M18x1,5	26	19,8	2,4	2	14,5	12,3	15	40	40
	315	250	18	M22x1,5	29	23,8	2,4	2	15,5	13,4	15	55	55
	160	160	22	M27x2	34	29,4	3,1	2	19	15,8	15	85	85
	160	160	28	M33x2	43	35,4	3,1	2,5	19	15,8	15	140	140
	160	160	35	M42x2	52	44,4	3,1	2,5	19,5	15,8	15	180	180
	160	160	42	M48x2	57	50,4	3,1	2,5	22	17,3	15	230	230
S	630	400	6	M12x1,5	19	13,8	2,4	1,5	11,5	11,1	15	30	30
	630	400	8	M14x1,5	21	15,8	2,4	1,5	11,5	11,1	15	40	40
	630	400	10	M16x1,5	24	17,8	2,4	1,5	13	11,6	15	50	50
	630	400	12	M18x1,5	26	19,8	2,4	2	14,5	12,3	15	60	60
	400	400	14	M20x1,5	27	21,8	2,4	2	14,5	13,4	15	70	70
	400	400	16	M22x1,5	29	23,8	2,4	2	15,5	13,4	15	85	85
	400	400	20	M27x2	34	29,4	3,1	2	19	15,8	15	150	150
	400	315	25	M33x2	43	35,4	3,1	2,5	19	15,8	15	260	260
	250	250	30	M42x2	52	44,4	3,1	2,5	19,5	15,8	15	280	280
	250	200	38	M48x2	57	50,4	3,1	2,5	22	17,3	15	360	360

Performances:	**STRAIGHT sealing:**	**ADJUSTABLE sealing:**
- Pressure capacity	Excellent	Excellent
- Sealing characteristics	Excellent	Excellent
- Additional sealing required	no	no
- Safety factor	4:1	4:1

N.B. To obtain the ISO 6149 type of sealing please take out the retaining ring from the standard fitting.

STUD ENDS DIN 2353 WITH UNF/UN-2A THREAD

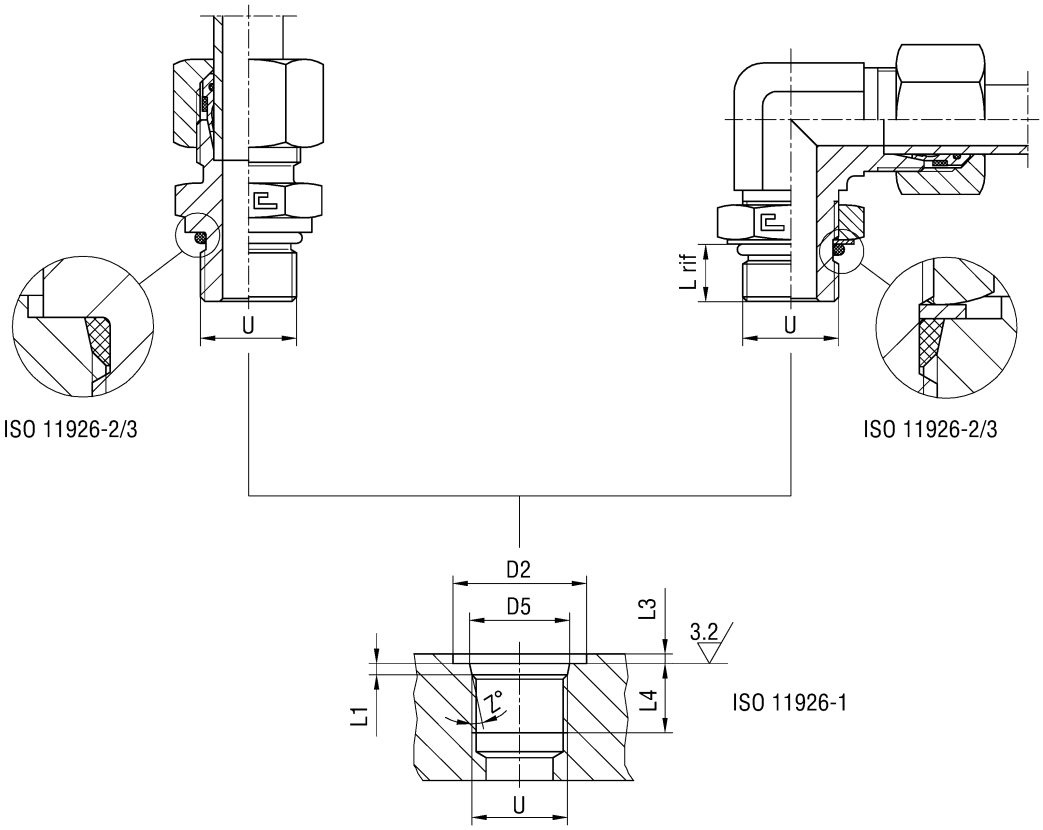

Serie	ØTube	UNF/UN-2A Thread	D2 min	D5	L1	L3 max	L4 min	L rif	Z°	Torque (Nm) STRAIGHT	Torque (Nm) ADJUSTABLE
L	6	7/16-20 UNF-2A	21	12,45	2,4	1,6	11,5	9,9	12	20	20
	8	1/2-20 UNF-2A	23	14,05	2,4	1,6	11,5	9,9	12	25	25
	10	1/2-20 UNF-2A	23	14,05	2,4	1,6	11,5	9,9	12	25	25
	12	9/16-18 UNF-2A	25	15,7	2,5	1,6	12,7	11,1	12	30	30
	15	3/4-16 UNF-2A	30	20,65	2,5	2,4	14,3	12,5	15	45	45
	18	3/4-16 UNF-2A	30	20,65	2,5	2,4	14,3	12,5	15	45	45
	18	7/8-14 UNF-2A	34	24	2,5	2,4	16,7	14,5	15	55	55
	22	1 1/16-12 UN-2A	41	29,2	3,3	2,4	19	16,8	15	85	85
	28	1 5/16-12 UN-2A	49	35,55	3,3	3,2	19	16,8	15	130	130
	35	1 5/8-12 UN-2A	58	43,55	3,3	3,2	19	16,8	15	170	170
	42	1 7/8-12 UN-2A	65	49,9	3,3	3,2	19	16,8	15	180	180
S	6	1/2-20 UNF-2A	23	14,05	2,4	1,6	11,5	9,9	12	25	25
	8	1/2-20 UNF-2A	23	14,05	2,4	1,6	11,5	9,9	12	25	25
	10	9/16-18 UNF-2A	25	15,7	2,5	1,6	12,7	11,1	12	35	35
	12	9/16-18 UNF-2A	25	15,7	2,5	1,6	12,7	11,1	12	35	35
	14	3/4-16 UNF-2A	30	20,65	2,5	2,4	14,3	12,5	15	60	60
	16	3/4-16 UNF-2A	30	20,65	2,5	2,4	14,3	12,5	15	60	60
	16	7/8-14 UNF-2A	34	24	2,5	2,4	16,7	14,5	15	85	85
	20	1 1/16-12 UN-2A	41	29,2	3,3	2,4	19	16,8	15	150	150
	25	1 5/16-12 UN-2A	49	35,55	3,3	3,2	19	16,8	15	230	230
	30	1 5/8-12 UN-2A	58	43,55	3,3	3,2	19	16,8	15	250	250
	38	1 7/8-12 UN-2A	65	49,9	3,3	3,2	19	16,8	15	320	320

Performances:	**STRAIGHT sealing:**	**ADJUSTABLE sealing:**
- Pressure capacity	Excellent	Excellent
- Sealing characteristics	Excellent	Excellent
- Additional sealing required	no	no
- Safety factor	4:1	4:1

STUD ENDS DIN 2353 WITH BSPT THREAD
STUD ENDS DIN 2353 WITH NPT THREAD

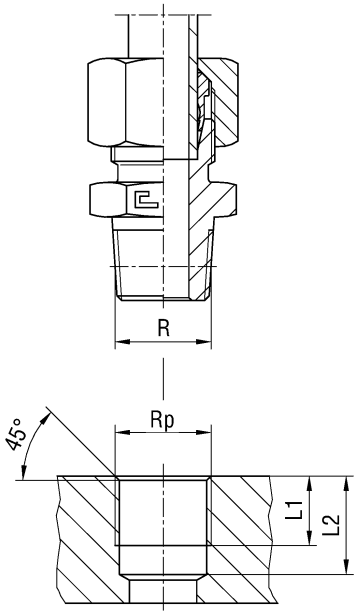

DIN 3852-2
FORM C

DIN 3852-2
FORM Z

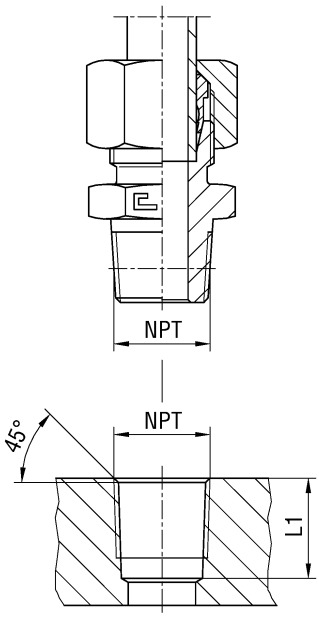

ANSI/ASME B1.20.1

ANSI/ASME B1.20.1

Serie	ØTube	BSPT Thread	L1	L2
L	6	R 1/8	5,5	9,5
	8	R 1/4	8,5	13,5
	10	R 1/4	8,5	13,5
	12	R 3/8	8,5	13,5
	15	R 1/2	10,5	16,5
	18	R 1/2	10,5	16,5
	22	R 3/4	13	19
	28	R 1	-	-
	35	R 1 1/4	-	-
	42	R 1 1/2	-	-
S	6	R 1/4	8,5	13,5
	8	R 1/4	8,5	13,5
	10	R 3/8	8,5	13,5
	12	R 3/8	8,5	13,5
	14	R 1/2	10,5	16,5
	16	R 1/2	10,5	16,5
	20	R 3/4	13	19
	25	R 1	-	-
	30	R 1 1/4	-	-
	38	R 1 1/2	-	-

Serie	ØTube	NPT Thread	L1
L	6	1/8-27 NPT	11,6
	8	1/4-18 NPT	16,4
	10	1/4-18 NPT	16,4
	12	3/8-18 NPT	17,4
	15	1/2-14 NPT	22,6
	18	1/2-14 NPT	22,6
	22	3/4-14 NPT	23,1
	28	1-11,5 NPT	27,8
	35	1 1/4-11,5 NPT	28,3
	42	1 1/2-11,5 NPT	28,3
S	6	1/4-18 NPT	16,4
	8	1/4-18 NPT	16,4
	10	3/8-18 NPT	17,4
	12	3/8-18 NPT	17,4
	14	1/2-14 NPT	22,6
	16	1/2-14 NPT	22,6
	20	3/4-14 NPT	23,1
	25	1-11,5 NPT	27,8
	30	1 1/4-11,5 NPT	28,3
	38	1 1/2-11,5 NPT	28,3

Performances:	**Sealing form C:**
- Pressure capacity	Low-Medium
- Sealing characteristics	Low-Medium
- Additional sealing required	yes
- Safety factor	2,5:1

Performances:	**Taper sealing:**
- Pressure capacity	Low-Medium
- Sealing characteristics	Low-Medium
- Additional sealing required	yes
- Safety factor	2,5:1

STUD ENDS DIN 2353 WITH METRIC TAPER THREAD

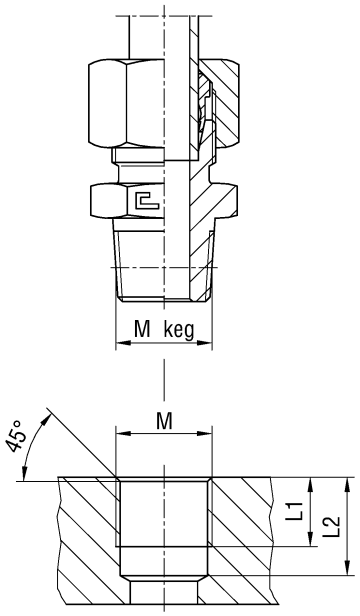

DIN 3852-1
FORM C

DIN 3852-1
FORM Z

Serie	Ø Tube	Metric Taper Thread	L1	L2
L	6	M10x1 keg	5,5	10
	8	M12x1,5 keg	8,5	13,5
	10	M14x1,5 keg	8,5	13,5
	12	M16x1,5 keg	8,5	13,5
	15	M18x1,5 keg	8,5	13,5
	18	M22x1,5 keg	10,5	15,5
S	6	M12x1,5 keg	8,5	13,5
	8	M14x1,5 keg	8,5	13,5
	10	M16x1,5 keg	8,5	13,5
	12	M18x1,5 keg	8,5	13,5
	14	M20x1,5 keg	10,5	15,5
	16	M22x1,5 keg	10,5	15,5

Performances:	**Sealing form C:**
- Pressure capacity	Low-Medium
- Sealing characteristics	Low-Medium
- Additional sealing required	yes
- Safety factor	2,5:1

TIGHTENING TORQUES FOR B3 AND B4 CUTTING RINGS

DIN 3861 cone for carbon and stainless steel

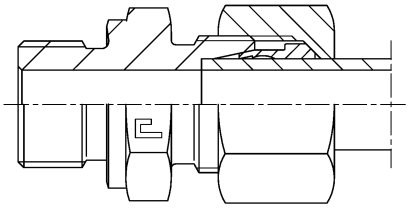

Assembly of B3 cutting ring

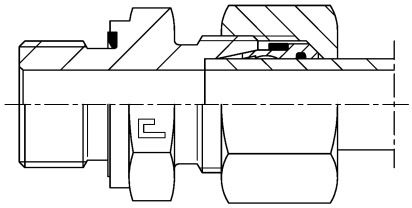

Assembly of B4 cutting ring

Serie	ØTube	Metric Thread	Manual Carbon (Nm)	Manual Stainless (Nm)	Machine Carbon (Kg)	Machine Stainless (Kg)
L	6	M12x1,5	20	30	1200	1400
	8	M14x1,5	25	55	1400	1700
	10	M16x1,5	30	85	2000	2200
	12	M18x1,5	40	120	2100	2400
	15	M22x1,5	60	130	2400	3300
	18	M26x1,5	90	220	2500	3600
	22	M30x2	170	320	2600	3800
	28	M36x2	210	500	3000	6900
	35	M45x2	360	970	5500	10000
	42	M52x2	490	1110	6700	12500
S	6	M14x1,5	25	45	1200	1400
	8	M16x1,5	30	55	1400	1700
	10	M18x1,5	40	90	2000	2200
	12	M20x1,5	50	105	2100	2400
	14	M22x1,5	70	150	2400	3300
	16	M24x1,5	80	180	2500	3600
	20	M30x2	140	340	2600	6400
	25	M36x2	230	530	5000	9300
	30	M42x2	300	610	5500	10000
	38	M52x2	430	850	6700	12500

Notes:

All the values reported in the above tightening tables are mere indication, and come from a series of practical tests carried out in the technical laboratory of Volpiano (TO). These may vary according to the materials and to the tolerances of the employed components.

All the values express in Newton Meters (Nm) for the tightening torques on the cone DIN 3861 threads represent the torquing moment necessary to have the correct incision of the pre-assembly of the tube, lifting the required 80% of the front of the edge of the cutting ring.

All the values expressed in Kilograms (Kg) for the linear push on the preassembly machine, represent the right strength necessary to have the correct incision of the preassembly lifting the required 80% of the front of the edge of the cutting ring.

Once done properly the preassembly and checked that all the components are conforming to the requirements of the system, finish the assembly on the system itself, first closing by wrench until you feel a certain resistance, and then doing the last 1/4 of a turn to close the fitting completely.

SERIES 60… SWIVEL NUT

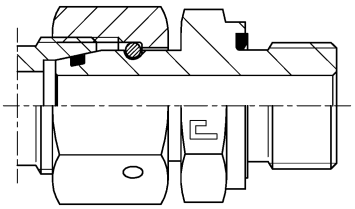

According to DIN 2353 standards, 24° sealing head as per DIN 2861 and O-Ring seal as per DIN 3865.

This series of fittings with revolving nut and seal on the 24° sealing cone guaranteed by an o-ring, meets customers requirements when asking for high pressure, absolute tightness low tightening torque.

Because of its technical characteristics this type of fitting is suitable for demanding applications such as assembly on heavy machinery. The result is a safe fastening of the nut to the body improving the whole sealing system.

The limit of this series was given by the fact that the preformed sealing with o-ring was limited to a single connection, leaving all the others with the old solutions.

A new step forward was needed to improve the research and find a solution that could grant a double sealing system on all the connections involved, metal to metal plus the elastomeric sealing.

This problem has been solved by CAST S.p.A. with the new B4 ring guaranteeing a double sealing, metal to metal plus the elastomeric sealing on all the connections of the fitting.

TIGHTENING TORQUES FOR SWIVEL NUT FITTINGS

DIN 3861 cone for carbon and stainless steel

Serie	ØTube	Metric Thread	Torque (Nm)
L	6	M12x1,5	20
	8	M14x1,5	35
	10	M16x1,5	40
	12	M18x1,5	45
	15	M22x1,5	55
	18	M26x1,5	110
	22	M30x2	130
	28	M36x2	200
	35	M45x2	220
	42	M52x2	240
S	6	M14x1,5	40
	8	M16x1,5	45
	10	M18x1,5	50
	12	M20x1,5	60
	14	M22x1,5	80
	16	M24x1,5	100
	20	M30x2	160
	25	M36x2	240
	30	M42x2	260
	38	M52x2	350

Notes:

All the values reported in the above tightening tables and mere indication, and come from a series of practical tests carried out in the technical laboratory of Volpiano (TO). These may vary according to the materials and to the tolerances of the employed components.

All the values express in Newton Meters (Nm) for the tightening torques, represent the torquing moment necessary to have the correct tightness.

DEFINITION OF CONE SIZE TO DIN 3861 STANDARDS
THREAD DIAMETERS TO DIN 3853 STANDARDS

Allowed for B3 and B4 rings

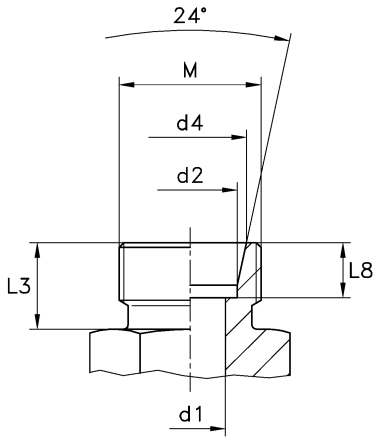

Serie	Bar	ØTube	Metric Thread	d1	$d2^{B11}$	$d4^{+0,1}$	L3	$L8^{+0,3}$
LL	100	4	M8x1	3	4	5	8	4
		6	M10x1	4,5	6	7,5	8	5,5
		8	M12x1,5	6	8	9,5	9	5,5
L	250	6	M12x1,5	4	6	8,1	10	7
		8	M14x1,5	6	8	10,1	10	7
		10	M16x1,5	8	10	12,3	11	7
		12	M18x1,5	10	12	14,3	11	7
		15	M22x1,5	12	15	17,3	12	7
	160	18	M26x1,5	15	18	20,3	12	7,5
		22	M30x2	19	22	24,3	14	7,5
	100	28	M36x2	24	28	30,3	14	7,5
		35	M45x2	30	35	38	16	10,5
		42	M52x2	36	42	45	16	11
S	630	6	M14x1,5	4	6	8,1	12	7
		8	M16x1,5	5	8	10,1	12	7
		10	M18x1,5	7	10	12,3	12	7,5
		12	M20x1,5	8	12	14,3	12	7,5
		14	M22x1,5	10	14	16,3	14	8
	400	16	M24x1,5	12	16	18,3	14	8,5
		20	M30x2	16	20	22,9	16	10,5
		25	M36x2	20	25	27,9	18	12
	250	30	M42x2	25	30	33	20	13,5
		38	M52x2	32	38	41	22	16

SAE J514

THE CAST 37° STANDARDIZED FITTINGS
AN EASY ASSEMBLY
A KNOWN PRODUCT, SAFE AND RELIABLE

AVAILABLE IN CARBON AND STAINLESS STEEL

THEORY OF OPERATION

The CAST S.p.A. fitting according to the norms ISO 8434-2/ SAE J514, is a mechanical fitting traditionally used for high pressure oleo-dynamic systems.
The sealing is made by the contact between two metal surfaces, with no deformation of the single components.
The coupling between the body of the fitting and the flared tube (cone angle 74°) is guaranteed by the tightening nut and by the pressure sleeve on the inside. This allow to realize a fast assembling-disassembling tube making the easiest realization of complex oleo-dynamic systems.

COUPLING SYSTEM SAE J514

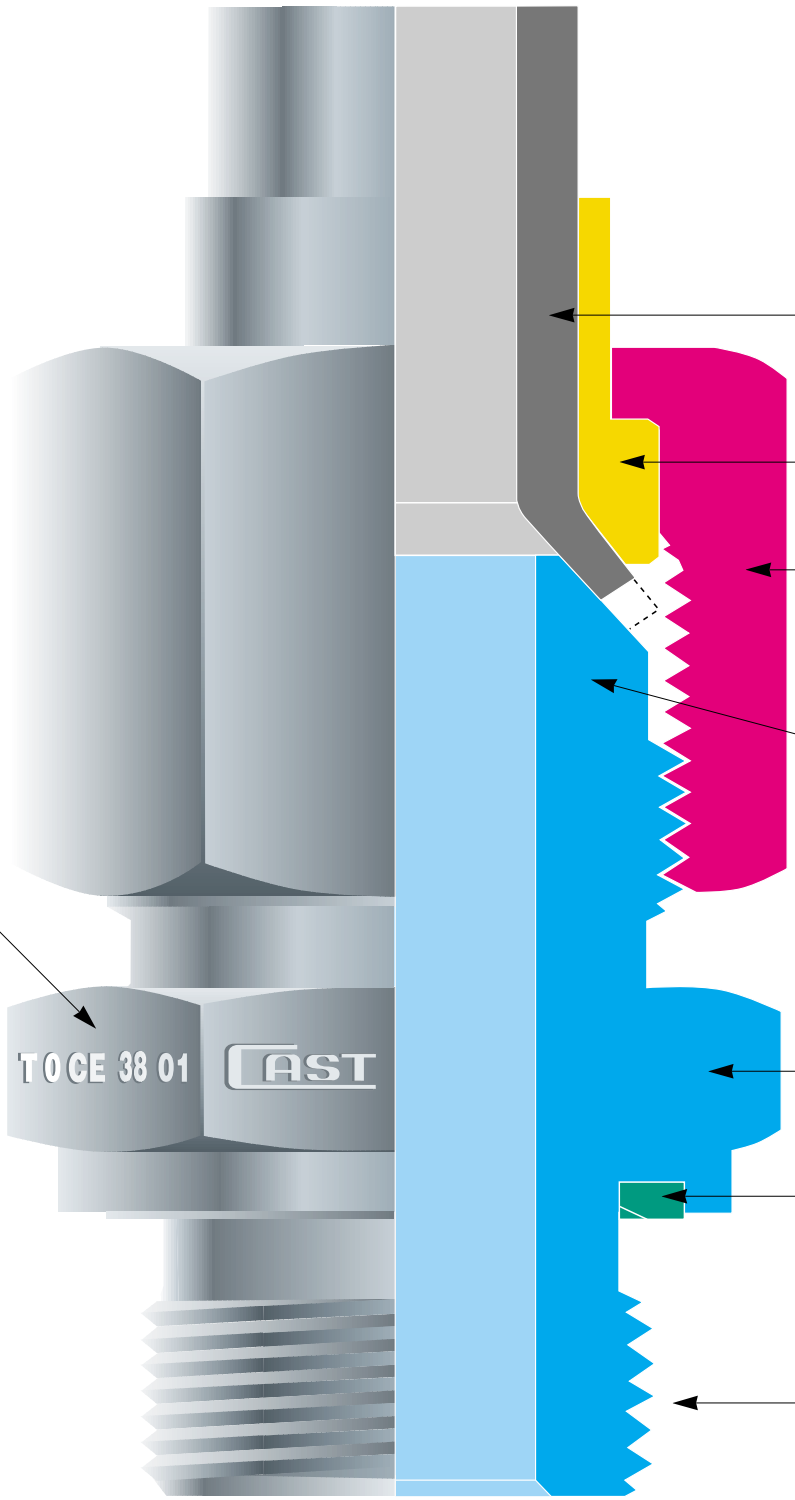

Reference prescriptions:

ST 37.4 tube
DIN 1630-2391

Pressure sleeve
ISO 8434-2/SAE J514

Nut
ISO 8434-2/SAE J514

37° cone

Fitting body
ISO 8434-2

Flat
washer housing
ISO 1179-2.2

Threaded end
ISO 1179-2.2

Traceability decoding

CAST =
Manufacturer

- T =
Production plant
- 0 =
Year manufactured
- CE =
Made in EEC
- 38 =
Type of steel used
- 01 =
Heat number of the steel used

TECHNICAL CHARACTERISTICS

The CAST S.p.A. 37° fitting grants a perfect sealing of the system independently from the used fluid, as long as corrosive fluids are not used and all the specific prescription for this type of fitting are complied with.
These fittings are manufactured in a single series defined "UNIVERSAL" since the body and the nut of the fitting remain the same even when switching from a inches sized tube to a metric tube, and since there are no doubles of diameters with different working pressures.
Vibrations, in the norm, do not alter the functionality of this type of fitting, also at the top level of the quoted values, and therefore keeps the best characteristics of absolute guarantee, safety and reliability. For these specific reasons this fitting may be used in hard working conditions.
Under the mechanical strength given by the tightening of the nut on the fitting body, the flared 37° part of the tube couples with the conical 37° part of the fitting body giving birth to a metal to metal seal.
The pressure sleeve hosted in the inside part of the nut assures the correct alignment of the system diminishing the vibrations and avoiding any possible trouble or damaging of the tube during the assembly phase.

Before assembly on the metal tube

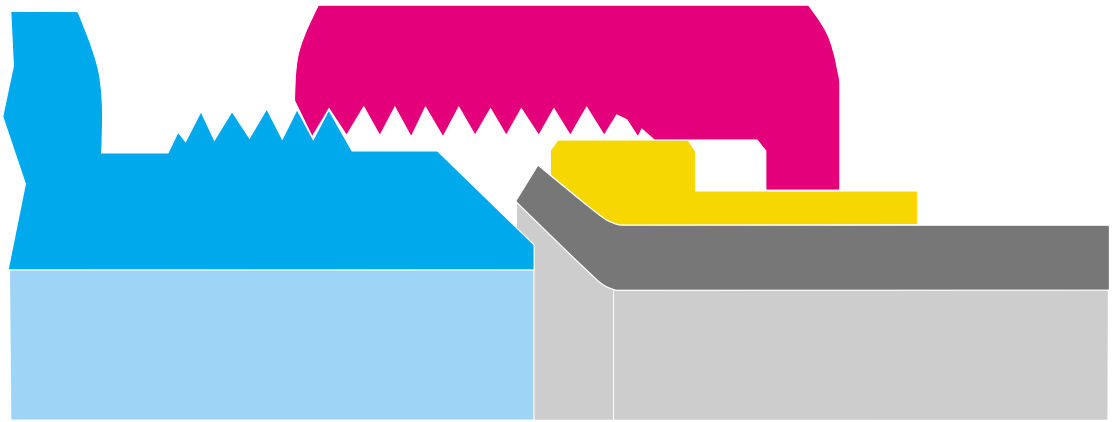

After assembly on the metal tube

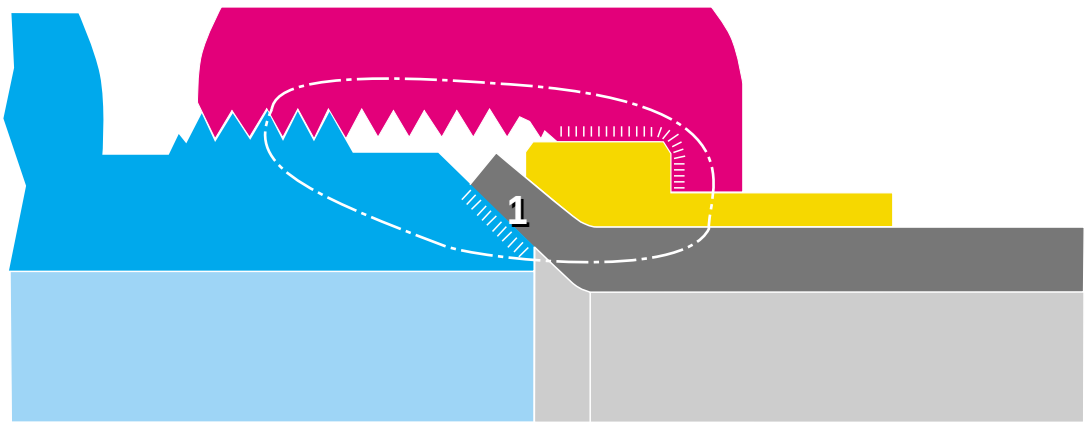

Field of force after assembly
-·-·-·-·-·-

Pressure surfaces after assembly
IIIIIIIIIIIIIIIIIIIIIIIIIIII

Sealing points
1

DETAIL 37° CONE SEALING POINTS

Tube: Ø25x2
Assembly: as per tightening torque indicated on this catalogue (160Nm)
Magnifying: Microscope x5
Detail scale: 0,5

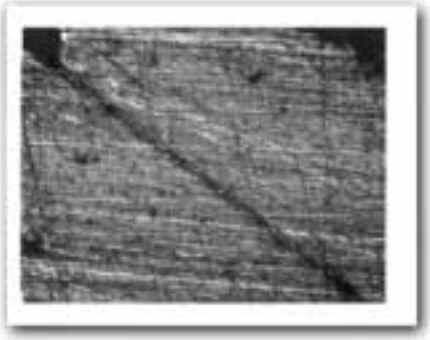

180. SEALING POINT 1 – 37° CONE

PRODUCT MATURITY

For many years now, there has been an increasing imperative market demand for fluid system components able to guarantee three main factors: safety, easy assembly, leakage-free tightness.
These elements, now considered essential for safety of the working environment (Law 626/94), product liability (Presidential Decree 224-EEC 85/374) and for the entire environmental protection system make the 37° flared fitting an effective response to all the above-mentioned problems.

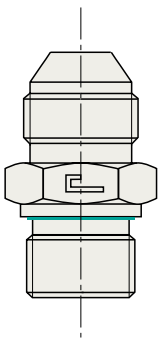

Standard SAE J514 fitting
with no elastomeric
seal available on scheduled
orders only.

SAE J514

THE NEW CAST 37° FITTINGS WITH O-RING
A DRY AS THE DUST SEAL
AN EASY ASSEMBLY
A KNOWN PRODUCT, SAFE AND RELIABLE

AVAILABLE IN CARBON AND STAINLESS STEEL

THEORY OF OPERATION

The CAST S.p.A. fitting according to the norms ISO 8434-2/ SAE J514, is a mechanical fitting traditionally used for high pressure oleo-dynamic systems.
The sealing is made by the contact between two metal surfaces, with no deformation of the single components, plus an elastomeric sealing (O-Ring) placed into a groove on the 37° cone.
Please take note that the elastomeric seal is not included in the quoted norms.
The coupling between the body of the fitting and the flared tube (cone angle 74°) is guaranteed by the tightening nut and by the pressure sleeve on the inside. This allow to realize a fast assembling-disassembling tube making the easiest realization of complex oleo-dynamic systems.

COUPLING SYSTEM SAE J514

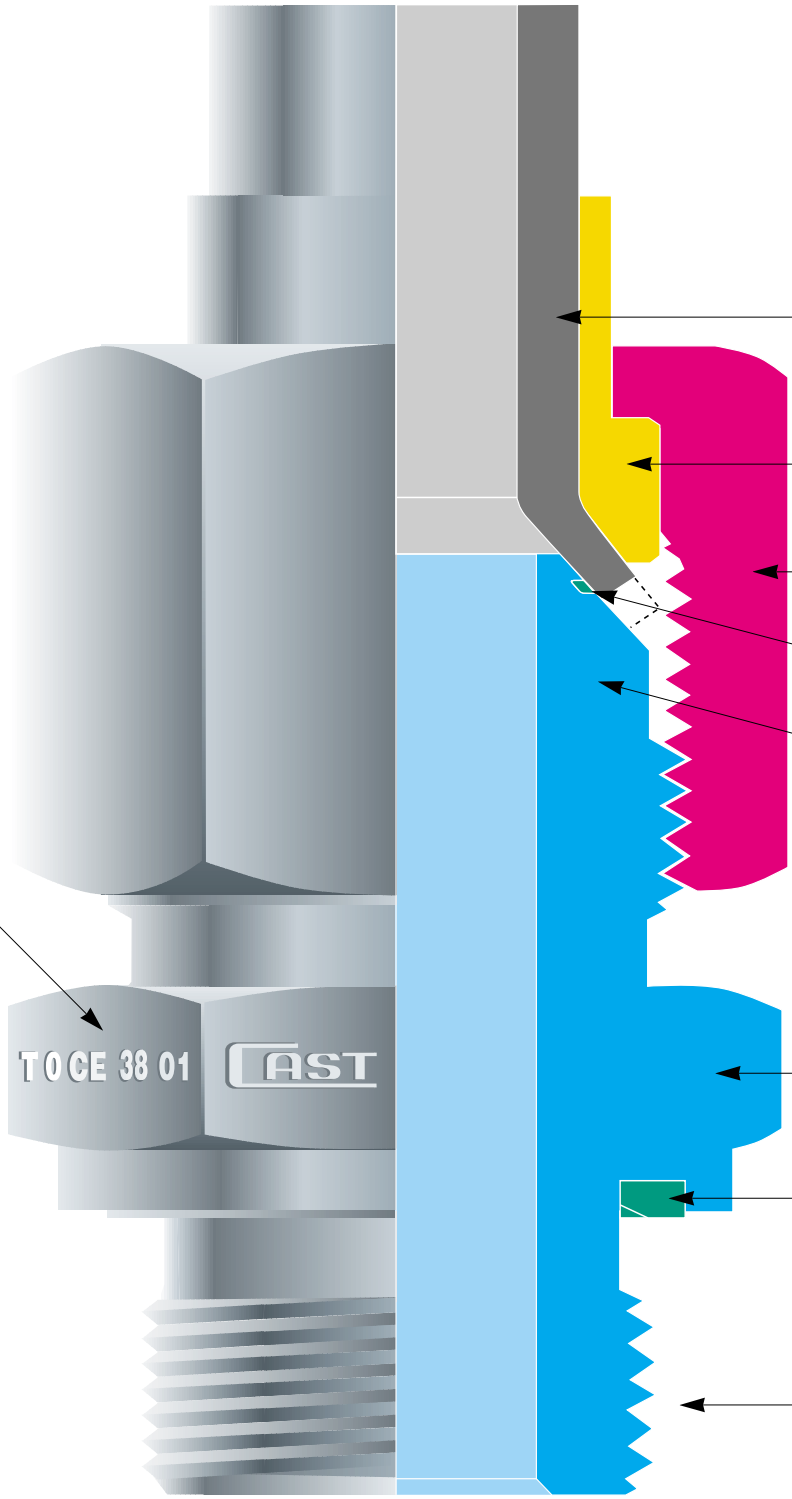

Reference prescriptions:

ST 37.4 tube
DIN 1630-2391

Pressure ring
ISO 8434-2/SAE J514

Nut
ISO 8434-2/SAE J514

O-Ring CAST

37° cone

Fitting body
ISO 8434-2

Flat
washer housing
ISO 1179-2.2

Threaded end
ISO 1179-2.2

Traceability decoding

CAST =
Manufacturer

- T =
Production plant
- 0 =
Year manufactured
- CE =
Made in EEC
- 38 =
Type of steel used
- 01 =
Heat number of the steel used

TECHNICAL CHARACTERISTICS

The CAST S.p.A. 37° fitting grants a perfect sealing of the system independently from the used fluid, as long as corrosive fluids are not used and all the specific prescription for this type of fitting are complied with.
These fittings are manufactured in a single series defined “UNIVERSAL” since the body and the nut of the fitting remain the same even when switching from a inches sized tube to a metric tube, and since there are no doubles of diameters with different working pressures.
Vibrations, in the norm, do not alter the functionality of this type of fitting, also at the top level of the quoted values, and therefore keeps the best characteristics of absolute guarantee, safety and reliability. For these specific reasons this fitting may be used in hard working conditions.
Under the mechanical strength given by the tightening of the nut on the fitting body, the flared 37° part of the tube couples with the conical 37° part of the fitting body giving birth to a metal to metal seal supported by the elastomeric seal as well.
The pressure sleeve hosted in the inside part of the nut assures the correct alignment of the system diminishing the vibrations and avoiding any possible trouble or damaging of the tube during the assembly phase.

Before assembly on the metal tube

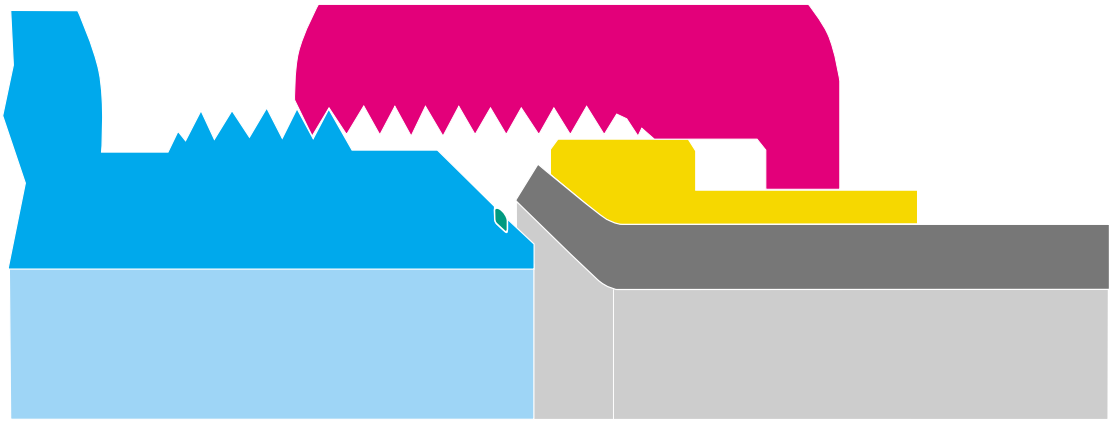

After assembly on the metal tube

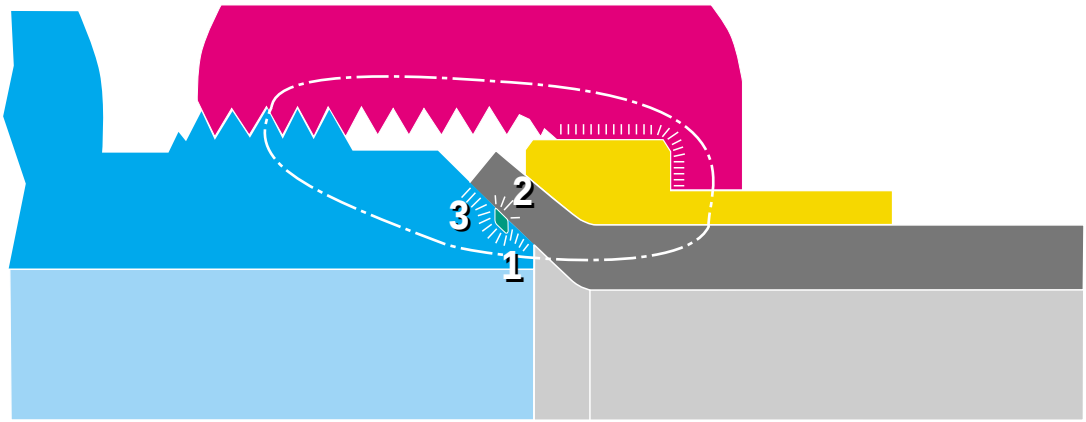

Field of force after assembly
–·–·–·–·–·–

Pressure surfaces after assembly
IIIIIIIIIIIIIIIIIIIIIIIIIIII

Sealing points
1 - 2 - 3

DETAIL 37° CONE SEALING POINTS

Tube: Ø25x2
Assembly: as per tightening torque indicated on this catalogue (160Nm)
Magnifying: Microscope x5
Detail scale: 0,5

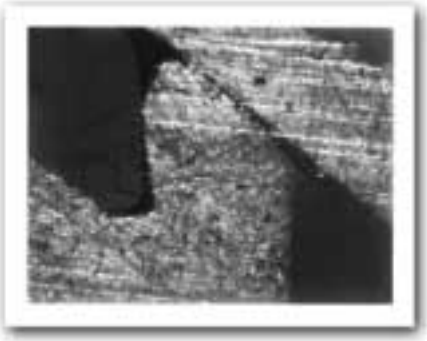

SEALING POINT 1 – 37° CONE

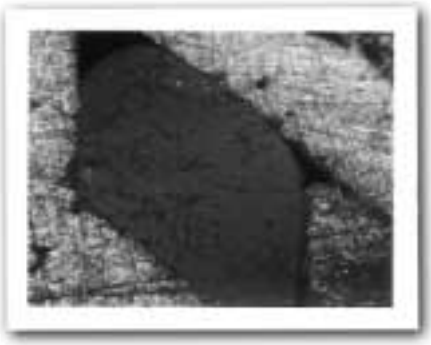

SEALING POINT 2 – O-RING

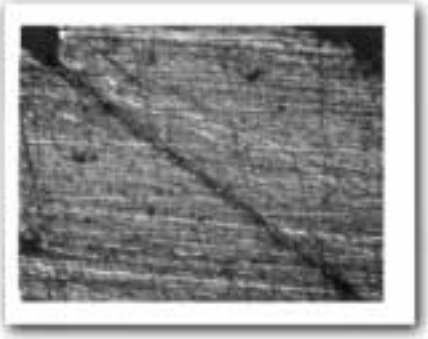

SEALING POINT 3 – 37° CONE

TECHNICAL INNOVATION

Since many years the market has been asking, with increasing strength, for oleo-dynamic components that would join in a single piece the characteristics of safety of blocking, functionality of the assembly and perfect sealing. These elements are now a must for the safety of the environment (Law 626/94) as well as the responsibility of the products (D.P.R. 224 - CEE 85/374), so this has pushed us into the field of research and led us into the realization of this new 37° fitting that solves once and for all the above mentioned problems.

PRODUCT CONCEPT

• The idea has been to use the standard structure of the SAE J514 fitting and to place an additional sealing in the 37° cone (O-ring) so to obtain a safer product.

• The new 37° fitting with elastomeric seal solve the problem of small leakages, typical of a metal to metal sealing system on high pressure fittings.

• However the introduction of the new sealing point has not altered the sealing requirements both, with or without the O-ring, nor limited the performances.

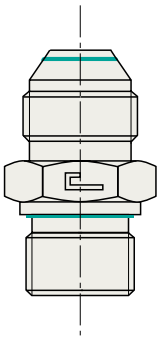

185. The new SAE J514 fitting with elastomeric seal in exception to the quoted norm. Standard product ready on stock

SEALING

The new fitting solve the total sealing problem in the following way:

• On the outside diameter of the 37° cone has been realized a grove as insert place for an O-ring. This elastomeric seal guarantees a perfect sealing at all times.

• The realization of the groove has allowed us to improve the sealing characteristics of the fitting also on the metal to metal sealing, dividing in two different sealing points the metal surface.

• Strenuous tests carried out in our technical laboratory in Volpiano (TO) have made clear, beyond any doubt the reliability of the sealing with or without the O-ring itself.

• Because of that we can affirm that this new type of fitting, used with the additional elastomeric seal will grant a sealing system as dry as the dust.

• If, by any chance, due to high temperatures or particularly hazardous fluids, the O-ring may not be employed, the fitting guarantee as well the perfect sealing with the metal to metal seal.

GENERAL INSTRUCTIONS

• Before start the flaring of the tubes please check that all the tools to be used in the process are conforming to the standards. Check the tools every 30-50 flarings.

• Before fastening the pre-assembled tube to the machine on-board system, check alignment between the tube and the fitting. Fittings must not be used to correct any misalignment or to support tubes. Long tubes or those liable to high stress must be clamped to avoid excessive vibrations. Misalignment may impair system functioning.

• Correct lubrication of the components to be tightened is indispensable for correct functioning of the system: mineral oil for carbon steel fittings, nickel-based anti-seizing compound for stainless steel fittings.

• All the fittings and the valves contained in this catalogue may be used for oleo-dynamic systems only.

• Is not allowed the mixing of different materials.

• The indicated pressures are intended for steel tubes only.

UTILIZATION STANDARDS

CARBON STEEL FITTINGS

• High quality tubes must be employed to assure correct use and related technical performances of carbon steel fittings. Use of tubes without the aforementioned characteristics may seriously impair the efficiency of the fitting. We recommend to use the following tubes only: seamless cold drawn steel tubes as per ST 37.4 complying with DIN 1630, with maximum permissible hardness, measured on the outer diameter of the tube of 75 HRB.

• The flaring of the tube must be made with the flaring machine model 200000 and not with hand tools. It is important that the flaring is concentrical and perpendicular to the tube and ferrule.

• In order to obtain a curve of the tube as close to the tightening point as possible (Fitting body) the structural constructing ties typical of the 37° universal fittings must be considered. This product forces the user to leave a part of the ending section of the tube perfectly parallel. This part must be used during the flaring operation to block the tube. Please refer to the “C” quote.

STAINLESS STEEL FITTINGS

• High quality tubes must be employed to assure correct use and related technical performances of stainless steel fittings. Use of tubes without the aforementioned characteristics may seriously impair the efficiency of the fitting. We recommend to use the following tubes only: cold drawn seamless stainless steel tubes with no welding as per 1.4571 DIN 17458 or ASTM A 269, with maximum permissible hardness, measured on the outer diameter of the tube of 85 HRB.

• The flaring of the tube must be made with the flaring machine model 200000 and not with hand tools. It is important that the flaring is concentrical and perpendicular to the tube and ferrule.

• In order to obtain a curve of the tube as close to the tightening point as possible (Fitting body) the structural constructing ties typical of the 37° universal fittings must be considered. This product force the user to leave a part of the ending section of the tube perfectly parallel. This part must be used during the flaring operation to block the tube. Please refer to the “C” quote.

QUALITY ASSURANCE ACCORDING TO UNI EN ISO 9001

The Quality Assurance System complies with UNI EN ISO 9001, certificate (N°90/94) issued by the RINA certification authority recognized by IQNET at European level.
At the customer's request, our Quality Service will issue certificates of origin for the materials used to manufacture the products delivered.
Our Quality Experts are always ready to provide customers with advice, to guide them around our facilities as to provide documentation of the traceability system applied.

COMPONENT TESTING

In addition to the normal dimensional checks carried out during machining, percentage inspections of the finished product, practical tightness and fatigue tests, coupling tests between the various parts are also carried out on CAST fittings. At the customer's request, our Product Test and Inspection Service issues the certificate of the tests carried out: dimensional and geometrical tests, checking of static seal at low and high pressure, dynamic seal at high pressure (maximum operating pressure + 33% as per ISO 8434-5).
If required by the customer, tests can be carried out by various Third Party Authorities including: RINA – DVGW - Lloyd's Register of Shipping - Det Norske Veritas - Germanischer Lloyd - American Bureau of Shipping (to be specified on the order).

SAFETY FACTORS

• The new 37° fitting solves all the problems of safety since has been carefully designed for that purpose.
• The use of high quality steel tubes in the right wall thickness, make this specific type of fitting particularly safe creating values of highest reliability between the sleeve, the fitting body and the tube, since is the flared part the strong point of this technology.

• CAST S.p.A. production is made in compliance with the reference norm.

• Nominal working pressures indicated in this catalogue are intended as maximums (including pressure peaks). To use this fitting at higher requirements test must be carried out in accordance with the manufacturer.

• The safety factor 4:1 is intended as static test with the temperatures within the given range and complying with all the references contained in ISO 8434-5, as far as tube connection is concerned. Same safety factor 4:1 for parallel stud ends with elastomeric seal. For studs with conical or parallel ends with metal to metal seal the safety factor is 2,5:1.

• Is understood that the product is guaranteed only if the full connection is made entirely with CAST S.p.A. products and components.

Destructive testing with 25x2 carbon steel tube
The tube burst at 800 bar without any leaks or sweating from the seal points.

TIGHTENING TORQUES FOR TUBE ENDS AND SWIVEL NUT FITTINGS

SAE J514 cone for carbon and stainless steel

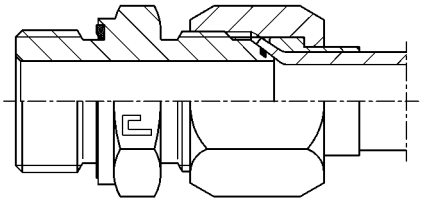

Assembly on tube end

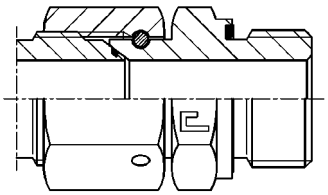

Assembly on swivel nut

Serie	Ø Metric Tube	Ø Inch Tube	NF/UN-2A Thread	Tube side Torque (Nm)	Swivel side Torque (Nm)
UNIVERSAL	6	1/4	7/16-20 UNF-2A	10	20
	8	5/16	1/2-20 UNF-2A	15	25
	10	3/8	9/16-18 UNF-2A	25	35
	12	1/2	3/4-16 UNF-2A	45	60
	14-15-16	5/8	7/8-14 UNF-2A	75	85
	18-20	3/4	1 1/16-12 UN-2A	140	115
	25	1	1 5/16-12 UN-2A	160	230
	30-32	1 1/4	1 5/8-12 UN-2A	240	380
	38	1 1/2	1 7/8-12 UN-2A	400	460

Notes:

All the values reported in the above tightening tables and mere indication, and come from a series of practical tests carried out in the technical laboratory of Volpiano (TO). These may vary according to the materials and of the tolerances of the employed components.

All the values express in Newton Meters (Nm) for the tightening torques on the cone SAE J514, represent the torquing moment necessary to have the correct tightness on the tube end side.

All the values express in Newton Meters (Nm) for the tightening torques on the swivel nut, represent the torquing moment necessary to have the correct fastening of the nut.

STUD ENDS SAE J514 WITH BSPP THREAD

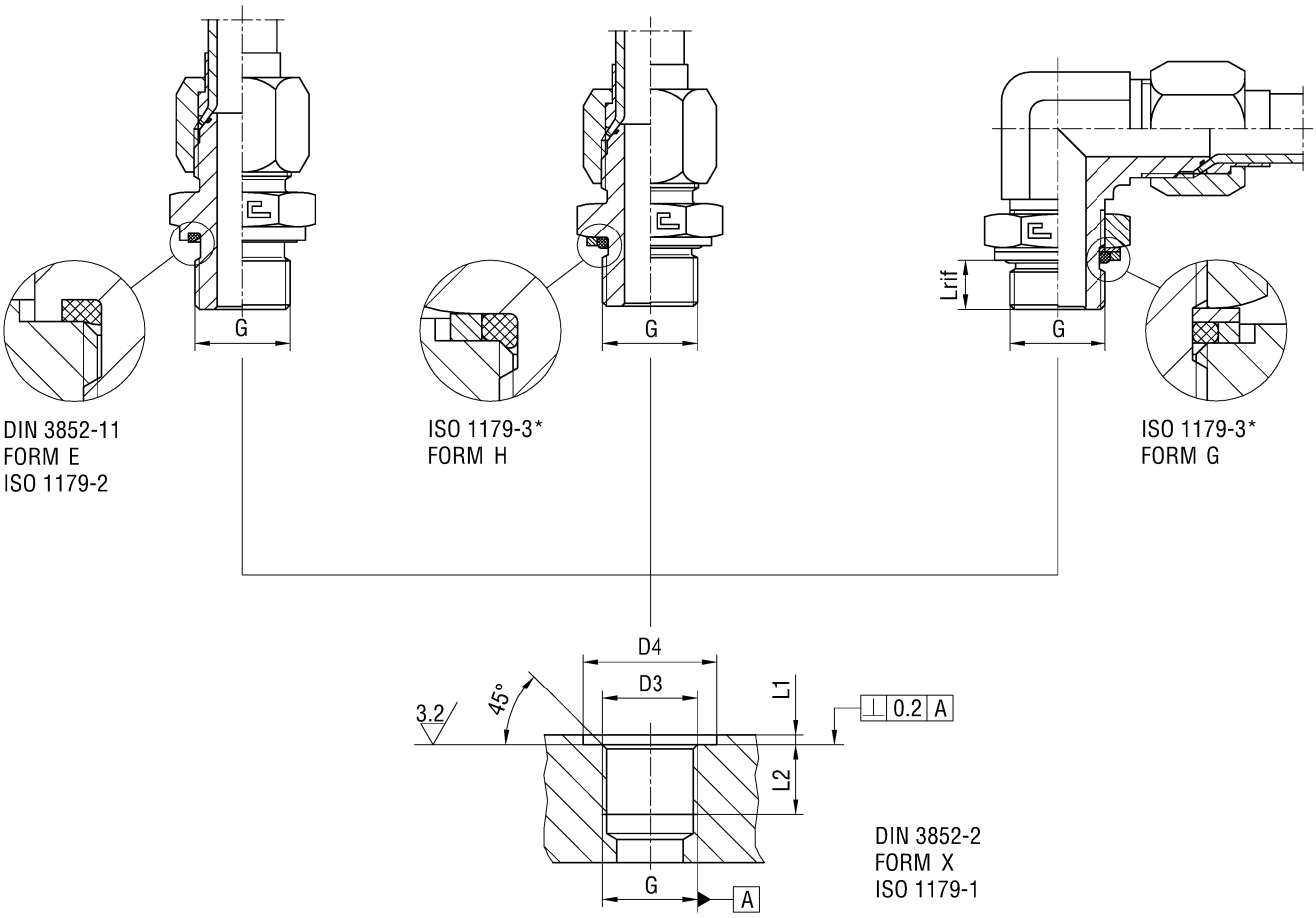

Serie	ØTube	BSPP Thread	D3	D4 min form B/E	D4 min form G/H	L1 max	L2 min	L rif	Torque (Nm) form E	Torque(Nm) form H	Torque (Nm) form G
UNIVERSAL	6	G 1/8	9,8	15	17,2	1	8	7,5	20	20	20
	8	G 1/4	13,2	20	20,7	1,5	12	10,2	45	45	45
	10	G 1/4	13,2	20	20,7	1,5	12	10,2	45	45	45
	12	G 3/8	16,7	23	24,5	2	12	10,4	70	70	70
	14-15-16	G 1/2	21	28	29,6	2,5	14	13,1	85	85	85
	18-20	G 3/4	26,5	33	36,9	2,5	16	13,5	170	170	170
	25	G 1	33,3	41	46,1	2,5	18	14,7	330	330	330
	30-32	G 1 1/4	42	51	54	2,5	20	14,7	430	430	430
	38	G 1 1/2	47,9	56	60,5	2,5	22	14,7	510	510	510

Performances:	**Sealing form E:**	**Sealing forma H:**	**Sealing form G:**
- Pressure capacity	Excellent	Excellent	Excellent
- Sealing characteristics	Excellent	Excellent	Excellent
- Additional sealing required	no	no	no
- Safety factor	4:1	4:1	4:1

*In revision phase

STUD ENDS SAE J514 WITH METRIC THREAD

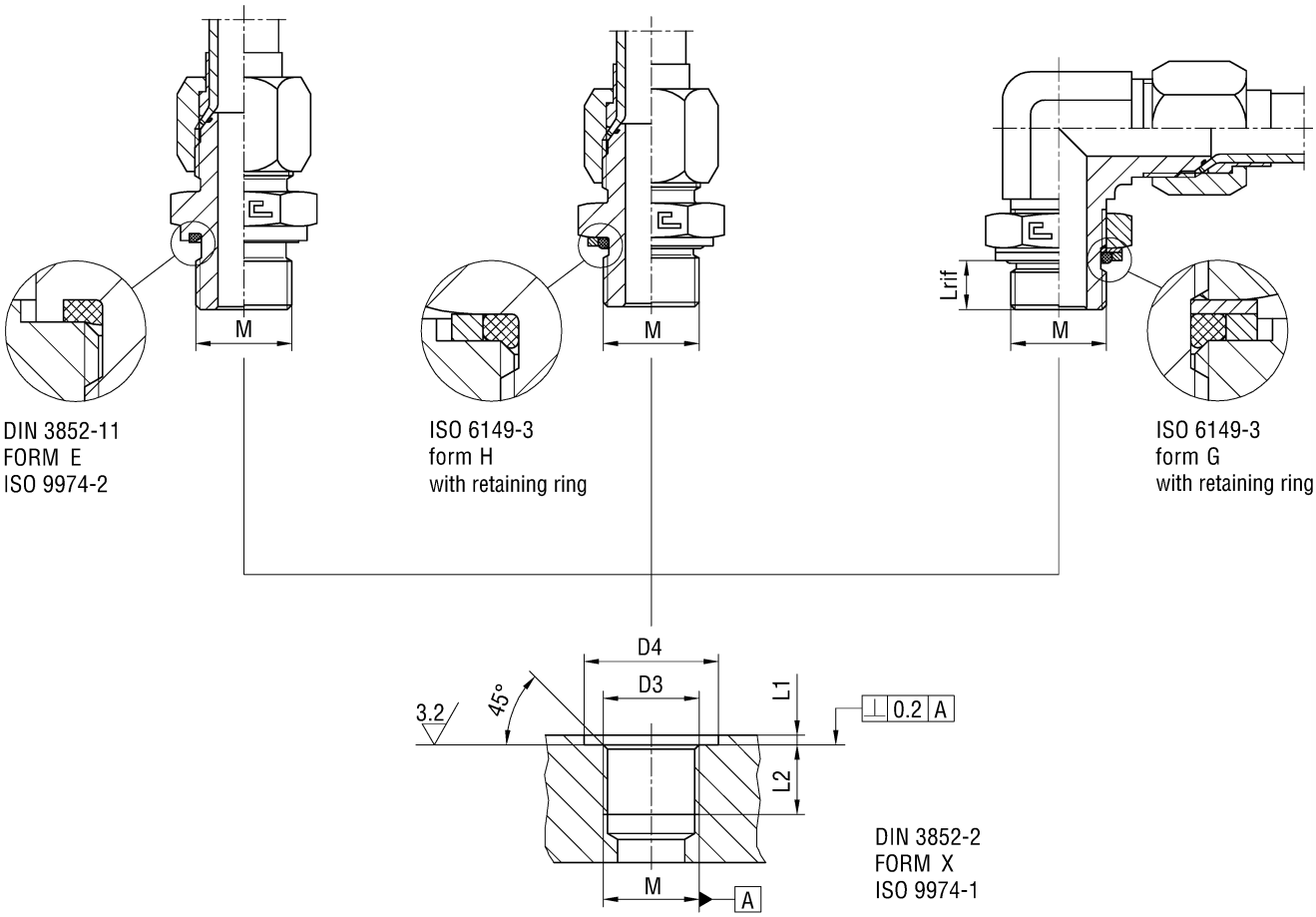

Serie	ØTube	Metric Thread	D3	D4 min form E	D4 min ISO 6149	L1 max	L2 min	L rif	Torque (Nm) form E	Torque (Nm) form H	Torque (Nm) form G
UNIVERSAL	6	M10x1	10	15	16	1	8	7,6	20	20	20
	8	M12x1.5	12	18	19	1,5	12	9,7	30	30	30
	10	M14x1.5	14	20	21	1,5	12	9,7	45	45	45
	12	M16x1.5	16	23	24	1,5	12	10,2	55	55	55
	14-15-16	M18x1.5	18	25	26	2	12	10,9	70	70	70
	14-15-16	M20x1,5	20	27	27	2	14	12	105	105	105
	14-15-16	M22x1.5	22	28	29	2,5	14	12	120	120	120
	18-20	M27x2	27	33	34	2,5	16	13,8	170	170	170
	25	M33x2	33	41	43	2,5	18	13,8	330	330	330
	30-32	M42x2	42	51	52	2,5	22	13,8	430	430	430
	38	M48x2	48	56	57	2,5	22	15,3	510	510	510

Performances:	**Sealing form E:**	**Sealing form H:**	**Sealing form G:**
- Pressure capacity	Excellent	Excellent	Excellent
- Sealing characteristics	Excellent	Excellent	Excellent
- Additional sealing required	no	no	no
- Safety factor	4:1	4:1	4:1

STUD ENDS SAE J514 WITH METRIC THREAD (ISO 6149)

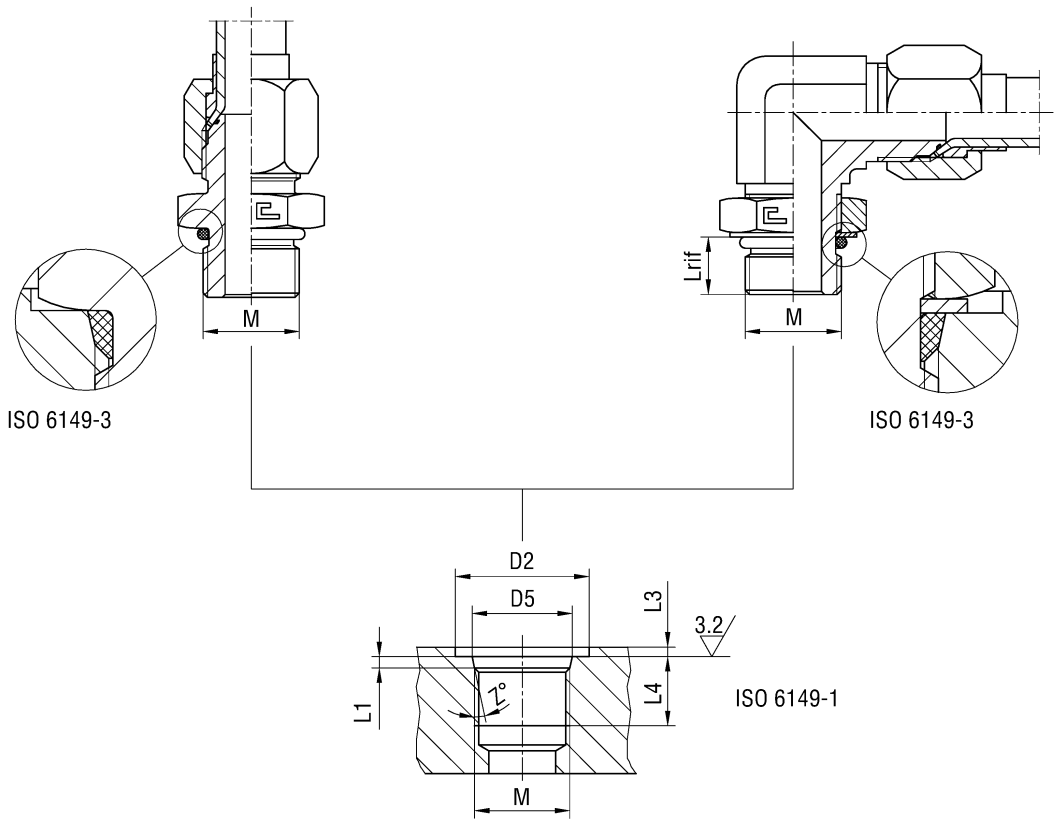

Serie	P max ISO 6149 STRAIGHT	P max ISO 6149 ADJUSTABLE	ØTube	Metric Thread	D2 min	D5	L1	L3 max	L4 min	L rif	Z°	Torque (Nm) ISO 6149 STRAIGHT	Torque (Nm) ISO 6149 ADJUSTABLE
UNIVERSAL	400	315	6	M10x1	16	11,1	1,6	1	10	8,6	12	15	15
	400	315	8	M12x1,5	19	13,8	2,4	1,5	11,5	11,1	15	25	25
	350	315	10	M14x1,5	21	15,8	2,4	1,5	11,5	11,1	15	30	30
	315	250	12	M16x1,5	24	17,8	2,4	1,5	13	11,6	15	35	35
	315	250	14-15-16	M18x1,5	26	19,8	2,4	2	14,5	12,3	15	40	40
	315	250	14-15-16	M20x1,5	27	21,8	2,4	2	14,5	13,4	15	50	50
	315	250	14-15-16	M22x1,5	29	23,8	2,4	2	15,5	13,4	15	55	55
	200	160	18-20	M27x2	34	29,4	3,1	2	19	15,8	15	85	85
	200	160	25	M33x2	43	35,4	3,1	2,5	19	15,8	15	140	140
	200	160	30-32	M42x2	52	44,4	3,1	2,5	19,5	15,8	15	180	180
	200	160	38	M48x2	57	50,4	3,1	2,5	22	17,3	15	230	230

Performances:	**STRAIGHT sealing:**	**ADJUSTABLE sealing:**
- Pressure capacity	Excellent	Excellent
- Sealing characteristics	Excellent	Excellent
- Additional sealing required	no	no
- Safety factor	4:1	4:1

N.B. To obtain the ISO 6149 type of sealing please take out the retaining ring from the standard fitting.

STUD ENDS SAE J514 WITH UNF/UN-2A THREAD

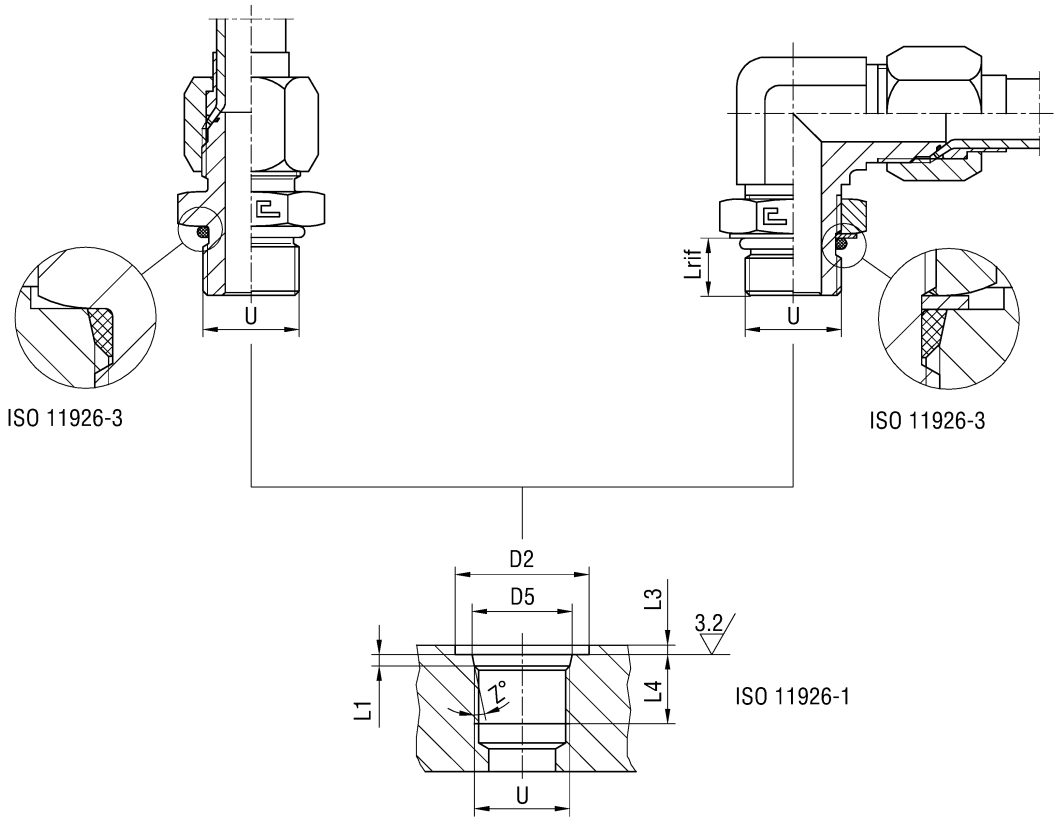

Serie	ØTube	UNF/UN2A Thread	D2 min	D5	L1	L3 max	L4 min	L rif	Z°	Torque (Nm) STRAIGHT	Torque (Nm) ADJUSTABLE
UNIVERSAL	6	7/16-20 UNF-2A	21	12,45	2,4	1,6	11,5	9,9	12	20	20
	8	1/2-20 UNF-2A	23	14,05	2,4	1,6	11,5	9,9	12	25	25
	10	9/16-18 UNF-2A	25	15,7	2,5	1,6	12,7	11,1	12	30	30
	12	3/4-16 UNF-2A	30	20,65	2,5	2,4	14,3	12,5	15	45	45
	14-15-16	7/8-14 UNF-2A	34	24	2,5	2,4	16,7	14,5	15	55	55
	18-20	1 1/16-12 UN-2A	41	29,2	3,3	2,4	19	16,8	15	85	85
	25	1 5/16-12 UN-2A	49	35,55	3,3	3,2	19	16,8	15	130	130
	30-32	1 5/8-12 UN-2A	58	43,55	3,3	3,2	19	16,8	15	170	170
	38	1 7/8-12 UN-2A	65	49,9	3,3	3,2	19	16,8	15	180	180

Performances:	**STRAIGHT sealing:**	**ADJUSTABLE sealing:**
- Pressure capacity	Excellent	Excellent
- Sealing characteristics	Excellent	Excellent
- Additional sealing required	no	no
- Safety factor	4:1	4:1

STUD ENDS SAE J514 WITH BSPT THREAD
STUD ENDS SAE J514 WITH NPTF THREAD

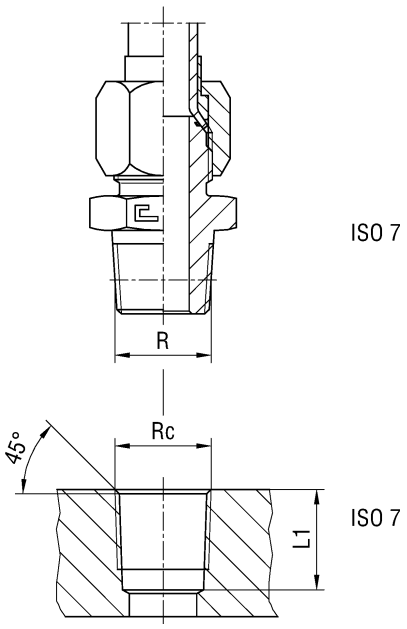

ISO 7

ISO 7

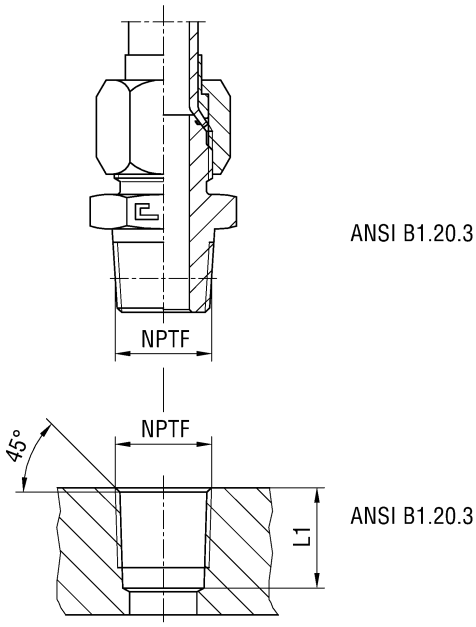

ANSI B1.20.3

ANSI B1.20.3

Serie	ØTube	BSPT Thread	L1
UNIVERSAL	6	R 1/8	7,4
	8	R 1/4	7,4
	10	R 3/8	11
	12	R 1/2	11,4
	14-15-16	R 1/2	15
	18-20	R 3/4	16,3
	25	R 1	19,1
	30-32	R 1 1/4	21,4
	38	R 1 1/2	21,4

Serie	ØTube	NPTF Thread	L1
UNIVERSAL	6	1/8-27 NPTF	11,6
	8	1/8-27 NPTF	11,6
	10	1/4-18 NPTF	16,4
	12	3/8-18 NPTF	17,4
	14-15-16	1/2-14 NPTF	22,6
	18-20	3/4-14 NPTF	23,1
	25	1-11,5 NPTF	27,8
	30-32	1 1/4-11,5 NPTF	28,3
	38	1 1/2-11,5 NPTF	28,3

Performances:	**Taper sealing:**
- Pressure capacity	Low-Medium
- Sealing characteristics	Low-Medium
- Additional sealing required	yes
- Safety factor	2,5:1

Performances:	**Taper sealing:**
- Pressure capacity	Low-Medium
- Sealing characteristics	Low-Medium
- Additional sealing required	yes
- Safety factor	2,5:1

BSI 5200

THE NEW CAST 60° FITTINGS
AN EASY ASSEMBLY
A KNOWN PRODUCT, SAFE AND RELIABLE

AVAILABLE IN CARBON AND STAINLESS STEEL

THEORY OF OPERATION

The CAST S.p.A. fitting according to the norms BSI 5200, is a mechanical fitting adapter traditionally used for high pressure oleo-dynamic systems.
The sealing is made by the contact between two metal surfaces, with no deformation of the single components, plus an elastomeric sealing placed into a groove on the 60° cone.
The elastomeric seal is according to a CAST S.p.A. project.
The coupling between the body of the fitting and the adapter is guaranteed by the swivel tightening nut. This allow to realize a fast assembling-disassembling tube making the easiest realization of complex oleo-dynamic systems.

COUPLING SYSTEM BSI 5200

Reference prescription:

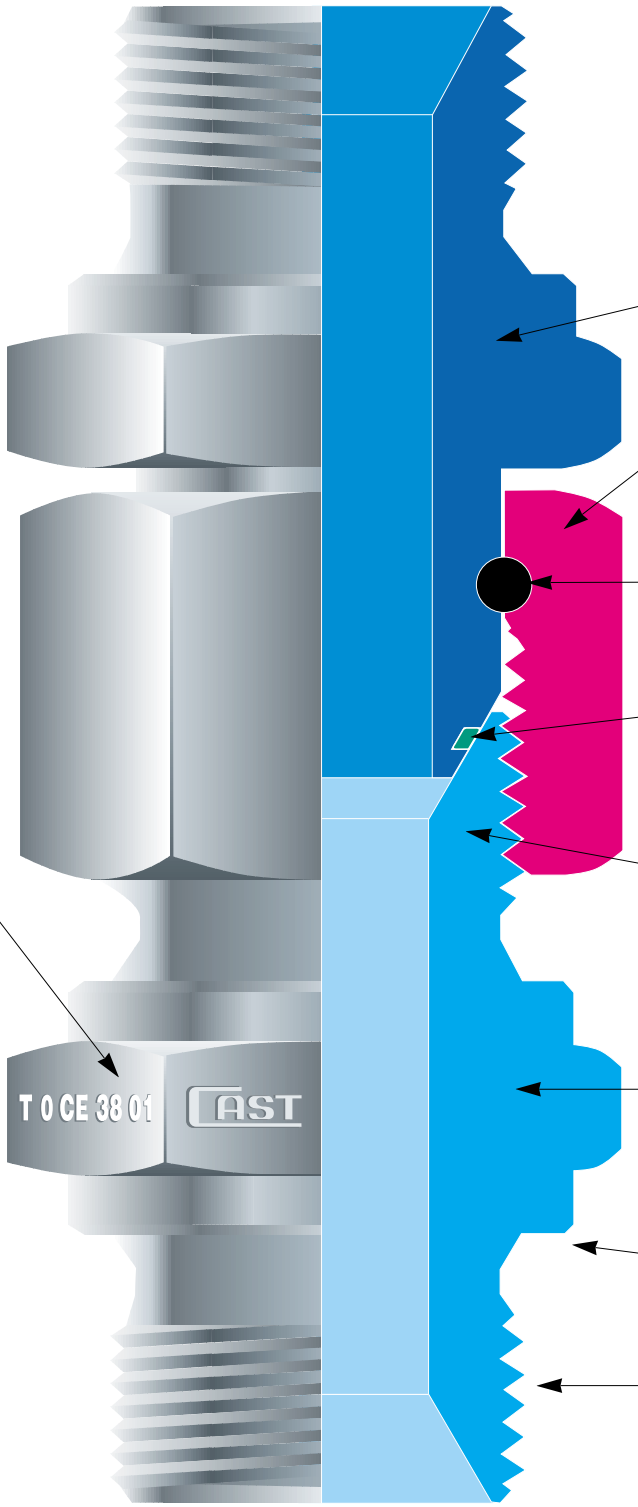

Swivel body

Swivel nut

Wire

O-Ring CAST

Shape of housing BSI 5200

Fitting body

Bonded seal housing DIN 3852-1A/2A

Threaded end BSI 5200

Traceability decoding

CAST = Manufacturer

- T = Production plant
- 0 = Year manufactured
- CE = Made in EEC
- 38 = Type of steel used
- 01 = Heat number of the steel used

TECHNICAL CHARACTERISTICS

The CAST S.p.A. 60° adapter fitting grants a perfect sealing of the system independently from the fluid utilized , as long as corrosive fluids are not used and all the specific prescription for this type of fitting are complied with.

These fittings are manufactured in a single series defined “UNIVERSAL” since are designed as union between different international fitting norms as DIN 2353 and SAE J514.

Vibrations, in the norm, do not alter the functionality of this type of fitting, also at the top level of the quoted values , and therefore keeps the best characteristics of absolute guarantee, safety and reliability. For these specific reasons this fitting may be used in hard working conditions.

Under the mechanical strength given by the tightening of the nut on the fitting body, the 60° conical male part couples with the 60° conical female part of the fitting body giving birth to a metal to metal seal supported by the elastomeric seal as well.

Before assembly

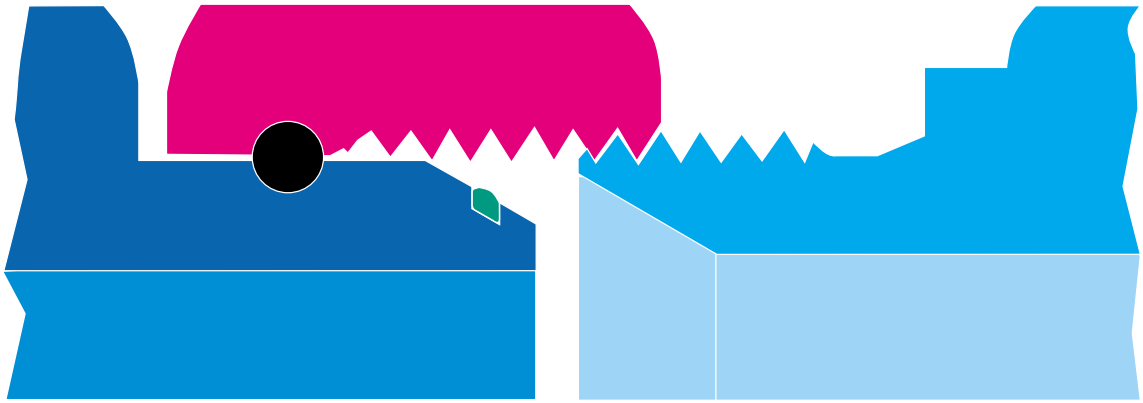

After assembly

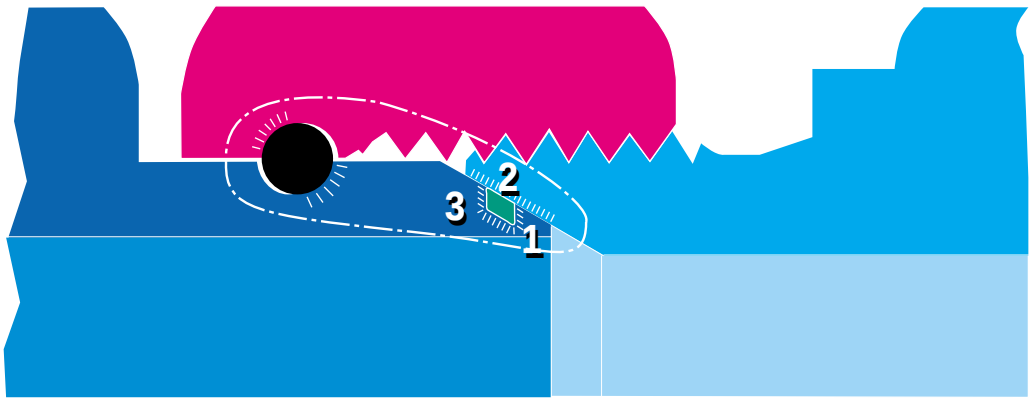

Field of force after assembly
—·—·—·—·—·—

Pressure surfaces after assembly
IIIIIIIIIIIIIIIIIIIIIIIIIIII

Sealing points
1 - 2 - 3

DETAIL 60° CONE SEALING POINTS

Thread: G 3/4
Assembly: as per tightening torque indicated on this catalogue (260Nm)
Magnifying: Microscope x5
Detail scale: 0,5

SEALING POINT 1 – 60° CONE

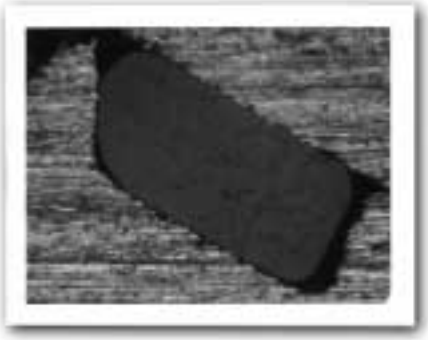

SEALING POINT 2 – O-RING

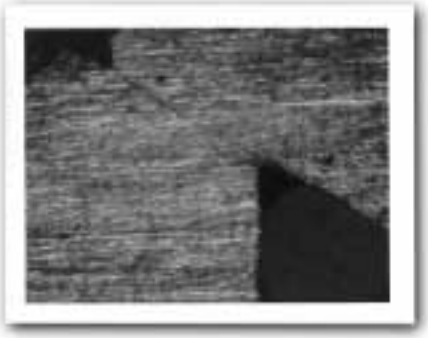

SEALING POINT 3 – 60° CONE

TECHNICAL INNOVATION

Since many years the market has been asking, with increasing strength, for oleo-dynamic components that would join in a single piece the characteristics of safety of blocking, functionality of the assembly and perfect sealing. These elements are now a must for the safety of the environment (Law 626/94) as well as the responsibility of the products (D.P.R. 224 - CEE 85/374), so this has pushed us into the field of research and led us into the realization of this new 37° fitting that solves once and for all the above mentioned problems.ci hanno portato alla realizzazione del nuovo adattatore a 60°, che risolve alla fonte i problemi sopra indicati.

PRODUCT CONCEPT

• The idea has been to use the standard structure of the SAE J514 fitting and to place an additional sealing in the 37° cone (O-ring) so to obtain a safer product.

• The new 37° fitting with elastomeric seal solve the problem of small leakages, typical of a metal to metal sealing system on high pressure fittings.

• However the introduction of the new sealing point has not altered the sealing requirements both, with or without the O-ring, nor limited the performances.

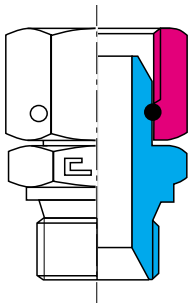

Standard 60° adapter
without elastomeric seal
Available on scheduled orders only.

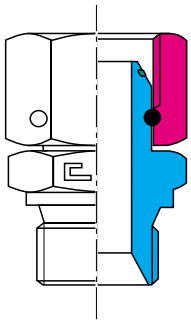

Product ready on stock.
New 60° adapter with elastomeric seal
designed by Cast.

SEALING

The new adapter solve the total sealing problem in the following way:

• On the outside diameter of the 60° cone has been realized a grove as insert place for an O-ring. This elastomeric seal guarantees a perfect sealing at all times.

• The realization of the groove has allowed us to improve the sealing characteristics of the adapter also on the metal to metal sealing, dividing in two different sealing points the metal surface.

• Strenuous tests carried out in our technical laboratory in Volpiano have made clear, beyond any doubt the reliability of the sealing with or without the O-ring itself.

• Because of that we can affirm that this new type of fitting, used with the additional elastomeric seal will grant a sealing system as dry as the dust.

• If, by any chance, due to high temperatures or particularly hazardous fluids, the O-ring may not be employed, the fitting guarantee as well the perfect sealing with the metal to metal seal.

GENERAL INSTRUCTIONS

• Before start any operation on the adapters please check that all the tools to be used in the process are conforming to the standards. Check the tools every 30-50 assembly and substitute any non conform.

• Before fastening the components to the machine on-board system, check alignment between the tube and the fitting. Fittings must not be used to correct any misalignment or to support tubes. Long tubes or those liable to high stress must be clamped to avoid excessive vibrations. Misalignment may impair system functioning.

• Correct lubrication of the components to be tightened is indispensable for correct functioning of the system: mineral oil, or torque-tension for carbon steel fittings, nickel-based anti-seizing compound for stainless steel fittings.

• All the fittings and the valves contained in this catalogue may be used only for oleo-dynamic systems only.

• Is not allowed the mixing of different materials.

• The indicated pressures are intended for steel tubes only.

UTILIZATION STANDARDS

CARBON STEEL FITTINGS

• High quality tubes must be employed to assure correct use and related technical performances of carbon steel fittings. Use of tubes without the aforementioned characteristics may seriously impair the efficiency of the adapter. We recommend to use the following tubes only: seamless cold drawn steel tubes as per ST 37.4 complying g with DIN 1630. The maximum allowed hardness on the outside diameter of the tube is 75 HRB.

STAINLESS STEEL FITTINGS

• High quality tubes must be employed to assure correct use and related technical performances of stainless steel fittings. Use of tubes without the aforementioned characteristics may seriously impair the efficiency of the fitting. We recommend to use the following tubes only: cold drawn seamless stainless steel tubes with no welding as per 1.4571 DIN 17458 or ASTM A 269. The maximum allowed hardness on the outside diameter of the tube is 85 HRB.

QUALITY ASSURANCE ACCORDING TO UNI EN ISO 9001

The Quality Assurance System complies with UNI EN ISO 9001, certificate (N°90/94) issued by the RINA certification authority recognized by IQNET at European level.
At the customer's request, our Quality Service will issue certificates of origin for the materials used to manufacture the products delivered.
Our Quality Experts are always ready to provide customers with advice, to guide them around our facilities as to provide documentation of the traceability system applied.

COMPONENT TESTING

In addition to the normal dimensional checks carried out during machining, percentage inspections of the finished product, practical tightness and fatigue tests, coupling tests between the various parts are also carried out on CAST fittings. At the customer's request, our Product Test and Inspection Service issues the certificate of the tests carried out: dimensional and geometrical tests, checking of static seal at low and high pressure, dynamic seal at high pressure (maximum operating pressure + 33% as per ISO 8434-5).
If required by the customer, tests can be carried out by various Third Party Authorities including: RINA – DVGW - Lloyd's Register of Shipping - Det Norske Veritas - Germanischer Lloyd - American Bureau of Shipping (to be specified on the order).

SAFETY FACTORS

• The new 60° adapter solves all the problems of safety since has been carefully designed for that purpose.

• The use of high quality steel tubes in the right wall thickness, make this specific type of fitting particularly safe.

• CAST S.p.A. production is made in compliance with the highest safety standard and for that reason we choose the solution of the swivel nut adapter instead of the crimped fittings.

• CAST S.p.A. production is made in compliance with the reference norm.

• Nominal working pressures indicated in this catalogue are intended as maximums (including pressure peaks). To use this fitting on higher stresses test must be carried out in accordance with the manufacturer.

• The safety factor 4:1 is intended as static test with the temperatures within the given range and complying with all the given references. Same safety factor 4:1 for parallel stud ends with elastomeric seal. For studs with taper or parallel ends with metal to metal seal the safety factor lowers to 2,5:1.

• Is understood that the product is guaranteed only if the full connection is made entirely with CAST S.p.A. products and components.

Destructive testing with 22x2 carbon steel tube
The tube burst at 800 bar without any leaks or sweating from the sealing points.

TIGHTENING TORQUES FOR SWIVEL NUT FITTINGS

BSI 5200 cone for carbon and stainless steel

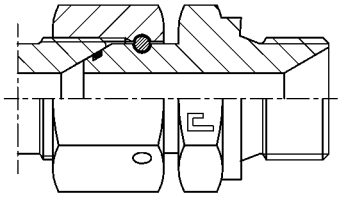

Serie	BSPP Thread	Torque (Nm)	Metric Thread	Torque (Nm)
UNIVERSAL	G 1/8	25	M12x1,5	35
	G 1/4	65	M14x1,5	45
	G 3/8	85	M16x1,5	55
	G 1/2	150	M18x1,5	70
	G 5/8	200	M20x1,5	80
	G 3/4	260	M22x1,5	100
	G 1	320	M26x1,5	170
	G 1 1/4	500	M30x1,5	250
	G 1 1/2	600		
	G 2	700		

Notes:

All the values reported in the above tightening tables and mere indication, and come from a series of practical tests carried out in the technical laboratory of Volpiano (TO). These may vary according to the materials and of the tolerances of the employed components.

All the values express in Newton Meters (Nm) for the tightening torques on the 60° cone, represent the torquing moment necessary to have the correct tightness.

STUD ENDS BSI 5200 WITH BSPP THREAD

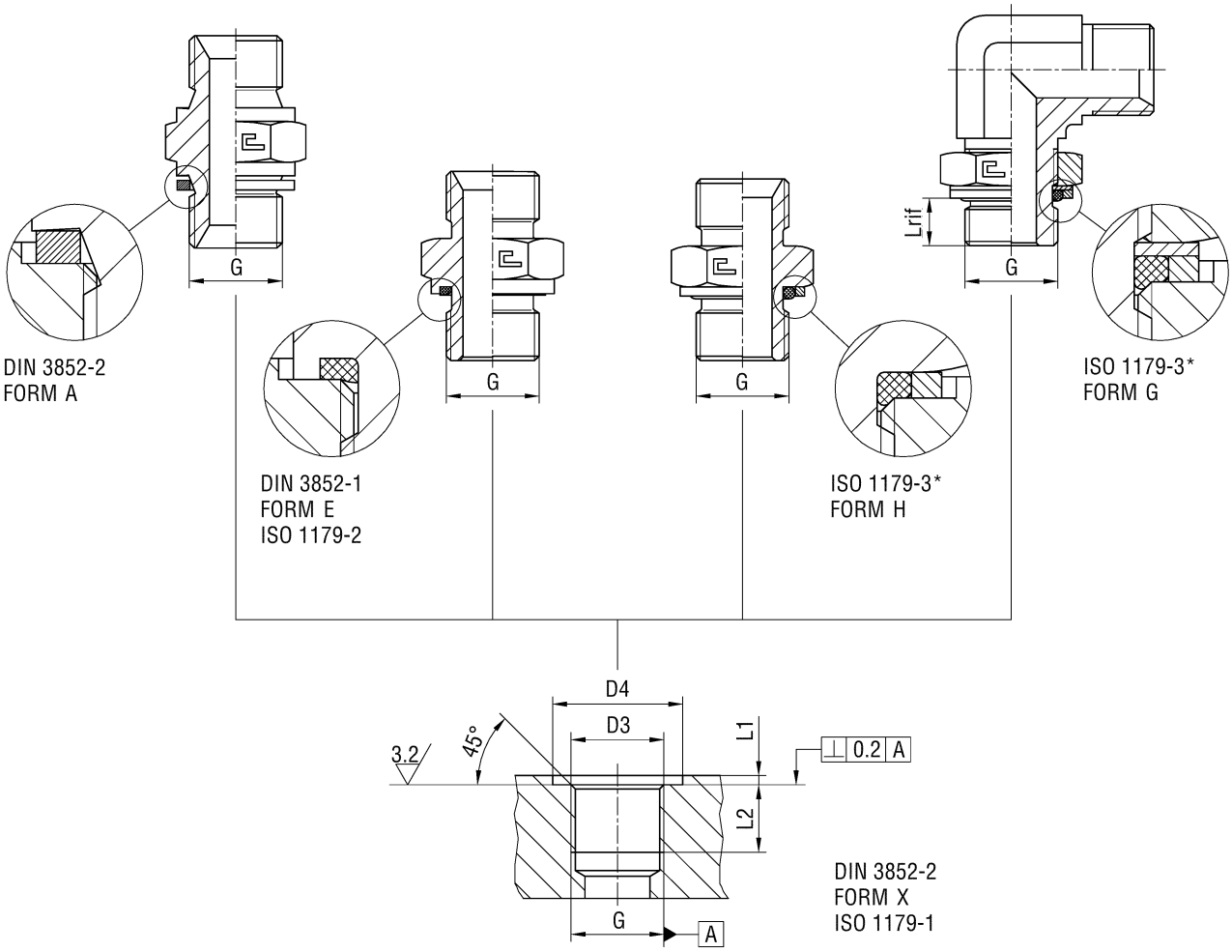

Serie	BSPP Thread	D3	D4 min form A/E	D4 min form G/H	L1 max	L2 min	L rif	Torque (Nm) form A	Torque (Nm) form E	Torque (Nm) form H	Torque (Nm) form G
UNIVERSALE	G 1/8	9,8	15	17,2	1	8	7,5	20	20	20	20
	G 1/4	13,2	20	20,7	1,5	12	10,2	35	45	45	45
	G 3/8	16,7	23	24,5	2	12	10,4	70	70	70	70
	G 1/2	21	28	29,6	2,5	14	13,1	85	85	85	85
	G 5/8	23	31	-	2,5	16	-	105	-	-	-
	G 3/4	26,5	33	36,9	2,5	16	13,5	120	170	170	170
	G 1	33,3	41	46,1	2,5	18	14,7	180	330	330	330
	G 1 1/4	42	51	54	2,5	20	14,7	260	430	430	430
	G 1 1/2	47,9	56	60,5	2,5	22	14,7	290	510	510	510
	G 2	59,7	69	71	3	26	14,7	380	640	640	640

Performances:	**Sealing form A:**	**Sealing form E:**	**Sealing form H:**	**Sealing form G:**
- Pressure capacity	Good	Excellent	Excellent	Excellent
- Sealing characteristics	Good	Excellent	Excellent	Excellent
- Additional sealing required	no	no	no	no
- Safety factor	2,5:1	4:1	4:1	4:1

*In revision phase

STUD ENDS BSI 5200 WITH METRIC THREAD

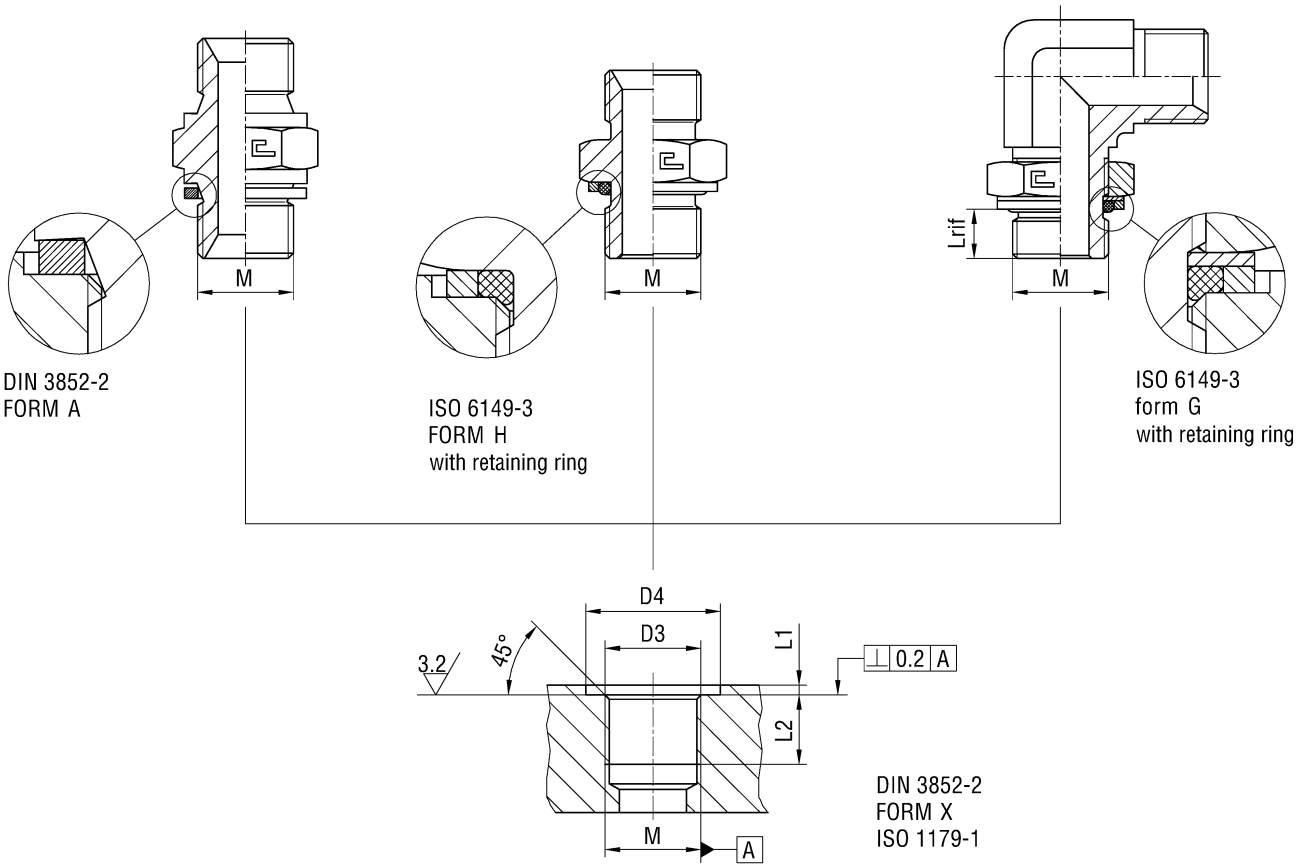

Serie	Metric Thread	D3	D4 min	L1 max	L2 min	L rif	Torque (Nm) forma A	Torque (Nm) forma H	Torque (Nm) forma G
UNIVERSALE	M10x1	10	15	1	8	7,6	20	20	20
	M12x1,5	12	18	1,5	12	9,7	30	30	30
	M14x1,5	14	20	1,5	12	9,7	45	45	45
	M16x1,5	16	23	1,5	12	10,2	60	55	55
	M18x1,5	18	25	2	12	10,9	80	80	80
	M20x1,5	20	27	2	14	-	105	-	-
	M22x1.5	22	28	2,5	14	12	130	120	120
	M26x1,5	26	33	2,5	16	-	160	-	-
	M27x2	27	33	2,5	16	13,8	-	170	170
	M30x1,5	30	37	2,5	12	-	190	-	-
	M33x2	33	41	2,5	18	13,8	-	330	330
	M38x1,5	38	45	2,5	14	-	230	-	-
	M45x1,5	45	53	2,5	14	-	280	-	-

Performances:	**Sealing form A:**	**Sealing form H:**	**Sealing form G:**
- Pressure capacity	Good	Excellent	Excellent
- Sealing characteristics	Good	Excellent	Excellent
- Additional sealing required	no	no	no
- Safety factor	2,5:1	4:1	4:1

STUD ENDS BSI 5200 WITH METRIC THREAD (ISO 6149)

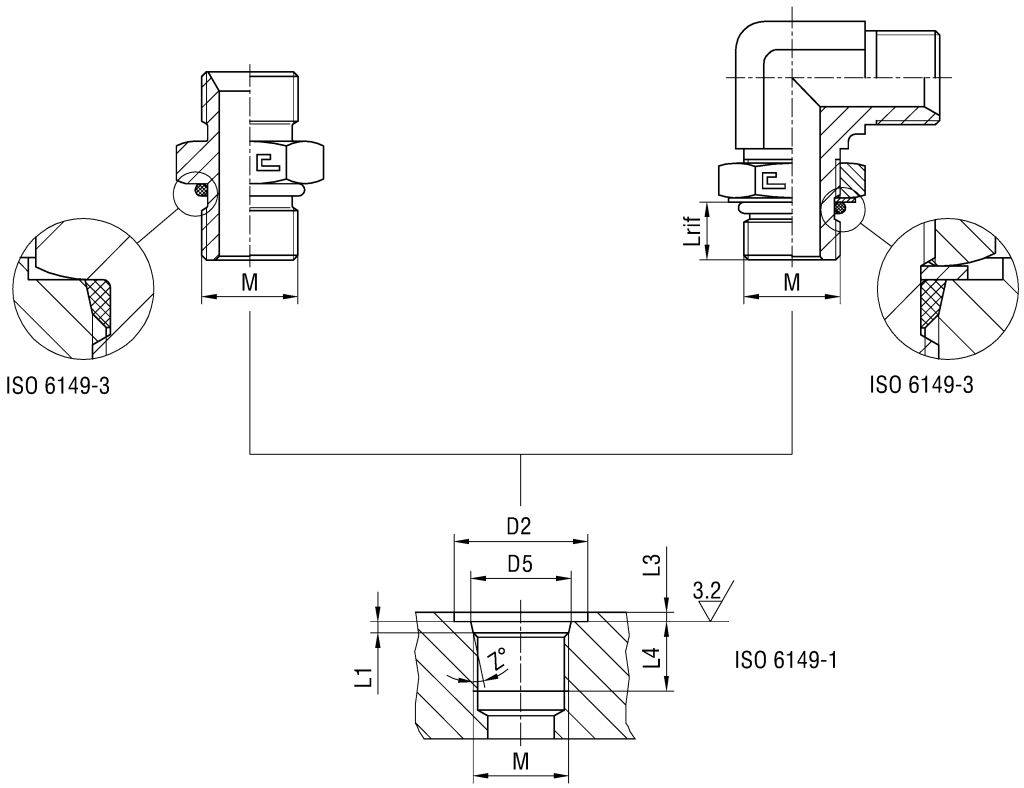

Serie	P max ISO 6149 STRAIGHT	P max ISO 6149 ADJUSTABLE	Metric Thread	D2 min	D5	L1	L3 max	L4 min	L rif	Z°	Torque (Nm) ISO 6149 STRAIGHT	Torque (Nm) ISO 6149 ADJUSTABLE
UNIVERSAL	400	315	M10x1	16	11,1	1,6	1	10	8,6	12	15	15
	400	315	M12x1,5	19	13,8	2,4	1,5	11,5	11,1	15	25	25
	400	315	M14x1,5	21	15,8	2,4	1,5	11,5	11,1	15	30	30
	315	250	M16x1,5	24	17,8	2,4	1,5	13	11,6	15	35	35
	315	250	M18x1,5	26	19,8	2,4	2	14,5	12,3	15	40	40
	315	250	M22x1,5	29	23,8	2,4	2	15,5	13,4	15	55	55
	200	160	M27x2	34	29,4	3,1	2	19	15,8	15	85	85
	200	160	M33x2	43	35,4	3,1	2,5	19	15,8	15	140	140

Performances:	**STRAIGHT sealing:**	**ADJUSTABLE sealing:**
- Pressure capacity	Excellent	Excellent
- Sealing characteristics	Excellent	Excellent
- Additional sealing required	no	no
- Safety factor	4:1	4:1

N.B. To obtain the ISO 6149 type of sealing please take out the retaining ring from the standard fitting.

246. STUD ENDS BSI 5200 WITH BSPT THREAD

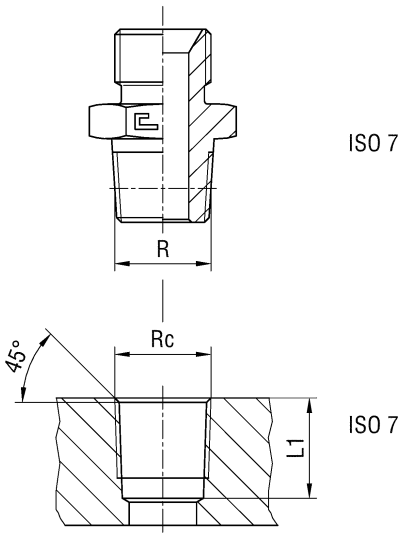

Serie	BSPT Thread	L1
UNIVERSAL	R 1/8	7,4
	R 1/4	11
	R 3/8	11,4
	R 1/2	15
	R 3/4	16,3
	R 1	19,1
	R 1 1/4	21,4
	R 1 1/2	21,4
	R 2	25,7

Performances:	**Taper sealing:**
- Pressure capacity	Low-Medium
- Sealing characteristics	Low-Medium
- Additional sealing required	yes
- Safety factor	2,5:1

STUD ENDS BSI 5200 WITH NPTF THREAD

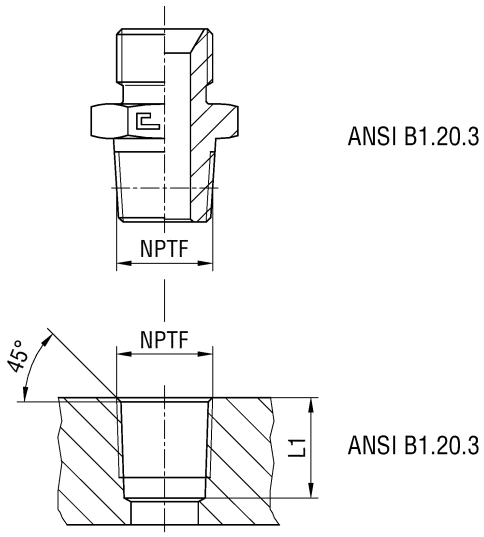

Serie	NPTF Thread	L1
UNIVERSAL	1/8-27 NPTF	11,6
	1/4-18 NPTF	16,4
	3/8-18 NPTF	17,4
	1/2-14 NPTF	22,6
	3/4-14 NPTF	23,1
	1-11,5 NPTF	27,8
	1 1/4-11,5 NPTF	28,3
	1 1/2-11,5 NPTF	28,3
	2-11,5 NPTF	29

Performances:	**Taper sealing:**
- Pressure capacity	Low-Medium
- Sealing characteristics	Low-Medium
- Additional sealing required	yes
- Safety factor	2,5:1

VALVES

MINIMUM PRESSURE DROPS
A KNOWN PRODUCT, SAFE AND RELIABLE

AVAILABLE IN CARBON AND STAINLESS STEEL

CAST NON-RETURN VALVE

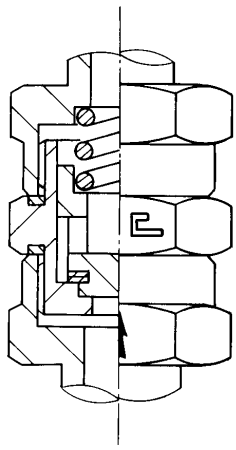

THEORY OF OPERATION

CAST S.p.A. non-return valve is employed in all those circuits where the fluid must flow in one way only, avoiding the flow in the opposite direction.

TO OBTAIN PERFECT SEALING

1. 1. Make sure that all tubes are perfectly clean and that there are no impurities in the system where the fluid will flow.
2. Remove protective caps only when ready to assemble, making sure that in the assembly phase no impurities enter the system.

TECHNICAL CHARACTERISTICS

1. CAST S.p.A. non-return valve assures a perfect tightness of the circuit, provided that the indicated nominal working pressures are kept as recalled in this catalogue.
2. The particular profile of its inner elements assures the correct flow with a minimum pressure drop.
3. The valve is a compact, particularly sturdy element; the seal is obtained by a plain seat metal to metal plug with an elastomeric seal gasket assuring tightness at low working pressures.
4. A basic body allows to interchange different types of non return valves applying from time to time the different engaged stud ends as chosen by the customer allowing an easy logistic of the stock.
5. The valve may be used for convoying mineral oils, fuels, compressed air or gases. Please specify when ordering if the non-return valve needs specific type of gaskets.
6. The nominal working temperature is between –20° and +120° Celsius degrees for carbon steel, and between –60° and +200° Celsius degrees for stainless steel. The limit may change according to the type of gasket used.

TECHNICAL DATAS

Maximum advised flow speed is 5 mt/sec.
The standard opening pressure is 1bar, on request, to be specified when ordering, we can supply non-return valves with opening pressure up to 3bars with a 0,5bar step.

COMPONENT TESTING

All CAST S.p.A. non-return valves are checked for leakages at low pressure and at the opening value; high pressure tests are carried out at the maximum nominal working pressures plus 33%.

SAFETY FACTORS

Safety factor is 2.5:1 at static load with temperature within range.

FINISH TREATMENT

All valves are treated with a chemical polishing with steel spheres which eliminate all oxides and burrs due to the machining phase, without altering or damaging the product.
On all valves are placed stickers reporting opening pressure and flow direction.

CAST NEEDLE VALVE

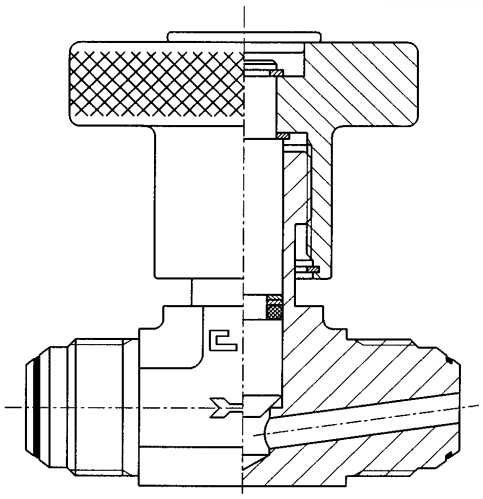

THEORY OF OPERATION

CAST S.p.A. needle valve is employed in all those circuits where there is the need to reduce or stop the fluid flow according to the immediate needs.

TO OBTAIN PERFECT SEALING

1. Make sure that all tubes are perfectly clean and that there are no impurities in the system where the fluid will flow.
2. Remove protective caps only when ready to assemble, making sure that in the assembly phase no impurities enter the system.
3. Assemble the system blocking the valve body.
4. The closure or opening of the “” must always be performed by hand and never using any type of tools.

TECHNICAL CHARACTERISTICS

The innovative CAST S.p.A. needle valve has being engineered to obtain the full interchangeability of the components and to the maximum operative functionality always complying to the safety parameters.
The final result was to:
1. Sealing point obtained on the front face of the piston with no torquing moments during closing or openings.
2. Metal to metal seal with temperated piston rectificated and self aligned on the sealing part of the body.
3. The particular closing section of the piston obtained with no torquing moments in respect of the sealing portion of the body avoid the wearing out of the sealing elements making this valve safe and long lasting.
4. The nominal working temperature is between –20° and +120° Celsius degrees for carbon steel, and between –60° and +200° Celsius degrees for stainless steel. The limit may change according to the type of gasket used.

TECHNICAL DATAS

Tube diameter		Flow section	
metric	Inches	Ø	mm²
6	1/4	2,8	6,15
8	5/16	4	12,56
10	3/8	4	12,56
12	1/2	7	38,46

COMPONENT TESTING

Valves are checked for leakages at low pressure and at high pressure (nominal working pressures plus 33%).

SAFETY FACTORS

Safety factor is 2.5:1 at static load with temperature within range.

FINISH TREATMENT

All valves are treated with a chemical polishing with steel spheres which eliminate all oxides and burrs due to the machining phase, without altering or damaging the product.
All valves are plugged to avoid internal damages.

ASSEMBLY INSTRUCTIONS ACCORDING TO DIN 3859-2 FOR B3 - B4

1. Before pre-assembly, make sure that all the tools to be used are in perfect working order. Replace any inefficient tools.
2. The segment of tube to be pre-assembled must have a straight section at least twice the length of the nut (length H). Roundness must comply with DIN 2391.
3. Cut the tube square by using an appropriate hack-saw (do not use roller type tube cutters). Check that the cut is properly made at 90°. Remove any internal and external burrs.
4. Oil the 24° cone, the thread of the body, the cutting ring and the nut with suitable products. = ⟶
5. Fit the nut and the cutting ring on the tube as shown. The larger diameter of the cutting ring must face the nut.
6. Insert the tube on the 24° cone until it comes into contact with the stop. Tighten the nut by hand until the cutting ring rests firmly on the nut. Then tighten the nut with a wrench until the cutting edge of the ring is in contact with the tube and prevents rotation of this.
7. Holding the tube against its stop and making it sure it does not rotate, tighten the nut by 3/4 of a turn. This way, the cutting edge of the nut cuts into the outer part of the tube for the necessary depth and raises an edge in front of its cutting edge while the second cutting edge clinches the tube at the same time.
8. Loosen the nut and check that there is a clearly raised edge all round the tube. The edge must cover 80% of the front of the cutting ring. This check is peremptory for the safety of all concerned!!! If the raised edge is not satisfactory, pre-assembly must be repeated.
9. If pre-assembly has been carried out correctly, fit the tube on the machine, close with a wrench until a certain resistance is encountered and then tighten for a further 1/4 turn with wrench to wrench contrast.
10. All the pre-assembly of stainless steel fittings must be performed with pre-assembly tool (blocks or machines).

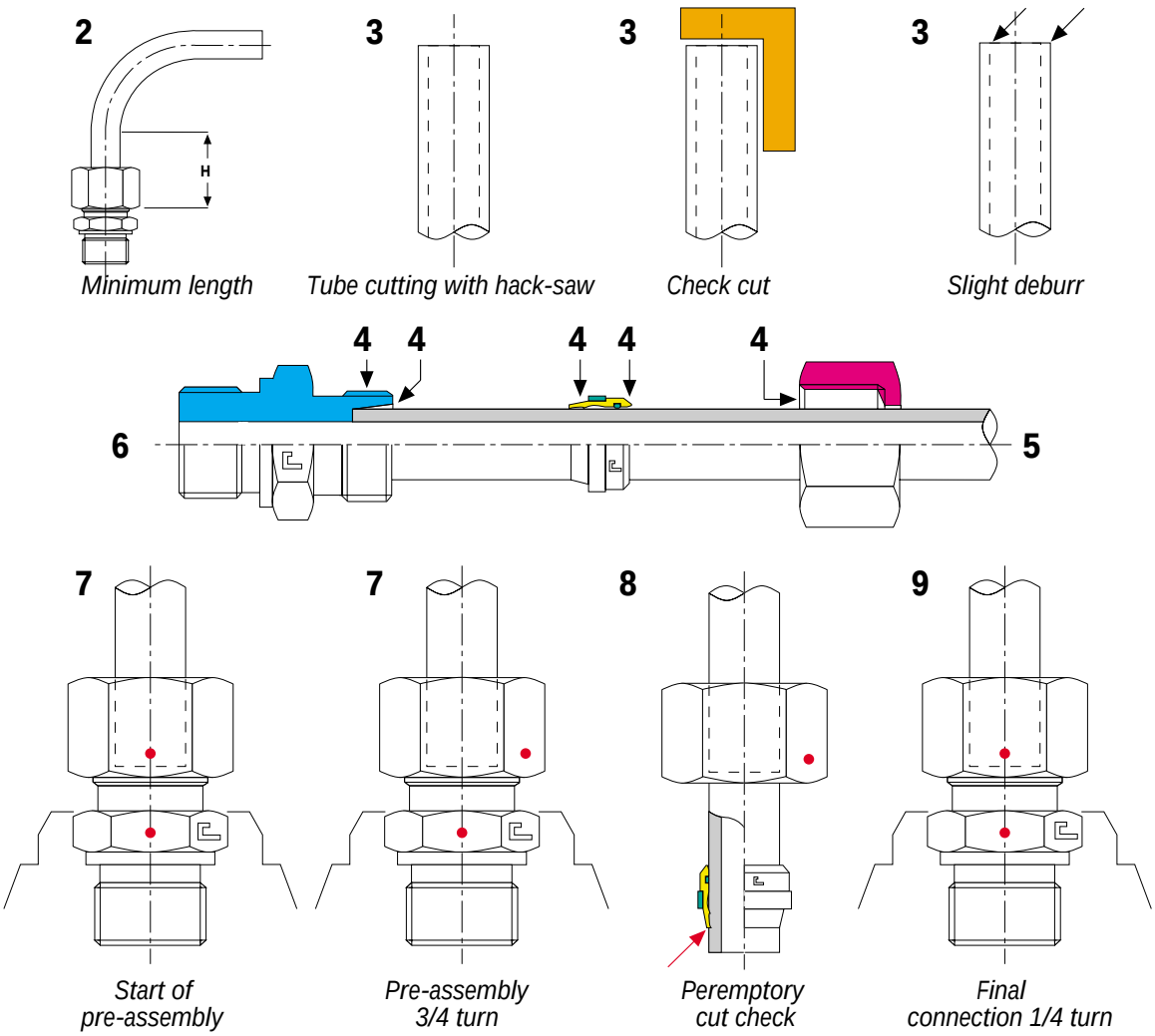

The assembly of B3 and B4 rings must be done with the same procedures and toos.
The two rings are completely interchangeable with Italian and foreign products under the same norm.
Assembly of the system may be repeated without damage to the parts involved.

OPERATING PRESSURES - TORQUE DIAGRAM - TWISTING FACTOR

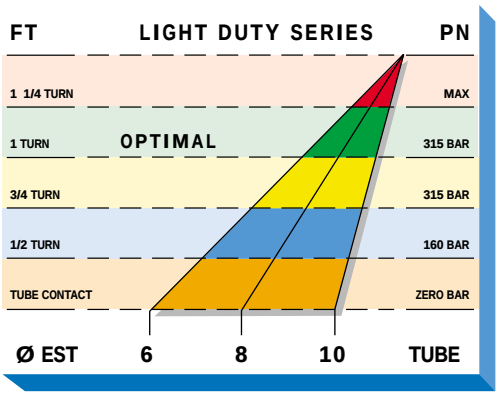

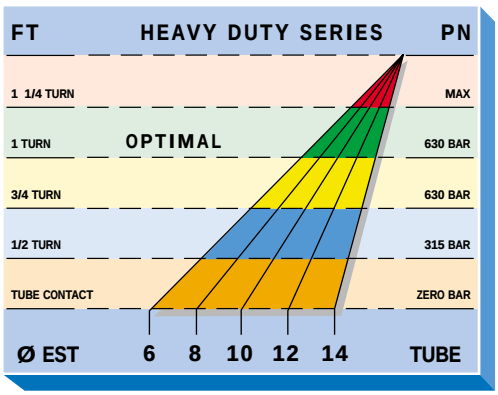

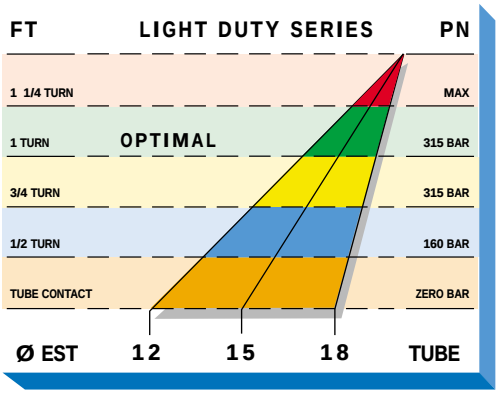

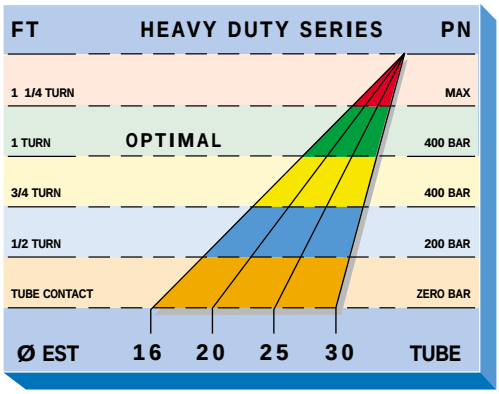

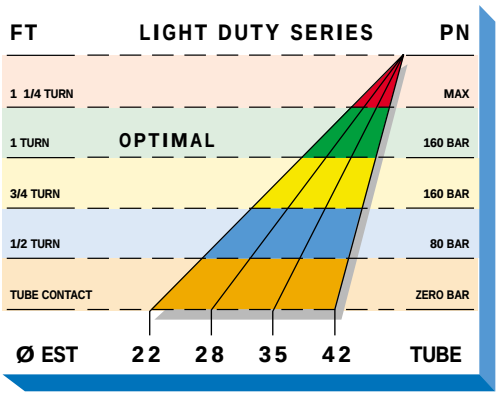

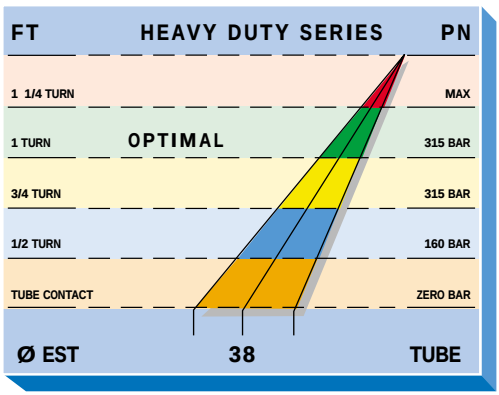

1) Assembly on the fitting according to DIN 3859 P.II P.3.4 1 1/2 turn from blocking by hand.
2) Assembly on the hardened block according to DIN 3859 P.II P.4.5 1 1/4 turn from blocking by hand.
3) CAST assembly instructions respect in full the above norm as 1/2 turn is used for the clearances recuperation and from 3/4 to 1 turn for the tightening of the tube.

- Area not to be used.
- Final tightening area.
- Pre-assembly area.
- Tightening start area.
- Clearances recuperation area.

ASSEMBLY INSTRUCTIONS ACCORDING TO SAE J514

1. Before to start to flare the tube at 37° check for the correct parameters of all the tools to be used and substitute those not complying to the requirements.

2. Cut the tube at a 90° angle using the appropriate tool (do not use roll tube cutters). Check for the correct cut of the tube and deburr internally and externally.

3. Check for any damage that could impair the usefulness of the fitting, on the internal part of the tube. Never use a non complying tube.

4. Clean properly with appropriate products the part of the tube to be flared.

5. Assemble the nut and sleeve on the tube taking care that the open part of the nut is directed the same way where the tube shall be flared so as must be the head of the sleeve, see below.

6. To obtain the wanted length of the tube please add the "B" quote on the technical information datas for tube flaring. This length will be completely absorbed in the assembly phase by the overbearing of flared tube on the body of the fitting.

7. Flare the tube using the appropriate flaring machine, and carefully respecting all the indications in the below table. The drawings indicate the quotes that must be considered.

8. Check that the flaring of the tube has been made correctly and that no structural damages that could impair the correct working of the tube are present.

9. Clean nut, sleeve, fitting and tube and lubricate with suggested products.

10. Couple the flared tube on the fitting cone, and tighten by hand the nut on the body of the fitting to check the correct alignment of the parts involved, then using a wrench tighten until reaching the metal to metal contact of the conical parts.

11. Repeated assembly and disassembly will not alter the functionality of the products.

12. Please refer to the table on page 49 for the correct tightening torques to be applied.

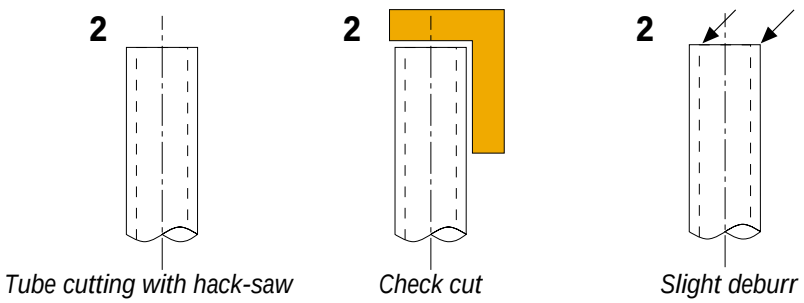

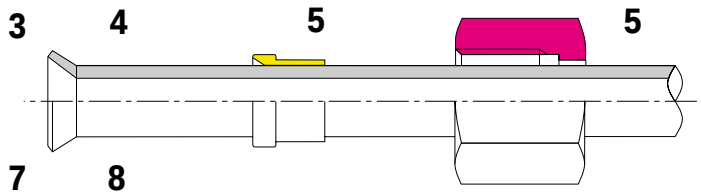

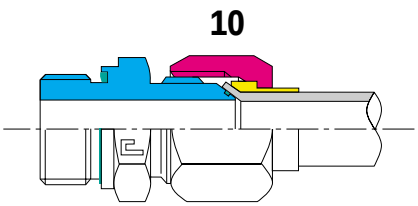

TECHNICAL DATAS FOR THE FLARING OF THE 37° TUBE

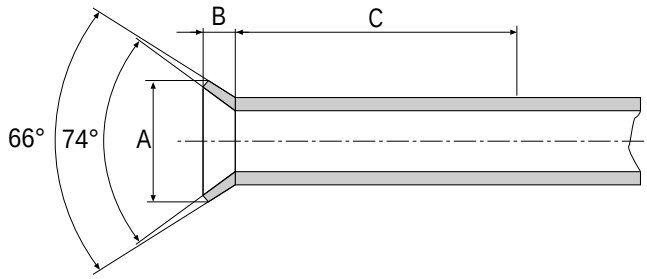

ØMetric Tube	ØInch Tube	Flaring Ø		B	Blocking C
		A min	A max		
6x1	1/4x0,89	8,6	9,1	2,5	32
6x1,5	1/4x1,65	8,9	9,1	2,7	
8x1	5/16x0,89	10,2	10,9	2,3	35
8x1,5	5/16x1,65	10,2	10,9	2,5	
10x1	3/8x0,89	11,7	12,4	2	40
10x1,5	3/8x1,65	11,7	12,4	2,2	
12x1	1/2x0,89	16	16,8	3,7	45
12x1,5	1/2x1,65	16	16,8	3,9	
12x2	1/2x2,1	16	16,8	4,1	
14x1,5	-	19,3	20,1	4,8	45
14x2	-	19,3	20,1	5,1	
15x1,5	-	19,3	20,1	4,1	45
15x2	-	19,3	20,1	4,3	
16x1,5	5/8x1,65	19,3	20,1	3,4	45
16x2	5/8x2,1	19,3	20,1	3,6	
16x2,5	5/8x2,41	19,3	20,1	3,8	
18x2	-	23,4	24,1	5,1	50
18x2,5	-	23,4	24,1	5,3	
20x2	3/4x2,1	23,4	24,1	3,6	50
20x2,5	3/4x2,41	23,4	24,1	3,8	
20x3	3/4x3,05	23,4	24,1	4,1	
25x2	1x2,1	29,7	30,5	4,6	60
25x3	1x3,05	29,7	30,5	5,1	
30x2	-	37,6	38,4	6,7	60
30x3	-	37,6	38,4	7,2	
32x2	1 1/4x2,1	37,6	38,4	5,3	60
32x3	1 1/4x3,05	37,6	38,4	5,7	
38x3	1 1/2x3,05	43,2	43,9	5,4	70
38x4	1 1/2x4,05	*	*	5,8	

* For further information on the flaring diameter please contact our offices

290. ASSEMBLY INSTRUCTIONS FOR SWIVEL NUT FITTINGS SERIES DIN 2353 – SAE J514 – BSI 5200

1. Before to start to assemble check for the correct parameters of all the tools to be used and substitute those not complying to the requirements.

2. Clean nut, fitting and tube and lubricate with suggested products.

3. Check the correct alignment of the parts involved, then using a wrench tighten until reaching the metal to metal contact of the conical parts

4. Repeated assembly and disassembly will not alter the functionality of the products.

5. Please refer to the related tables for the correct tightening torques to be applied.

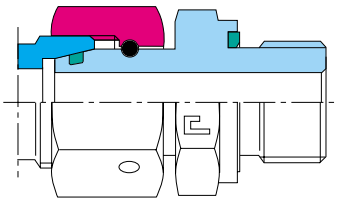

DIN 2353 swivel nut fitting – Series 60..

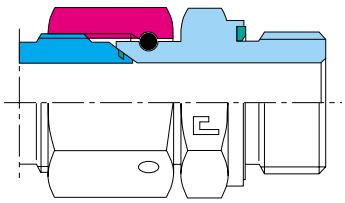

SAE J514 swivel nut fitting – Series 20..

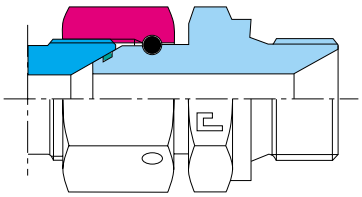

BSI 5200 swivel nut fitting – Series 30..

ASSEMBLY INSTRUCTIONS FOR ADJUSTABLE FITTINGS

ISO 6149 Metric thread
ISO 11926 UNF/UN-2A thread

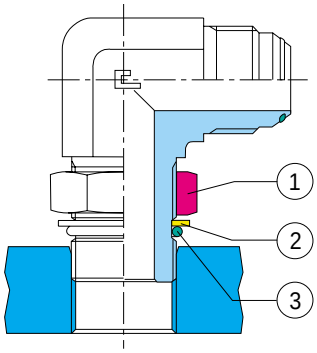

1 Back up hexagonal nut

2 Back up sleeve

3 O-ring

4 Retaining ring

BSPP Thread (In revision phase)
ISO 6149 Metric thread with retaining ring

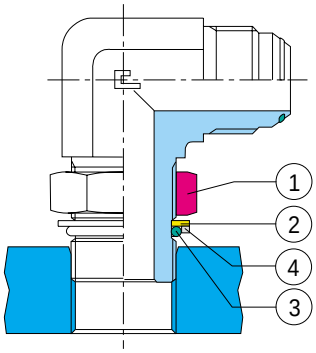

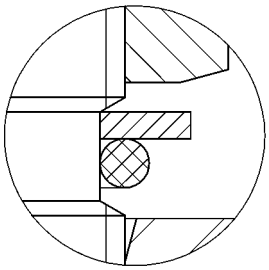

Lubricate the o-ring.
Unscrew the back up hexagonal nut and check that the back up sleeve is positioned as in the side picture.
The correct position of the back up sleeve may be obtained when the fitting is screwed into the female thread.

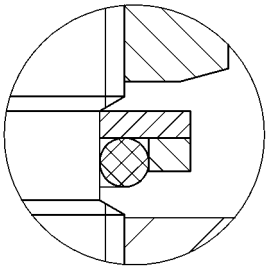

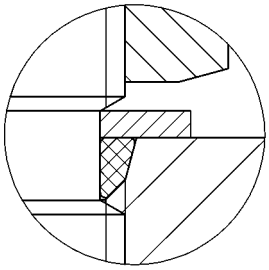

Lubricate the o-ring.
Screw the fitting in to the point that the back up sleeve is in contact with the base of the female checking that the o-ring is positioned correctly into its shaped housing.

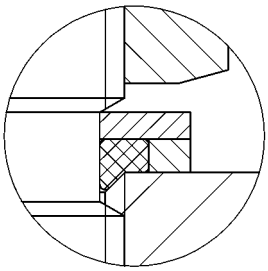

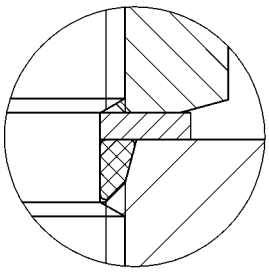

Unscrew the fitting up to a maximum of 1 turn to obtain the desired positioning.
Keep the fitting still with a wrench and block the back up hexagonal nut.
Please refer to the related tables for the correct tightening torques to be applied.

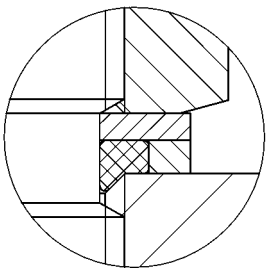

N.B. To obtain the ISO 6149 type of sealing please take out the retaining ring from the standard fitting.

CUTTING RING "B3" - CUTTING RING "B4"

Type: **1001..** B3 Ring

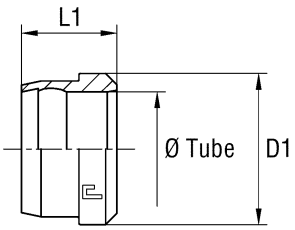

Type: **1001...4** B4 Ring

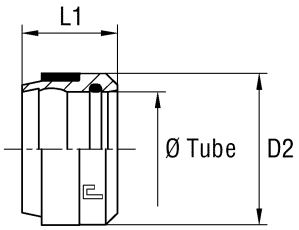

Serie	Bar	Ordering B3 Ring	Ø Tube	L1	D1	D2	Ordering B4 Ring
LL	100	100101	4	6	6	-	-
		100102	6	7	8	-	-
		100103	8	7	10	-	-
L	315	100104	6	9,5	10	10	100104.4
		100105	8	9,5	12	12	100105.4
		100106	10	10	14	14	100106.4
		100107	12	10	16	16	100107.4
		100108	15	10	19	20	100108.4
		100109	18	10	23	23	100109.4
	160	100110	22	10,5	27	27	100110.4
		100111	28	11	33	33	100111.4
		100112	35	13	41	41	100112.4
		100113	42	13	48	48	100113.4
S	630	100104	6	9,5	10	10	100114.4
		100105	8	9,5	12	12	100115.4
		100106	10	10	14	14	100116.4
		100107	12	10	16	16	100117.4
		100118	14	10	19	19	100118.4
	400	100119	16	10,5	21	21	100119.4
		100120	20	12	26	26	100120.4
		100121	25	12	32	32	100121.4
		100122	30	13	36	38	100122.4
	315	100123	38	13	44	48	100123.4

Note: If you wish to order a fitting in stainless steel, please change the first two digit from **10..** to **11..**

TIGHTNING NUT

Type: **1002..**

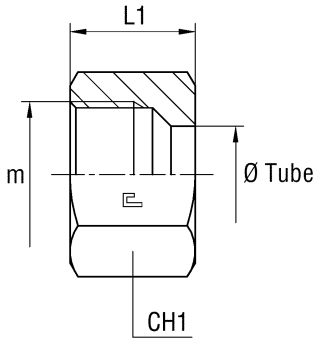

Serie	Bar	Ordering Nut	Ø Tube	m	L1	CH1
LL	100	100201	4	8x1	11	10
		100202	6	10x1	11,5	12
		100203	8	12x1	12	14
L	315	100204	6	12x1,5	14,5	14
		100205	8	14x1,5	14,5	17
		100206	10	16x1,5	15,5	19
		100207	12	18x1,5	15,5	22
		100208	15	22x1,5	17	27
		100209	18	26x1,5	18	32
	160	100210	22	30x2	20	36
		100211	28	36x2	21	41
		100212	35	45x2	24	50
		100213	42	52x2	24	60
S	630	100214	6	14x1,5	16,5	17
		100215	8	16x1,5	16,5	19
		100216	10	18x1,5	17,5	22
		100217	12	20x1,5	17,5	24
		100218	14	22x1,5	20,5	27
	400	100219	16	24x1,5	20,5	30
		100220	20	30x2	24	36
		100221	25	36x2	27	46
		100222	30	42x2	29	50
	315	100223	38	52x2	32,5	60

Note: If you wish to order a fitting in stainless steel, please change the first two digit from **10..** to **11..**

MALE STUD COUPLING Thread BSP Parallel

Type: **1003…1** Only Body

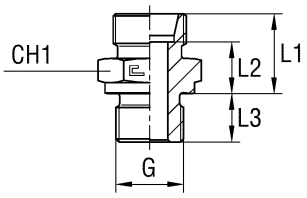

Type: **1003..** B3 Ring

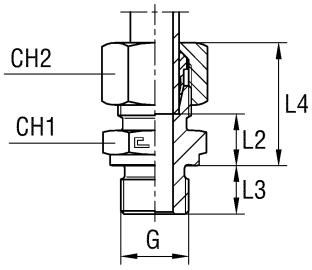

1003…4 B4 Ring

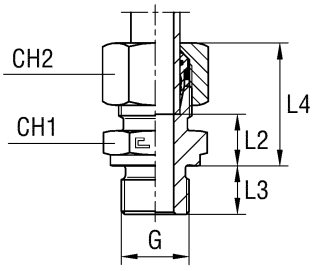

Serie	Bar	Ordering Body	Ordering Equipped B3	Ø Tube	G	L1	L2	L3	L4	CH1	CH2	Ordering Equipped B4
L	315	100304.1	100304	6	1/8	15,5	8,5	8	23	14	14	100304.4
		100305.1	100305	8	1/4	17	10	12	25	19	17	100305.4
		100306.1	100306	10	1/4	18	11	12	26	19	19	100306.4
		100307.1	100307	12	3/8	19,5	12,5	12	27	22	22	100307.4
		100308.1	100308	15	1/2	21	14	14	29	27	27	100308.4
		100309.1	100309	18	1/2	22	14,5	14	31	27	32	100309.4
	160	100310.1	100310	22	3/4	24	16,5	16	33	32	36	100310.4
		100311.1	100311	28	1	25	17,5	18	34	41	41	100311.4
		100312.1	100312	35	1 1/4	28	17,5	20	39	50	50	100312.4
		100313.1	100313	42	1 1/2	30	19	22	42	55	60	100313.4
S	630	100314.1	100314	6	1/4	20	13	12	28	19	17	100314.4
		100315.1	100315	8	1/4	22	15	12	30	19	19	100315.4
		100316.1	100316	10	3/8	22,5	15	12	31	22	22	100316.4
		100317.1	100317	12	3/8	24,5	17	12	33	22	24	100317.4
		100318.1	100318	14	1/2	27	19	14	37	27	27	100318.4
	400	100319.1	100319	16	1/2	27	18,5	14	37	27	30	100319.4
		100320.1	100320	20	3/4	31	20,5	16	42	32	36	100320.4
		100321.1	100321	25	1	35	23	18	47	41	46	100321.4
		100322.1	100322	30	1 1/4	37	23,5	20	50	50	50	100322.4
	315	100323.1	100323	38	1 1/2	42	26	22	57	55	60	100323.4
L	315	100324.1*	100324*	6	1/4	17	10	12	24,5	19	14	100324.4*
		100325.1*	100325*	8	1/8	16,5	9,5	8	24,5	14	17	100325.4*
		100326.1*	100326*	8	3/8	18,5	11,5	12	26,5	22	17	100326.4*
		100327.1*	100327*	8	1/2	19	12	14	27	27	17	100327.4*
		100328.1*	100328*	10	1/8	17,5	10,5	8	25,5	17	19	100328.4*
		100329.1*	100329*	10	3/8	19,5	12,5	12	27,5	22	19	100329.4*
		100330.1*	100330*	10	1/2	20	13	14	28	27	19	100330.4*
		100331.1*	100331*	12	1/4	19	12	12	26,5	19	22	100331.4*
		100332.1*	100332*	12	1/2	20	13	14	27,5	27	22	100332.4*
		100333.1*	100333*	15	3/8	20,5	13,5	12	28,5	24	27	100333.4*
		100334.1*	100334*	18	3/4	22	14,5	16	31	32	32	100334.4*
S	630	100335.1*	100335*	12	1/2	25	17,5	14	33,5	27	24	100335.4*
		100336.1*	100336*	14	3/8	26,5	18,5	12	36,5	24	27	100336.4*
	400	100337.1*	100337*	16	3/8	26,5	18	12	36,5	27	30	100337.4*
		100338.1*	100338*	20	1/2	31	20,5	14	42	32	36	100338.4*
		100339.1*	100339*	25	3/4	35	23	16	47	41	46	100339.4*
		100340.1*	100340*	30	1	37	23,5	18	50	46	50	100340.4*
	630	100341.1*	100341*	8	3/8	22,5	15,5	12	30,5	22	19	100341.4*
		100342.1*	100342*	10	1/4	22	14,5	12	30,5	19	22	100342.4*
		100343.1*	100343*	10	1/2	25	17,5	14	33,5	27	22	100343.4*
		100344.1*	100344*	12	1/4	24	16,5	12	32,5	22	24	100344.4*
	400	100345.1*	100345*	16	3/4	29	20,5	16	39	32	30	100345.4*
		100346.1*	100346*	20	1	33	22,5	18	44	41	36	100346.4*
	315	100347.1*	100347*	38	1 1/4	42	26	20	57	55	60	100347.4*
L	315	100348.1*	100348*	15	3/4	22	15	16	30	32	27	100348.4*
	160	100349.1*	100349*	22	1/2	24	16,5	14	33	32	36	100349.4*
		100350.1*	100350*	22	1	25	17,5	18	34	41	36	100350.4*
		100351.1*	100351*	28	3/4	25	17,5	16	34	41	41	100351.4*
		100352.1*	100352*	35	1	28	17,5	18	39	46	50	100352.4*
	315	100353.1*	100353*	6	3/8	18,5	11,5	12	26	22	14	100353.4*
	160	100354.1*	100354*	42	1 1/4	30	19	20	42	55	60	100354.4*

Note: If you wish to order a fitting in stainless steel, please change the first two digit from **10..** to **11..**
*Articles available on request only

MALE STUD COUPLING Thread Metric Parallel

Type: **1004…1** Solo Corpo

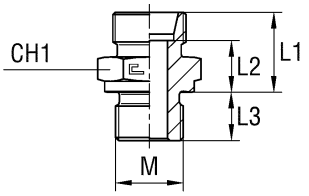

Type: **1004..** B3 Ring

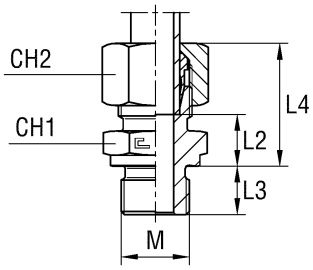

1004…4 B4 Ring

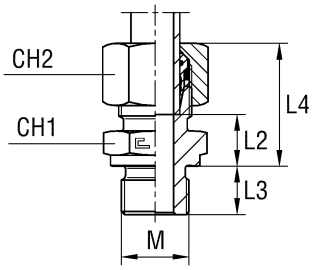

Serie	Bar	Ordering Body	Ordering Equipped B3	Ø Tube	M	L1	L2	L3	L4	CH1	CH2	Ordering Equipped B4
L	315	100404.1	100404	6	10x1	15,5	8,5	8	23	14	14	100404.4
		100405.1	100405	8	12x1,5	17	10	12	25	17	17	100405.4
		100406.1	100406	10	14x1,5	18	11	12	26	19	19	100406.4
		100407.1	100407	12	16x1,5	19,5	12,5	12	27	22	22	100407.4
		100408.1	100408	15	18x1,5	20,5	13,5	12	29	24	27	100408.4
		100409.1	100409	18	22x1,5	22	14,5	14	31	27	32	100409.4
	160	100410.1	100410	22	26x1,5	24	16,5	16	33	32	36	100410.4
		100411.1	100411	28	33x2	25	17,5	18	34	41	41	100411.4
		100412.1	100412	35	42x2	28	17,5	20	39	50	50	100412.4
		100413.1	100413	42	48x2	30	19	22	42	55	60	100413.4
S	630	100414.1	100414	6	12x1,5	20	13	12	28	17	17	100414.4
		100415.1	100415	8	14x1,5	22	15	12	30	19	19	100415.4
		100416.1	100416	10	16x1,5	22,5	15	12	31	22	22	100416.4
		100417.1	100417	12	18x1,5	24,5	17	12	33	24	24	100417.4
		100418.1	100418	14	20x1,5	27	19	14	37	27	27	100418.4
	400	100419.1	100419	16	22x1,5	27	18,5	14	37	27	30	100419.4
		100420.1	100420	20	27x2	31	20,5	16	42	32	36	100420.4
		100421.1	100421	25	33x2	35	23	18	47	41	46	100421.4
		100422.1	100422	30	42x2	37	23,5	20	50	50	50	100422.4
	315	100423.1	100423	38	48x2	42	26	22	57	55	60	100423.4
L	315	100425.1*	100425*	8	18x1,5	18,5	11,5	12	26,5	24	17	100425.4*
		100426.1*	100426*	10	16x1,5	19,5	12,5	12	27,5	22	19	100426.4*
		100427.1*	100427*	10	18x1,5	19,5	12,5	12	27,5	24	19	100427.4*
		100428.1*	100428*	10	22x1,5	21	14	14	29	27	19	100428.4*
		100429.1*	100429*	12	14x1,5	19,5	12,5	12	27	19	22	100429.4*
		100430.1*	100430*	12	18x1,5	19,5	12,5	12	27	24	22	100430.4*
		100431.1*	100431*	12	22x1,5	21	14	14	28,5	27	22	100431.4*
		100432.1*	100432*	15	16x1,5	20	13	12	28	24	27	100432.4*
		100433.1*	100433*	15	22x1,5	22	15	14	30	27	27	100433.4*
		100434.1*	100434*	18	18x1,5	21,5	14	12	30,5	27	32	100434.4*
	160	100435.1*	100435*	22	22x1,5	24	16,5	14	33	32	36	100435.4*
S	630	100436.1*	100436*	12	22x1,5	25	17,5	14	33,5	27	24	100436.4*
	400	100437.1*	100437*	16	18x1,5	26,5	18	12	36,5	27	30	100437.4*
		100438.1*	100438*	20	22x1,5	31	20,5	14	42	32	36	100438.4*
		100439.1*	100439*	25	27x2	35	23	16	47	41	46	100439.4*
		100440.1*	100440*	30	33x2	37	23,5	18	50	46	50	100440.4*
L	315	100441.1*	100441*	8	10x1	16,5	8,5	8	24,5	14	17	100441.4*

Note: If you wish to order a fitting in stainless steel, please change the first two digit from **10..** to **11..**
*Articles available on request only

MALE STUD COUPLING WITH ELASTOMER SEAl Thread BSP Parallel

Type: **1005...1** Only Body

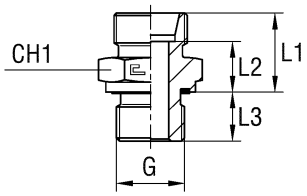

Type: **1005..** B3 Ring

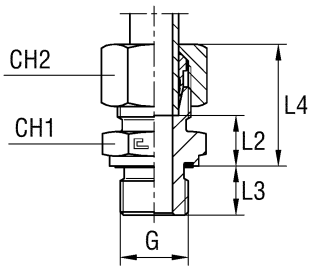

Type: **1005...4** B4 Ring

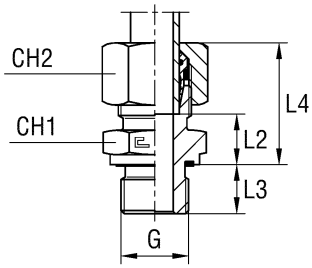

Serie	Bar	Ordering Body	Ordering Equipped B3	Ø Tube	G	L1	L2	L3	L4	CH1	CH2	Ordering Equipped B4
LL	100	100501.1	100501	4	1/8	13,5	9,5	8	20	14	10	-
		100502.1	100502	6	1/8	13,5	8	8	20	14	12	-
		100503.1	100503	8	1/8	14,5	9	8	21	14	14	-
L	315	100504.1	100504	6	1/8	15,5	8,5	8	23	14	14	100504.4
		100505.1	100505	8	1/4	17	10	12	25	19	17	100505.4
		100506.1	100506	10	1/4	18	11	12	26	19	19	100506.4
		100507.1	100507	12	3/8	19,5	12,5	12	27	22	22	100507.4
		100508.1	100508	15	1/2	21	14	14	29	27	27	100508.4
		100509.1	100509	18	1/2	22	14,5	14	31	27	32	100509.4
	160	100510.1	100510	22	3/4	24	16,5	16	33	32	36	100510.4
		100511.1	100511	28	1	25	17,5	18	34	41	41	100511.4
		100512.1	100512	35	1 1/4	28	17,5	20	39	50	50	100512.4
		100513.1	100513	42	1 1/2	30	19	22	42	55	60	100513.4
S	630	100514.1	100514	6	1/4	20	13	12	28	19	17	100514.4
		100515.1	100515	8	1/4	22	15	12	30	19	19	100515.4
		100516.1	100516	10	3/8	22,5	15	12	31	22	22	100516.4
		100517.1	100517	12	3/8	24,5	17	12	33	22	24	100517.4
		100518.1	100518	14	1/2	27	19	14	37	27	27	100518.4
	400	100519.1	100519	16	1/2	27	18,5	14	37	27	30	100519.4
		100520.1	100520	20	3/4	31	20,5	16	42	32	36	100520.4
		100521.1	100521	25	1	35	23	18	47	41	46	100521.4
		100522.1	100522	30	1 1/4	37	23,5	20	50	50	50	100522.4
	315	100523.1	100523	38	1 1/2	42	26	22	57	55	60	100523.4
L	315	100524.1	100524	6	1/4	17	10	12	24,5	19	14	100524.4
		100525.1	100525	8	1/8	16,5	9,5	8	24,5	14	17	100525.4
		100526.1	100526	8	3/8	18,5	11,5	12	26,5	22	17	100526.4
		100527.1	100527	8	1/2	19	12	14	27	27	17	100527.4
		100528.1	100528	10	1/8	17,5	10,5	8	25,5	17	19	100528.4
		100529.1	100529	10	3/8	19,5	12,5	12	27,5	22	19	100529.4
		100530.1	100530	10	1/2	20	13	14	28	27	19	100530.4
		100531.1	100531	12	1/4	19	12	12	26,5	19	22	100531.4
		100532.1	100532	12	1/2	20	13	14	27,5	27	22	100532.4
		100533.1	100533	15	3/8	20,5	13,5	12	28,5	24	27	100533.4
		100534.1	100534	18	3/4	22	14,5	16	31	32	32	100534.4
S	630	100535.1	100535	12	1/2	25	17,5	14	33,5	27	24	100535.4
		100536.1	100536	14	3/8	26,5	18,5	12	36,5	24	27	100536.4
	400	100537.1	100537	16	3/8	26,5	18	12	36,5	27	30	100537.4
		100538.1	100538	20	1/2	31	20,5	14	42	32	36	100538.4
		100539.1	100539	25	3/4	35	23	16	47	41	46	100539.4
		100540.1	100540	30	1	37	23,5	18	50	46	50	100540.4
	630	100541.1	100541	8	3/8	22,5	15,5	12	30,5	22	19	100541.4
		100542.1	100542	10	1/4	22	14,5	12	30,5	19	22	100542.4
		100543.1	100543	10	1/2	25	17,5	14	33,5	27	22	100543.4
		100544.1	100544	12	1/4	24	16,5	12	32,5	22	24	100544.4
	400	100545.1	100545	16	3/4	29	20,5	16	39	32	30	100545.4
		100546.1	100546	20	1	33	22,5	18	44	41	36	100546.4
	315	100547.1	100547	38	1 1/4	42	26	20	57	55	60	100547.4
L	315	100548.1	100548	15	3/4	22	15	16	30	32	27	100548.4
	160	100549.1	100549	22	1/2	24	16,5	14	33	32	36	100549.4
		100550.1	100550	22	1	25	17,5	18	34	41	36	100550.4
		100551.1	100551	28	3/4	25	17,5	16	34	41	41	100551.4
		100552.1	100552	35	1	28	17,5	18	39	46	50	100552.4
	315	100553.1	100553	6	3/8	18,5	11,5	12	26	22	14	100553.4
	160	100554.1	100554	42	1 1/4	30	19	20	42	55	60	100554.4

Note: If you wish to order a fitting in stainless steel, please change the first two digit from **10..** to **11..**

MALE STUD COUPLING WITH ELASTOMER SEA Thread Metric Parallel

Type: **1006...1** Only Body

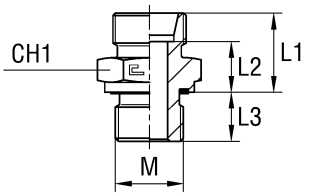

Type: **1006..** B3 Ring

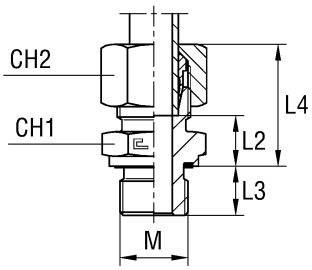

Type: **1006...4** B4 Ring

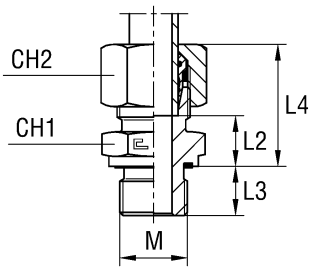

Serie	Bar	Ordering Body	Ordering Equipped B3	Ø Tube	M	L1	L2	L3	L4	CH1	CH2	Ordering Equipped B4
LL	100	100601.1	100601	4	8x1	13,5	9,5	8	20	12	10	-
		100602.1	100602	6	10x1	13,5	8	8	20	14	12	-
		100603.1	100603	8	10x1	14,5	9	8	21	14	14	-
L	315	100604.1	100604	6	10x1	15,5	8,5	8	23	14	14	100604.4
		100605.1	100605	8	12x1,5	17	10	12	25	17	17	100605.4
		100606.1	100606	10	14x1,5	18	11	12	26	19	19	100606.4
		100607.1	100607	12	16x1,5	19,5	12,5	12	27	22	22	100607.4
		100608.1	100608	15	18x1,5	20,5	13,5	12	29	24	27	100608.4
		100609.1	100609	18	22x1,5	22	14,5	14	31	27	32	100609.4
	160	100610.1	100610	22	26x1,5	24	16,5	16	33	32	36	100610.4
		100611.1	100611	28	33x2	25	17,5	18	34	41	41	100611.4
		100612.1	100612	35	42x2	28	17,5	20	39	50	50	100612.4
		100613.1	100613	42	48x2	30	19	22	42	55	60	100613.4
S	630	100614.1	100614	6	12x1,5	20	13	12	28	17	17	100614.4
		100615.1	100615	8	14x1,5	22	15	12	30	19	19	100615.4
		100616.1	100616	10	16x1,5	22,5	15	12	31	22	22	100616.4
		100617.1	100617	12	18x1,5	24,5	17	12	33	24	24	100617.4
		100618.1	100618	14	20x1,5	27	19	14	37	27	27	100618.4
	400	100619.1	100619	16	22x1,5	27	18,5	14	37	27	30	100619.4
		100620.1	100620	20	27x2	31	20,5	16	42	32	36	100620.4
		100621.1	100621	25	33x2	35	23	18	47	41	46	100621.4
		100622.1	100622	30	42x2	37	23,5	20	50	50	50	100622.4
	315	100623.1	100623	38	48x2	42	26	22	57	55	60	100623.4
L	315	100625.1	100625	8	18x1,5	18,5	11,5	12	26,5	24	17	100625.4
		100626.1	100626	10	16x1,5	19,5	12,5	12	27,5	22	19	100626.4
		100627.1	100627	10	18x1,5	19,5	12,5	12	27,5	24	19	100627.4
		100628.1	100628	10	22x1,5	21	14	14	29	27	19	100628.4
		100629.1	100629	12	14x1,5	19,5	12,5	12	27	19	22	100629.4
		100630.1	100630	12	18x1,5	19,5	12,5	12	27	24	22	100630.4
		100631.1	100631	12	22x1,5	21	14	14	28,5	27	22	100631.4
		100632.1	100632	15	16x1,5	20	13	12	28	24	27	100632.4
		100633.1	100633	15	22x1,5	22	15	14	30	27	27	100633.4
		100634.1	100634	18	18x1,5	21,5	14	12	30,5	27	32	100634.4
	160	100635.1	100635	22	22x1,5	24	16,5	14	33	32	36	100635.4
S	630	100636.1	100636	12	22x1,5	25	17,5	14	33,5	27	24	100636.4
	400	100637.1	100637	16	18x1,5	26,5	18	12	36,5	27	30	100637.4
		100638.1	100638	20	22x1,5	31	20,5	14	42	32	36	100638.4
		100639.1	100639	25	27x2	35	23	16	47	41	46	100639.4
		100640.1	100640	30	33x2	37	23,5	18	50	46	50	100640.4
L	315	100641.1	100641	8	10x1	16,5	8,5	8	24,5	14	17	100641.4

Note: If you wish to order a fitting in stainless steel, please change the first two digit from **10..** to **11..**

FEMALE STUD COUPLING Thread BSP Parallel - Thread Metric Parall

Type: **1007...1** Only Body
Type: **1008...1** Only Body

Type: **1007..** B3 Ring
Type: **1008..** B3 Ring

Type: **1007...4** B4 Ring
Type: **1008...4** B4 Ring

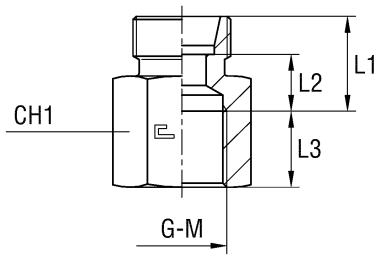

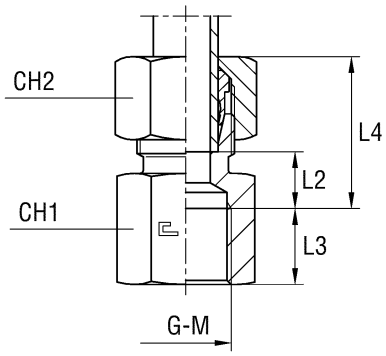

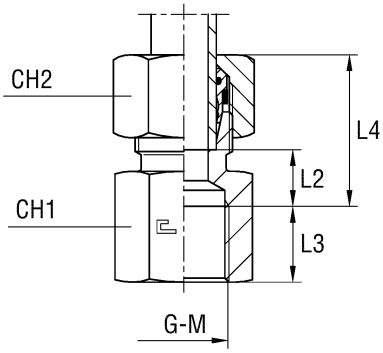

Serie	Bar	Ordering Body	Ordering Equipped B3	Ø Tube	G	L1	L2	L3	L4	CH1	CH2	Ordering Equipped B4
L	315	100704.1	100704	6	1/8	16	9	10	23,5	14	14	100704.4
		100705.1	100705	8	1/4	17	10	14	25	19	17	100705.4
		100706.1	100706	10	1/4	18	11	14	26	19	19	100706.4
		100707.1	100707	12	3/8	19	12	14	26,5	24	22	100707.4
		100708.1	100708	15	1/2	21	14	17	29	27	27	100708.4
		100709.1	100709	18	1/2	21	13,5	17	30	27	32	100709.4
	160	100710.1	100710	22	3/4	24	16,5	19	33	36	36	100710.4
		100711.1	100711	28	1	23,5	16	21,5	32,5	41	41	100711.4
		100712.1	100712	35	1 1/4	28,5	18	23,5	39,5	55	50	100712.4
		100713.1	100713	42	1 1/2	28,5	17,5	25,5	40,5	60	60	100713.4
S	630	100714.1	100714	6	1/4	19	12	14	27	19	17	100714.4
		100715.1	100715	8	1/4	19	12	14	27	19	19	100715.4
		100716.1	100716	10	3/8	20	12,5	14	28,5	24	22	100716.4
		100717.1	100717	12	3/8	20	12,5	14	28,5	24	24	100717.4
		100718.1	100718	14	1/2	23	15	17	33	30	27	100718.4
	400	100719.1	100719	16	1/2	23	14,5	17	33	30	30	100719.4
		100720.1	100720	20	3/4	26	15,5	19	37	36	36	100720.4
		100721.1	100721	25	1	27,5	15,5	21,5	39,5	41	46	100721.4
		100722.1	100722	30	1 1/4	32,5	19	23,5	45,5	55	50	100722.4
	315	100723.1	100723	38	1 1/2	34,5	18,5	25,5	49,5	60	60	100723.4

Note: If you wish to order a fitting in stainless steel, please change the first two digit from **10..** to **11..**

Serie	Bar	Ordering Body	Ordering Equipped B3	Ø Tube	M	L1	L2	L3	L4	CH1	CH2	Ordering Equipped B4
L	315	100804.1	100804	6	10x1	16	9	10	23,5	14	14	100804.4
		100805.1	100805	8	12x1,5	16,5	9,5	14,5	24,5	17	17	100805.4
		100806.1	100806	10	14x1,5	17,5	10,5	14,5	25,5	19	19	100806.4
		100807.1	100807	12	16x1,5	18,5	11,5	14,5	26	22	22	100807.4
		100808.1	100808	15	18x1,5	23,5	16,5	14,5	31,5	24	27	100808.4
		100809.1	100809	18	22x1,5	21,5	14	16,5	30,5	30	32	100809.4
	160	100810.1	100810	22	26x1,5	23,5	16	18,5	32,5	32	36	100810.4
		100811.1	100811	28	33x2	24	16,5	21	33	41	41	100811.4
		100812.1	100812	35	42x2	28	17,5	23	39	55	50	100812.4
		100813.1	100813	42	48x2	29	18	25	41	60	60	100813.4
S	630	100814.1	100814	6	12x1,5	18,5	11,5	14,5	26,5	17	17	100814.4
		100815.1	100815	8	14x1,5	18,5	11,5	14,5	26,5	19	19	100815.4
		100816.1	100816	10	16x1,5	19,5	12	14,5	28	22	22	100816.4
		100817.1	100817	12	18x1,5	19,5	12	14,5	28	24	24	100817.4
		100818.1	100818	14	20x1,5	23,5	15,5	16,5	33,5	27	27	100818.4
	400	100819.1	100819	16	22x1,5	23,5	15	16,5	33,5	30	30	100819.4
		100820.1	100820	20	27x2	26	15,5	19	37	36	36	100820.4
		100821.1	100821	25	33x2	28	16	21	40	41	46	100821.4
		100822.1	100822	30	42x2	33	19,5	23	46	55	50	100822.4
	315	100823.1	100823	38	48x2	35	19	25	50	60	60	100823.4

Note: If you wish to order a fitting in stainless steel, please change the first two digit from **10..** to **11..**
Articles available on request only

MALE STUD COUPLING WITH O-RING Thread UNF/UN-2A

Type: **1009…1** Only Body

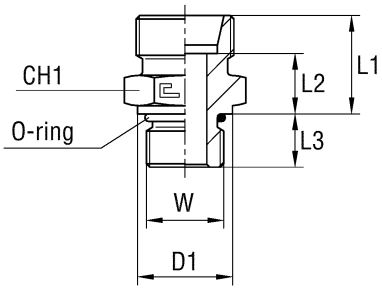

Type: **1009..** B3 Ring

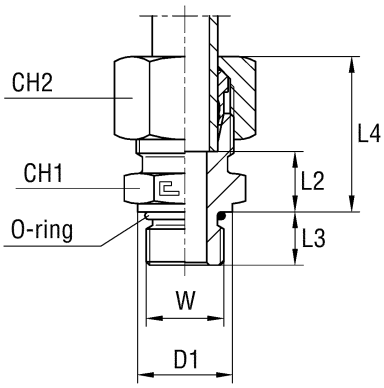

Type: **1009…4** B4 Ring

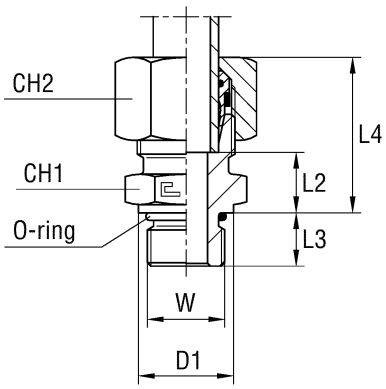

Serie	Bar	Ordering Body	Ordering Equipped B3	Ø Tube	W	D1	L1	L2	L3	L4	CH1	CH2	Ordering Equipped B4
L	315	100904.1	100904	6	7/16-20	13,8	16,9	9,9	9,1	24,5	14	14	100904.4
		100905.1	100905	8	1/2-20	16,8	16,9	9,9	9,1	25	17	17	100905.4
		100906.1	100906	10	1/2-20	16,8	17,9	10,9	9,1	26	17	19	100906.4
		100907.1	100907	12	9/16-18	18,8	18	11	10	25,5	19	22	100907.4
		100908.1	100908	15	3/4-16	21,8	20,9	13,9	11,1	29	24	27	100908.4
		100909.1	100909	18	3/4-16	21,8	21,9	14,4	11,1	31	27	32	100909.4
	160	100910.1	100910	22	11/16-12	31,8	23,9	16,4	15,1	33	32	36	100910.4
		100911.1	100911	28	15/16-12	40,8	24,9	17,4	15,1	34	41	41	100911.4
		100912.1	100912	35	15/8-12	49,8	27,9	17,4	15,1	39	50	50	100912.4
		100913.1	100913	42	17/8-12	54,8	29,9	18,9	15,1	42	55	60	100913.4
S	630	100914.1	100914	6	1/2-20	16,8	21,9	14,9	9,1	30	17	17	100914.4
		100915.1	100915	8	1/2-20	16,8	21,9	14,9	9,1	30	17	19	100915.4
		100916.1	100916	10	9/16-18	18,8	22	14,5	10	30,5	19	22	100916.4
		100917.1	100917	12	9/16-18	18,8	22	14,5	10	30,5	22	24	100917.4
		100918.1	100918	14	3/4-16	21,8	23,9	15,9	11,1	34	24	27	100918.4
	400	100919.1	100919	16	3/4-16	21,8	23,9	15,4	11,1	34	27	30	100919.4
		100920.1	100920	20	11/16-12	31,8	30,9	20,4	15,1	42	32	36	100920.4
		100921.1	100921	25	15/16-12	40,8	34,9	22,9	15,1	47	41	46	100921.4
		100922.1	100922	30	15/8-12	49,8	36,9	23,4	15,1	50	50	50	100922.4
	315	100923.1	100923	38	17/8-12	54,8	41,9	25,9	15,1	57	55	60	100923.4
L	315	100924.1	100924	8	7/16-20	13,8	16,9	9,9	9,1	25	14	17	100924.4
		100925.1	100925	10	7/16-20	13,8	17,9	10,9	9,1	26	17	19	100925.4
		100926.1	100926	12	3/4-16	21,8	19,9	12,9	11,1	27,5	22	22	100926.4
		100927.1	100927	12	7/8-14	26,8	21,3	14,3	12,7	29	27	22	100927.4
		100928.1	100928	18	7/8-14	26,8	22,3	14,8	12,7	31,5	27	32	100928.4
	160	100929.1	100929	22	7/8-14	26,8	24,3	16,8	12,7	33,5	32	36	100929.4
		100930.1	100930	22	15/16-12	40,8	24,9	17,4	15,1	34	41	36	100930.4
		100931.1	100931	28	11/16-12	31,8	24,9	17,4	15,1	34	41	41	100931.4
		100932.1	100932	35	15/16-12	40,8	27,9	17,4	15,1	39	46	50	100932.4
		100933.1	100933	42	15/8-12	49,8	29,9	18,9	15,1	42	55	60	100933.4
S	630	100934.1	100934	8	7/16-20	13,8	21,9	14,9	9,1	30	17	19	100934.4
		100935.1	100935	12	3/4-16	21,8	24,9	17,4	11,1	33,5	22	24	100935.4
	400	100936.1	100936	16	7/8-14	26,8	27,3	18,8	12,7	37,5	27	30	100936.4
		100937.1	100937	20	3/4-16	21,8	30,9	20,4	11,1	42	32	36	100937.4
		100938.1	100938	20	7/8-14	26,8	31,3	20,8	12,7	42,5	32	36	100938.4
		100939.1	100939	25	11/16-12	31,8	34,9	22,9	15,1	47	36	46	100939.4
		100940.1	100940	30	15/16-12	40,8	36,9	23,4	15,1	50	46	50	100940.4
	315	100941.1	100941	38	15/8-12	49,8	41,9	25,9	15,1	57	55	60	100941.4

Note: If you wish to order a fitting in stainless steel, please change the first two digit from **10..** to **11..**
Articles available on scheduled orders only

STUD STANDPIPE ADAPTOR Thread NPT

Type: **10CT..P** Only Body

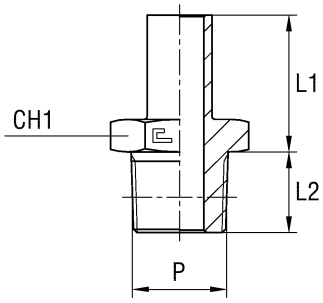

Type: **1010..** B3 Ring

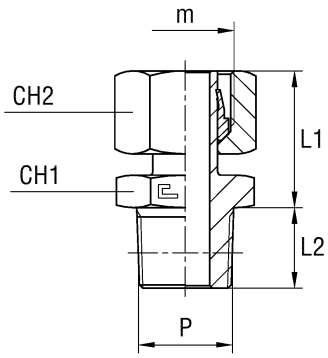

Type: **1010...4** B4 Ring

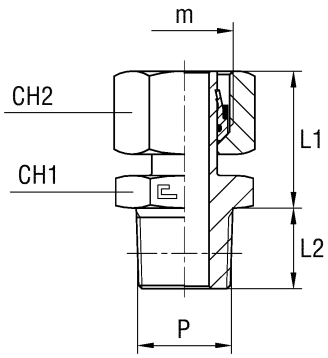

Serie	Bar	Ordering Body	Ordering Equipped B3	Ø Tube	m	P	L1	L2	CH1	CH2	Ordering Equipped B4
L	315	10CT04P	101004	6	12x1,5	1/8	23	10	12	14	101004.4
		10CT05P	101005	8	14x1,5	1/4	27,5	15	14	17	101005.4
		10CT06P	101006	10	16x1,5	1/4	25,5	15	14	19	101006.4
		10CT07P	101007	12	18x1,5	3/8	31,5	15	19	22	101007.4
		10CT08P	101008	15	22x1,5	1/2	29	19,5	22	27	101008.4
		10CT09P	101009	18	26x1,5	1/2	28,5	19,5	22	32	101009.4
	160	10CT10P	101010	22	30x2	3/4	29,5	20	27	36	101010.4
		10CT11P	101011	28	36x2	1	32	25	36	41	101011.4
		10CT12P	101012	35	45x2	1 1/4	39,5	25,5	46	50	101012.4
		10CT13P	101013	42	52x2	1 1/2	43,5	26	50	60	101013.4
S	630	10CT14P	101014	6	14x1,5	1/4	25	15	14	17	101014.4
		10CT15P	101015	8	16x1,5	1/4	27,5	15	14	19	101015.4
		10CT16P	101016	10	18x1,5	3/8	29,5	15	19	22	101016.4
		10CT17P	101017	12	20x1,5	3/8	31,5	15	19	24	101017.4
		10CT18P	101018	14	22x1,5	1/2	33,5	19,5	22	27	101018.4
	400	10CT19P	101019	16	24x1,5	1/2	34	19,5	22	30	101019.4
		10CT20P	101020	20	30x2	3/4	40	20	27	36	101020.4
		10CT21P	101021	25	36x2	1	45	25	36	46	101021.4
		10CT22P	101022	30	42x2	1 1/4	48	25,5	46	50	101022.4
	315	10CT23P	101023	38	52x2	1 1/2	57	26	50	60	101023.4

Note: If you wish to order a fitting in stainless steel, please change the first two digit from **10..** to **11..**
Articles not included in ISO 8434-1 norm available on scheduled orders only

STUD STANDPIPE ADAPTOR WITH ELASTOMER SEAL
Thread BSP Parallel - Thread Metric Parallel

Type: **10CTG..R** Only Body
Type: **10CTG..M** Only Body

Type: **1011..** B3 Ring
Type: **1012..** B3 Ring

Type: **1011...4** B4 Ring
Type: **1012...4** B4 Ring

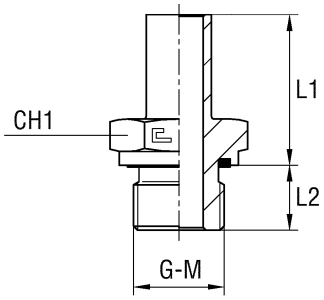

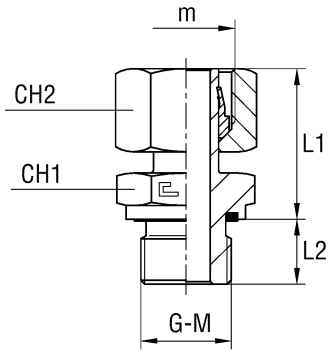

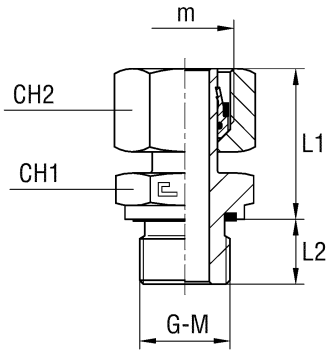

Serie	Bar	Ordering Body	Ordering Equipped B3	Ø Tube	m	G	L1	L2	CH1	CH2	Ordering Equipped B4
L	315	10CTG04R	101104	6	12x1,5	1/8	24,5	8	14	14	101104.4
		10CTG05R	101105	8	14x1,5	1/4	29,5	12	19	17	101105.4
		10CTG06R	101106	10	16x1,5	1/4	27,5	12	19	19	101106.4
		10CTG07R	101107	12	18x1,5	3/8	34	12	22	22	101107.4
		10CTG08R	101108	15	22x1,5	1/2	32	14	27	27	101108.4
		10CTG09R	101109	18	26x1,5	1/2	31,5	14	27	32	101109.4
	160	10CTG10R	101110	22	30x2	3/4	32,5	16	32	36	101110.4
		10CTG11R	101111	28	36x2	1	35	18	41	41	101111.4
		10CTG12R	101112	35	45x2	1 1/4	42,5	20	50	50	101112.4
		10CTG13R	101113	42	52x2	1 1/2	46,5	22	55	60	101113.4
S	630	10CTG14R	101114	6	14x1,5	1/4	27	12	19	17	101114.4
		10CTG15R	101115	8	16x1,5	1/4	29,5	12	19	19	101115.4
		10CTG16R	101116	10	18x1,5	3/8	32	12	22	22	101116.4
		10CTG17R	101117	12	20x1,5	3/8	34	12	22	24	101117.4
		10CTG18R	101118	14	22x1,5	1/2	36,5	14	27	27	101118.4
	400	10CTG19R	101119	16	24x1,5	1/2	37	14	27	30	101119.4
		10CTG20R	101120	20	30x2	3/4	43	16	32	36	101120.4
		10CTG21R	101121	25	36x2	1	48	18	41	46	101121.4
		10CTG22R	101122	30	42x2	1 1/4	51	20	50	50	101122.4
	315	10CTG23R	101123	38	52x2	1 1/2	60	22	55	60	101123.4

Note: If you wish to order a fitting in stainless steel, please change the first two digit from **10..** to **11..**

Serie	Bar	Ordering Body	Ordering Equipped B3	Ø Tube	m	M	L1	L2	CH1	CH2	Ordering Equipped B4
L	315	10CTG04M	101204	6	12x1,5	10x1	24,5	8	14	14	101204.4
		10CTG05M	101205	8	14x1,5	12x1,5	26,5	12	17	17	101205.4
		10CTG06M	101206	10	16x1,5	14x1,5	27,5	12	19	19	101206.4
		10CTG07M	101207	12	18x1,5	16x1,5	30,5	12	22	22	101207.4
		10CTG08M	101208	15	22x1,5	18x1,5	31,5	12	24	27	101208.4
		10CTG09M	101209	18	26x1,5	22x1,5	31,5	14	27	32	101209.4
	160	10CTG10M	101210	22	30x2	26x1,5	32,5	16	32	36	101210.4
		10CTG11M	101211	28	36x2	33x2	35	18	41	41	101211.4
		10CTG12M	101212	35	45x2	42x2	42,5	20	50	50	101212.4
		10CTG13M	101213	42	52x2	48x2	46,5	22	55	60	101213.4
S	630	10CTG14M	101214	6	14x1,5	12x1,5	27	12	17	17	101214.4
		10CTG15M	101215	8	16x1,5	14x1,5	29,5	12	19	19	101215.4
		10CTG16M	101216	10	18x1,5	16x1,5	32	12	22	22	101216.4
		10CTG17M	101217	12	20x1,5	18x1,5	34	12	24	24	101217.4
		10CTG18M	101218	14	22x1,5	20x1,5	36,5	14	27	27	101218.4
	400	10CTG19M	101219	16	24x1,5	22x1,5	37	14	27	30	101219.4
		10CTG20M	101220	20	30x2	27x2	43	16	32	36	101220.4
		10CTG21M	101221	25	36x2	33x2	48	18	41	46	101221.4
		10CTG22M	101222	30	42x2	42x2	51	20	50	50	101222.4
	315	10CTG23M	101223	38	52x2	48x2	60	22	55	60	101223.4

Note: If you wish to order a fitting in stainless steel, please change the first two digit from **10..** to **11..**

BANJO COUPLING WITH ALLOW SCREW AND ELASTOMER SEAL Thread BSP Parallel

Type: **1013…1** Only Body

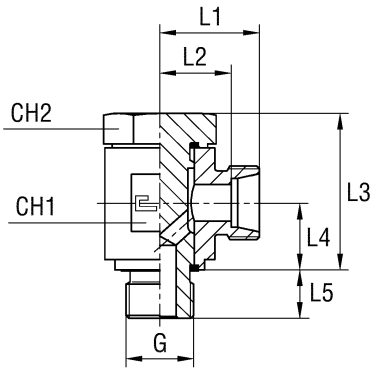

Type: **1013..** B3 Ring

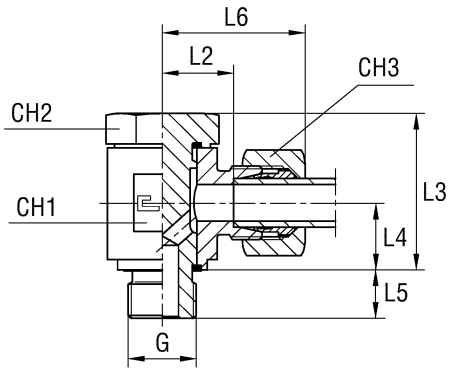

Type: **1013…4** B4 Ring

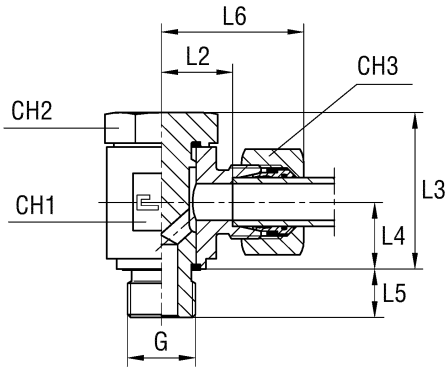

Serie	Bar	Ordering Body	Ordering Equipped B3	Ø Tube	G	L1	L2	L3	L4	L5	L6	CH1	CH2	CH3	Ordering Equipped B4
LL	100	101301.1	101301	4	1/8	18	14	18,5	10,5	8	24	17	17	10	-
		101302.1	101302	6	1/8	18	12,5	18,5	10,5	8	24	17	17	12	-
		101303.1	101303	8	1/8	19	13,5	18,5	10,5	8	25	17	17	14	-
L	315	101304.1	101304	6	1/8	19	12	18,5	10,5	8	27	17	17	14	101304.4
		101305.1	101305	8	1/4	21,5	14,5	25	14	12	29,5	22	19	17	101305.4
		101306.1	101306	10	1/4	22,5	15,5	25	14	12	30,5	22	19	19	101306.4
		101307.1	101307	12	3/8	25	18	30	16,5	12	33	27	24	22	101307.4
		101308.1	101308	15	1/2	29	22	37,5	21,5	14	37	32	30	27	101308.4
		101309.1	101309	18	1/2	29	21,5	37,5	21,5	14	38	32	30	32	101309.4
	160	101310.1	101310	22	3/4	34	26,5	44	24	16	43	41	36	36	101310.4
		101311.1	101311	28	1	38,5	31	55,5	30,5	18	47,5	50	46	41	101311.4
		101312.1	101312	35	1 1/4	45,5	35	65,5	35,5	20	56,5	60	55	50	101312.4
		101313.1	101313	42	1 1/2	50,5	39,5	75,5	40,5	22	62,5	70	60	60	101313.4
S	630	101314.1	101314	6	1/4	23,5	16,5	25	14	12	31,5	22	19	17	101314.4
		101315.1	101315	8	1/4	23,5	16,5	25	14	12	31,5	22	19	19	101315.4
		101316.1	101316	10	3/8	26	18,5	30	16,5	12	35	27	24	22	101316.4
		101317.1	101317	12	3/8	26	18,5	30	16,5	12	35	27	24	24	101317.4
		101318.1	101318	14	1/2	31	23	37,5	21,5	14	41	32	30	27	101318.4
	400	101319.1	101319	16	1/2	31	22,5	37,5	21,5	14	41	32	30	30	101319.4
		101320.1	101320	20	3/4	36	25,5	44	24	16	47	41	36	36	101320.4
		101321.1	101321	25	1	42,5	31,5	55,5	30,5	18	54,5	50	46	46	101321.4
		101322.1	101322	30	1 1/4	49,5	36	65,5	35,5	20	62,5	60	55	50	101322.4
	315	101323.1	101323	38	1 1/2	56,5	40,5	75,5	40,5	22	71,5	70	60	60	101323.4

Note: If you wish to order a fitting in stainless steel, please change the first two digit from **10..** to **11..**
Articles not included in ISO 8434-1 norm

BANJO COUPLING WITH ALLOW SCREW AND ELASTOMER SEAL Thread Metric Parallel

Type: **1014…1** Only Body

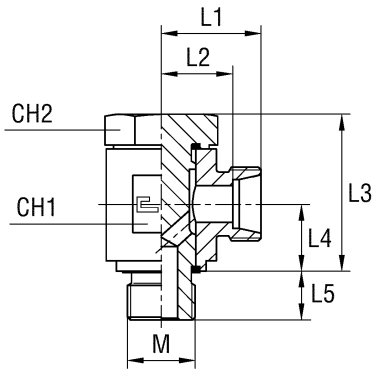

Type: **1014..** B3 Ring

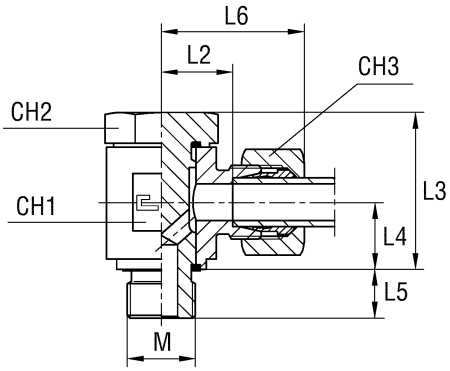

Type: **1014…4** B4 Ring

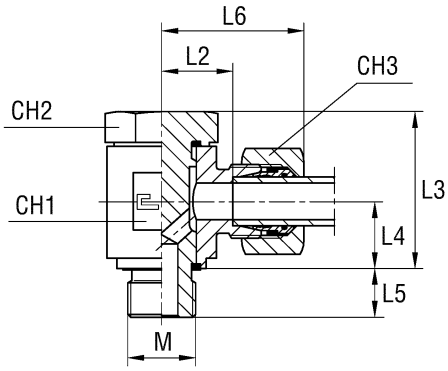

Serie	Bar	Ordering Body	Ordering Equipped B3	Ø Tube	M	L1	L2	L3	L4	L5	L6	CH1	CH2	CH3	Ordering Equipped B4
LL	100	101401.1	101401	4	8x1	18	14	18,5	10,5	8	24	17	14	10	-
		101402.1	101402	6	10x1	18	12,5	18,5	10,5	8	24	17	17	12	-
		101403.1	101403	8	10x1	19	13,5	18,5	10,5	8	25	17	17	14	-
L	315	101404.1	101404	6	10x1	19	12	18,5	10,5	8	27	17	17	14	101404.4
		101405.1	101405	8	12x1,5	21,5	14,5	25	14	12	29,5	22	19	17	101405.4
		101406.1	101406	10	14x1,5	22,5	15,5	25	14	12	30,5	22	19	19	101406.4
		101407.1	101407	12	16x1,5	25	18	30	16,5	12	33	27	24	22	101407.4
		101408.1	101408	15	18x1,5	29	22	33,5	18,5	12	37	32	27	27	101408.4
		101409.1	101409	18	22x1,5	29	21,5	37,5	21,5	14	38	32	30	32	101409.4
	160	101410.1	101410	22	26x1,5	34	26,5	44	24	16	43	41	36	36	101410.4
		101411.1	101411	28	33x2	38,5	31	55,5	30,5	18	47,5	50	46	41	101411.4
		101412.1	101412	35	42x2	45,5	35	65,5	35,5	20	56,5	60	55	50	101412.4
		101413.1	101413	42	48x2	50,5	39,5	75,5	40,5	22	62,5	70	60	60	101413.4
S	630	101414.1	101414	6	12x1,5	23,5	16,5	25	14	12	31,5	22	19	17	101414.4
		101415.1	101415	8	14x1,5	23,5	16,5	25	14	12	31,5	22	19	19	101415.4
		101416.1	101416	10	16x1,5	26	18,5	30	16,5	12	35	27	24	22	101416.4
		101417.1	101417	12	18x1,5	29	21,5	33,5	18,5	12	38	32	24	24	101417.4
		101418.1	101418	14	20x1,5	31	23	36	20	14	41	32	30	27	101418.4
	400	101419.1	101419	16	22x1,5	31	22,5	37,5	21,5	14	41	32	30	30	101419.4
		101420.1	101420	20	27x2	36	25,5	44	24	16	47	41	36	36	101420.4
		101421.1	101421	25	33x2	42,5	31,5	55,5	30,5	18	54,5	50	46	46	101421.4
		101422.1	101422	30	42x2	49,5	36	65,5	35,5	20	62,5	60	55	50	101422.4
	315	101423.1	101423	38	48x2	56,5	40,5	75,5	40,5	22	71,5	70	60	60	101423.4

Note: If you wish to order a fitting in stainless steel, please change the first two digit from **10..** to **11..**
Articles not included in ISO 8434-1 norm

BANJO TEE COUPLING WITH ALLOW SCREW AND ELASTOMER SEAL
Thread BSP Parallel - Thread Metric Parallel

Type: **1015...1** Only Body
Type: **1016...1** Only Body

Type: **1015..** B3 Ring
Type: **1016..** B3 Ring

Type: **1015..4** B4 Ring
Type: **1016..4** B4 Ring

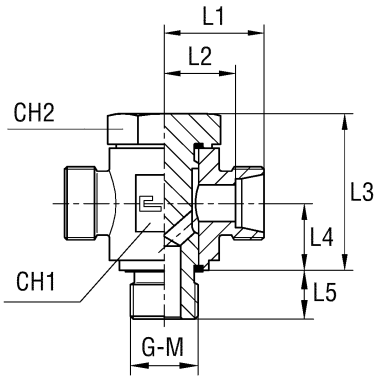

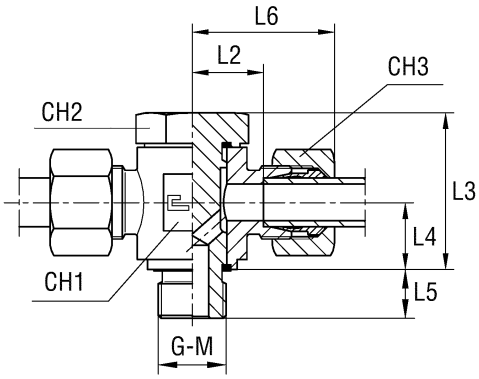

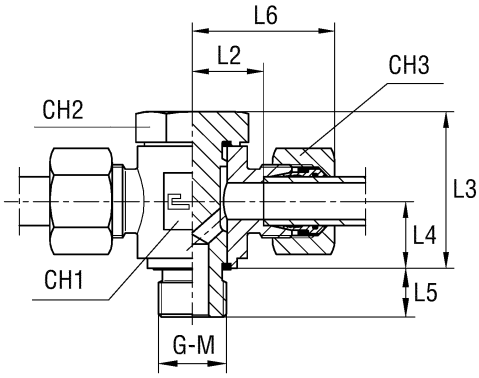

Serie	Bar	Ordering Body	Ordering Equipped B3	Ø Tube	G	L1	L2	L3	L4	L5	L6	CH1	CH2	CH3	Ordering Equipped B4
L	315	101504.1	101504	6	1/8	19	12	18,5	10,5	8	27	17	17	14	101504.4
		101505.1	101505	8	1/4	21,5	14,5	25	14	12	29,5	22	19	17	101505.4
		101506.1	101506	10	1/4	22,5	15,5	25	14	12	30,5	22	19	19	101506.4
		101507.1	101507	12	3/8	25	18	30	16,5	12	33	27	24	22	101507.4
		101508.1	101508	15	1/2	29	22	37,5	21,5	14	37	32	30	27	101508.4
		101509.1	101509	18	1/2	29	21,5	37,5	21,5	14	38	32	30	32	101509.4
	160	101510.1	101510	22	3/4	34	26,5	44	24	16	43	41	36	36	101510.4
		101511.1	101511	28	1	38,5	31	55,5	30,5	18	47,5	50	46	41	101511.4
		101512.1	101512	35	1 1/4	45,5	35	65,5	35,5	20	56,5	60	55	50	101512.4
		101513.1	101513	42	1 1/2	50,5	39,5	75,5	40,5	22	62,5	70	60	60	101513.4
S	630	101514.1	101514	6	1/4	23,5	16,5	25	14	12	31,5	22	19	17	101514.4
		101515.1	101515	8	1/4	23,5	16,5	25	12	12	31,5	22	19	19	101515.4
		101516.1	101516	10	3/8	26	18,5	30	16,5	12	35	27	24	22	101516.4
		101517.1	101517	12	3/8	26	18,5	30	16,5	12	35	27	24	24	101517.4
		101518.1	101518	14	1/2	31	23	37,5	21,5	14	41	32	30	27	101518.4
	400	101519.1	101519	16	1/2	31	22,5	37,5	21,5	14	41	32	30	30	101519.4
		101520.1	101520	20	3/4	36	25,5	44	24	16	47	41	36	36	101520.4
		101521.1	101521	25	1	42,5	31,5	55,5	30,5	18	54,5	50	46	46	101521.4
		101522.1	101522	30	1 1/4	49,5	36	65,5	35,5	20	62,5	60	55	50	101522.4
	315	101523.1	101523	38	1 1/2	56,5	40,5	75,5	40,5	22	71,5	70	60	60	101523.4

Note: If you wish to order a fitting in stainless steel, please change the first two digit from **10..** to **11..**
Articles not included in ISO 8434-1 norm available on scheduled orders only

Serie	Bar	Ordering Body	Ordering Equipped B3	Ø Tube	M	L1	L2	L3	L4	L5	L6	CH1	CH2	CH3	Ordering Equipped B4
L	315	101604.1	101604	6	10x1	19	12	18,5	10,5	8	26	17	17	14	101604.4
		101605.1	101605	8	12x1,5	21,5	14,5	25	14	12	29,5	22	19	17	101605.4
		101606.1	101606	10	14x1,5	22,5	15,5	25	14	12	30,5	22	19	19	101606.4
		101607.1	101607	12	16x1,5	25	18	30	16,5	12	33	27	24	22	101607.4
		101608.1	101608	15	18x1,5	29	22	33,5	18,5	12	37	32	27	27	101608.4
		101609.1	101609	18	22x1,5	29	21,5	37,5	21,5	14	38	32	30	32	101609.4
	160	101610.1	101610	22	26x1,5	34	26,5	44	24	16	43	41	36	36	101610.4
		101611.1	101611	28	33x2	38,5	31	55,5	30,5	18	47,5	50	46	41	101611.4
		101612.1	101612	35	42x2	45,5	35	65,5	35,5	20	56,5	60	55	50	101612.4
		101613.1	101613	42	48x2	50,5	39,5	75,5	40,5	22	62,5	70	60	60	101613.4
S	630	101614.1	101614	6	12x1,5	23,5	16,5	25	14	12	31,5	22	19	17	101614.4
		101615.1	101615	8	14x1,5	23,5	16,5	25	14	12	31,5	22	19	19	101615.4
		101616.1	101616	10	16x1,5	26	18,5	30	16,5	12	35	27	24	22	101616.4
		101617.1	101617	12	18x1,5	29	21,5	33,5	18,5	12	38	32	27	24	101617.4
		101618.1	101618	14	20x1,5	31	23	36	20	14	41	32	30	27	101618.4
	400	101619.1	101619	16	22x1,5	31	22,5	37,5	21,5	14	41	32	30	30	101619.4
		101620.1	101620	20	27x2	36	25,5	44	24	16	47	41	36	36	101620.4
		101621.1	101621	25	33x2	42,5	31,5	55,5	30,5	18	54,5	50	46	46	101621.4
		101622.1	101622	30	42x2	49,5	36	65,5	35,5	20	62,5	60	55	50	101622.4
	315	101623.1	101623	38	48x2	56,5	40,5	75,5	40,5	22	71,5	70	60	60	101623.4

Note: If you wish to order a fitting in stainless steel, please change the first two digit from **10..** to **11..**
Articles not included in ISO 8434-1 norm available on scheduled orders only

MALE STUD COUPLING Thread BSP Taper

Type: **1017...1** Only Body

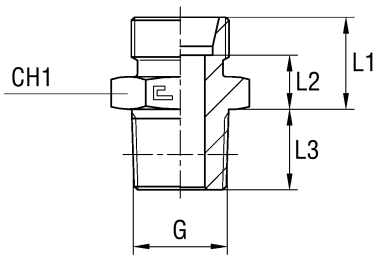

Type: **1017..** B3 Ring

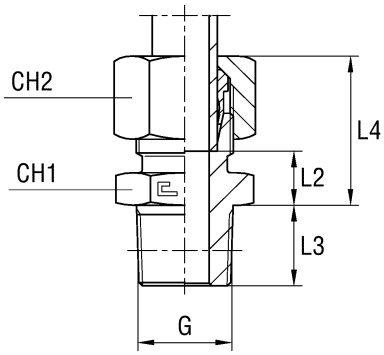

Type: **1017...4** B4 Ring

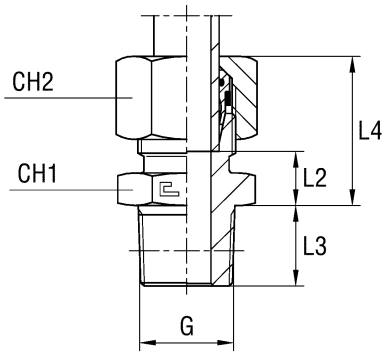

Serie	Bar	Ordering Body	Ordering Equipped B3	Ø Tube	G	L1	L2	L3	L4	CH1	CH2	Ordering Equipped B4
LL	100	101701.1	101701	4	1/8	12	8	8	18,5	12	10	-
		101702.1	101702	6	1/8	12	6,5	8	18,5	12	12	-
		101703.1	101703	8	1/8	14	8,5	8	20,5	12	14	-
L	315	101704.1	101704	6	1/8	14	7	8	22	12	14	101704.4
		101705.1	101705	8	1/4	15	8	12	23	17	17	101705.4
		101706.1	101706	10	1/4	16	9	12	24	17	19	101706.4
		101707.1	101707	12	3/8	17	10	12	24,5	19	22	101707.4
		101708.1	101708	15	1/2	18	11	14	26	24	27	101708.4
		101709.1	101709	18	1/2	19	11,5	14	28	27	32	101709.4
	160	101710.1	101710	22	3/4	21	13,5	16	30	32	36	101710.4
		101711.1	101711	28	1	22	14,5	18	31	41	41	101711.4
		101712.1	101712	35	1 1/4	25	14,5	20	36	46	50	101712.4
		101713.1	101713	42	1 1/2	27	16	22	39	55	60	101713.4
S	630	101714.1	101714	6	1/4	18	11	12	26	17	17	101714.4
		101715.1	101715	8	1/4	20	13	12	28	17	19	101715.4
		101716.1	101716	10	3/8	20	12,5	12	28,5	19	22	101716.4
		101717.1	101717	12	3/8	22	14,5	12	30,5	22	24	101717.4
		101718.1	101718	14	1/2	24	16	14	34	24	27	101718.4
	400	101719.1	101719	16	1/2	24	15,5	14	34	27	30	101719.4
		101720.1	101720	20	3/4	28	17,5	16	39	32	36	101720.4
		101721.1	101721	25	1	32	20	18	44	41	46	101721.4
		101722.1	101722	30	1 1/4	34	20,5	20	47	46	50	101722.4
	315	101723.1	101723	38	1 1/2	39	23	22	54	55	60	101723.4
L	315	101724.1	101724	6	1/4	15	8	12	22,5	14	14	101724.4
		101725.1	101725	8	1/8	15	8	8	22	14	17	101725.4
		101726.1	101726	8	3/8	16	9	12	25	19	17	101726.4
		101727.1	101727	8	1/2	16	9	14	25	22	17	101727.4
		101728.1	101728	10	1/8	16	9	8	24	17	19	101728.4
		101729.1	101729	10	3/8	17	10	12	25	19	19	101729.4
		101730.1	101730	10	1/2	17	10	14	25	22	19	101730.4
		101731.1	101731	12	1/4	17	10	12	24,5	19	22	101731.4
		101732.1	101732	12	1/2	17	10	14	24,5	22	22	101732.4
		101733.1	101733	15	3/8	18	11	12	26	24	27	101733.4
		101734.1	101734	18	3/4	19	11,5	16	28	32	32	101734.4
S	630	101735.1	101735	12	1/2	22	14,5	14	30,5	22	24	101735.4
		101736.1	101736	14	3/8	24	16	12	34	24	27	101736.4
	400	101737.1	101737	16	3/8	24	15,5	12	34	27	30	101737.4
		101738.1	101738	20	1/2	28	17,5	14	39	32	36	101738.4
		101739.1	101739	25	3/4	32	20	16	44	41	46	101739.4
		101740.1	101740	30	1	34	20,5	18	47	46	50	101740.4

Note: If you wish to order a fitting in stainless steel, please change the first two digit from **10..** to **11..**
Articles not included in ISO 8434-1 norm

MALE STUD COUPLING Thread NPT

Type: **1018...1** Only Body

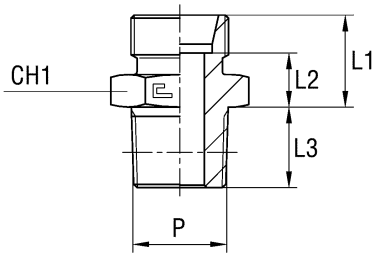

Type: **1018..** B3 Ring

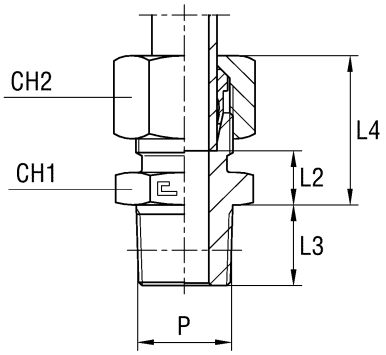

Type: **1018...4** B4 Ring

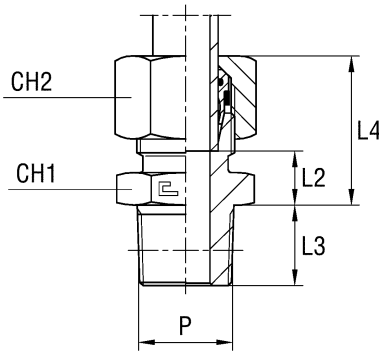

Serie	Bar	Ordering Body	Ordering Equipped B3	Ø Tube	P	L1	L2	L3	L4	CH1	CH2	Ordering Equipped B4
L	315	101804.1	101804	6	1/8	14	7	10	22	12	14	101804.4
		101805.1	101805	8	1/4	15	8	15	23	17	17	101805.4
		101806.1	101806	10	1/4	16	9	15	24	17	19	101806.4
		101807.1	101807	12	3/8	17	10	15	24,5	19	22	101807.4
		101808.1	101808	15	1/2	18,5	11,5	19,5	26,5	24	27	101808.4
		101809.1	101809	18	1/2	19,5	12	19,5	28,5	27	32	101809.4
	160	101810.1	101810	22	3/4	21	13,5	20	30	32	36	101810.4
		101811.1	101811	28	1	22	14,5	25	31	41	41	101811.4
		101812.1	101812	35	1 1/4	25,5	15	25,5	36,5	46	50	101812.4
		101813.1	101813	42	1 1/2	27	16	26	39	55	60	101813.4
S	630	101814.1	101814	6	1/4	18	11	15	26	17	17	101814.4
		101815.1	101815	8	1/4	20	13	15	28	17	19	101815.4
		101816.1	101816	10	3/8	20	12,5	15	28,5	19	22	101816.4
		101817.1	101817	12	3/8	22	14,5	15	30,5	22	24	101817.4
		101818.1	101818	14	1/2	24,5	16,5	19,5	34,5	24	27	101818.4
	400	101819.1	101819	16	1/2	24,5	16	19,5	34,5	27	30	101819.4
		101820.1	101820	20	3/4	28	17,5	20	39	32	36	101820.4
		101821.1	101821	25	1	32	20	25	44	41	46	101821.4
		101822.1	101822	30	1 1/4	34,5	21	25,5	47,5	46	50	101822.4
	315	101823.1	101823	38	1 1/2	39	23	26	54	55	60	101823.4
L	315	101824.1	101824	6	1/4	15	8	15	22,5	14	14	101824.4
		101825.1	101825	8	1/8	15	8	10	23	17	17	101825.4
		101826.1	101826	8	3/8	16	9	15	24	19	17	101826.4
		101827.1	101827	8	1/2	16,5	9,5	19,5	24,5	22	17	101827.4
		101828.1	101828	10	1/8	16	9	10	24	17	19	101828.4
		101829.1	101829	10	3/8	17	10	15	25	19	19	101829.4
		101830.1	101830	10	1/2	17,5	10,5	19,5	25,5	22	19	101830.4
		101831.1	101831	12	1/4	17	10	15	24,5	19	22	101831.4
		101832.1	101832	12	1/2	17,5	10,5	19,5	25	22	22	101832.4
		101833.1	101833	15	3/8	18	11	15	26	24	27	101833.4
		101834.1	101834	18	3/4	19	11,5	20	28	32	32	101834.4
S	630	101835.1	101835	12	1/2	22,5	15	19,5	31	22	24	101835.4
		101836.1	101836	14	3/8	24	16	15	34	24	27	101836.4
	400	101837.1	101837	16	3/8	24	15,5	15	34	27	30	101837.4
		101838.1	101838	20	1/2	28,5	18	19,5	39,5	32	36	101838.4
		101839.1	101839	25	3/4	32	20	20	44	41	46	101839.4
		101840.1	101840	30	1	34	20,5	25	47	46	50	101840.4

Note: If you wish to order a fitting in stainless steel, please change the first two digit from **10..** to **11..**
Articles not included in ISO 8434-1 norm

MALE STUD COUPLING Thread Metric Taper

Type: **1019…1** Only Body

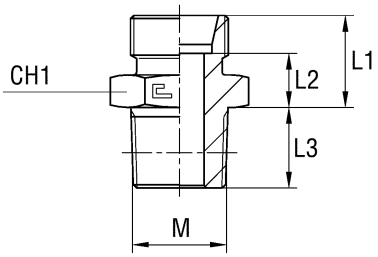

Type: **1019..** B3 Ring

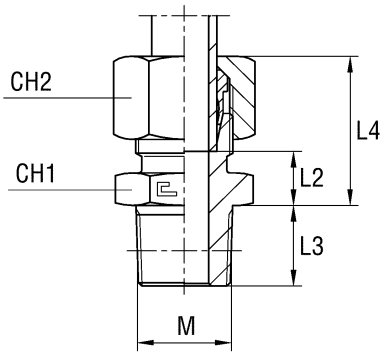

Type: **1019…4** B4 Ring

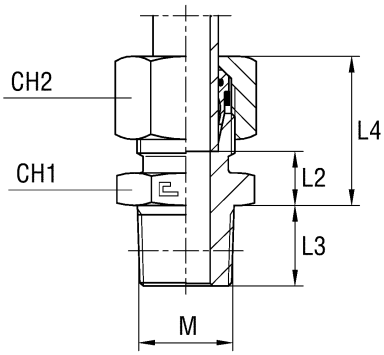

Serie	Bar	Ordering Body	Ordering Equipped B3	Ø Tube	M	L1	L2	L3	L4	CH1	CH2	Ordering Equipped B4
L	315	101904.1	101904	6	10x1	14	7	8	22	12	14	101904.4
		101905.1	101905	8	12x1,5	15	8	12	23	17	17	101905.4
		101906.1	101906	10	14x1,5	16	9	12	24	17	19	101906.4
		101907.1	101907	12	16x1,5	17	10	12	24,5	19	22	101907.4
		101908.1	101908	15	18x1,5	18	11	12	26	24	27	101908.4
		101909.1	101909	18	22x1,5	19	11,5	14	28	27	32	101909.4
S	630	101914.1	101914	6	12x1,5	18	11	12	26	17	17	101914.4
		101915.1	101915	8	14x1,5	20	13	12	28	17	19	101915.4
		101916.1	101916	10	16x1,5	20	12,5	12	28,5	19	22	101916.4
		101917.1	101917	12	18x1,5	22	14,5	12	30,5	22	24	101917.4
		101918.1	101918	14	20x1,5	24	16	14	34	24	27	101918.4
	400	101919.1	101919	16	22x1,5	24	15,5	14	34	27	30	101919.4

Note: If you wish to order a fitting in stainless steel, please change the first two digit from **10..** to **11..**
Articles not included in ISO 8434-1 norm available on request only

MALE STUD ELBOW Thread BSP Taper

Type: **1020…1** Only Body

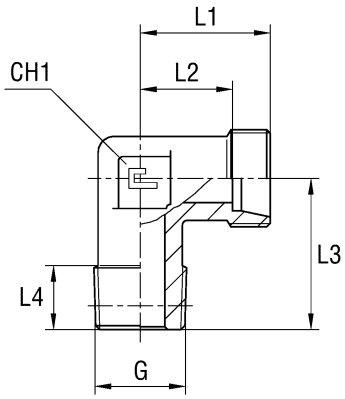

Type: **1020..** B3 Ring

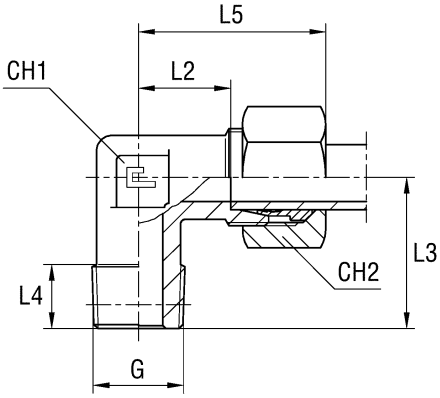

Type: **1020…4** B4 Ring

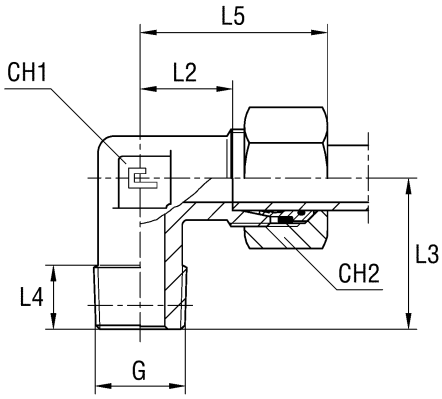

Serie	Bar	Ordering Body	Ordering Equipped B3	Ø Tube	G	L1	L2	L3	L4	L5	CH1	CH2	Ordering Equipped B4
LL	100	102001.1	102001	4	1/8	15	11	17	8	21	9	10	-
		102002.1	102002	6	1/8	15	9,5	17	8	21	9	12	-
		102003.1	102003	8	1/8	17	11,5	20	8	23	12	14	-
L	315	102004.1	102004	6	1/8	19	12	20	8	27	12	14	102004.4
		102005.1	102005	8	1/4	21	14	26	12	29	12	17	102005.4
		102006.1	102006	10	1/4	22	15	27	12	30	14	19	102006.4
		102007.1	102007	12	3/8	24	17	28	12	32	17	22	102007.4
		102008.1	102008	15	1/2	28	21	34	14	36	19	27	102008.4
		102009.1	102009	18	1/2	31	23,5	36	14	40	24	32	102009.4
	160	102010.1	102010	22	3/4	35	27,5	42	16	44	27	36	102010.4
		102011.1	102011	28	1	38	30,5	48	18	47	36	41	102011.4
		102012.1	102012	35	1 1/4	45	34,5	54	20	56	41	50	102012.4
		102013.1	102013	42	1 1/2	51	40	61	22	63	50	60	102013.4
S	630	102014.1	102014	6	1/4	23	16	26	12	31	12	17	102014.4
		102015.1	102015	8	1/4	24	17	27	12	32	14	19	102015.4
		102016.1	102016	10	3/8	25	17,5	28	12	34	17	22	102016.4
		102017.1	102017	12	3/8	29	21,5	28	12	38	17	24	102017.4
		102018.1	102018	14	1/2	30	22	32	14	40	19	27	102018.4
	400	102019.1	102019	16	1/2	33	24,5	32	14	43	24	30	102019.4
		102020.1	102020	20	3/4	37	26,5	42	16	48	27	36	102020.4
		102021.1	102021	25	1	42	30	48	18	54	36	46	102021.4
		102022.1	102022	30	1 1/4	49	35,5	54	20	62	41	50	102022.4
	315	102023.1	102023	38	1 1/2	57	41	61	22	72	50	60	102023.4
L	315	102024.1	102024	6	1/4	21	14	26	12	29	12	14	102024.4
		102025.1	102025	8	1/8	21	14	22	8	29	12	17	102025.4
		102026.1	102026	8	3/8	23	16	28	12	31	17	17	102026.4
		102027.1	102027	8	1/2	26	19	34	14	34	19	17	102027.4
		102028.1	102028	10	1/8	22	15	22	8	30	14	19	102028.4
		102029.1	102029	10	3/8	24	17	28	12	32	17	19	102029.4
		102030.1	102030	10	1/2	27	20	34	14	35	19	19	102030.4
		102031.1	102031	12	1/4	24	17	28	12	32	17	22	102031.4
		102032.1	102032	12	1/2	27	20	34	14	34	19	22	102032.4
		102033.1	102033	15	3/8	28	21	30	12	36	19	27	102033.4
		102034.1	102034	18	3/4	34	26,5	42	16	43	27	32	102034.4
S	630	102035.1	102035	12	1/2	28	20,5	32	14	37	19	24	102035.4
		102036.1	102036	14	3/8	30	22	30	12	40	19	27	102036.4
	400	102037.1	102037	16	3/8	33	24,5	37	12	43	24	30	102037.4
		102038.1	102038	20	1/2	37	26,5	36	14	48	27	36	102038.4
		102039.1	102039	25	3/4	42	30	42	16	54	36	46	102039.4
		102040.1	102040	30	1	49	35,5	48	18	62	41	50	102040.4

Note: If you wish to order a fitting in stainless steel, please change the first two digit from **10..** to **11..**
Articles not included in ISO 8434-1 norm

MALE STUD ELBOW Thread NPT

Type: **1021…1** Only Body

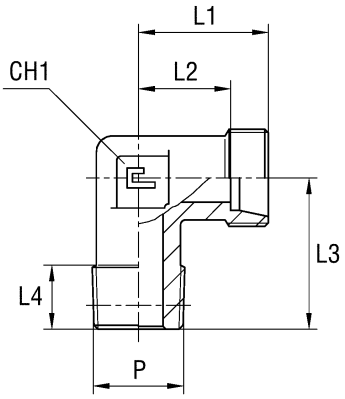

Type: **1021..** B3 Ring

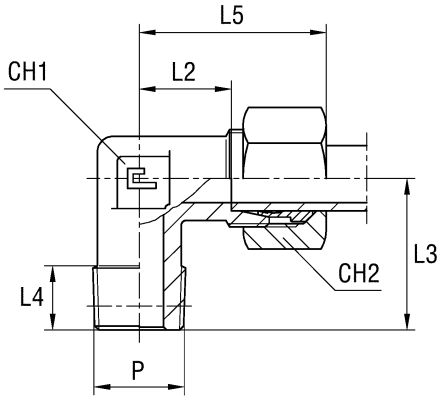

Type: **1021…4** B4 Ring

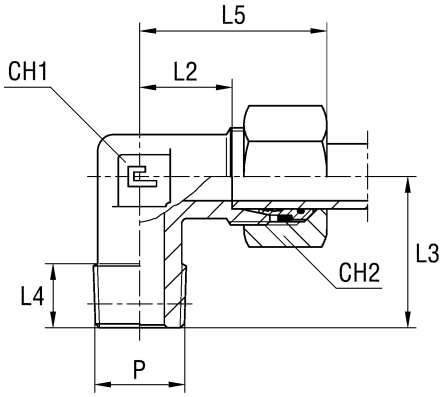

Serie	Bar	Ordering Body	Ordering Equipped B3	Ø Tube	P	L1	L2	L3	L4	L5	CH1	CH2	Ordering Equipped B4
L	315	102104.1	102104	6	1/8	19	12	20	10	27	12	14	102104.4
		102105.1	102105	8	1/4	21	14	26	15	29	12	17	102105.4
		102106.1	102106	10	1/4	22	15	27	15	30	14	19	102106.4
		102107.1	102107	12	3/8	24	17	28	15	32	17	22	102107.4
		102108.1	102108	15	1/2	28	21	34	19,5	36	19	27	102108.4
		102109.1	102109	18	1/2	31	23,5	36	19,5	40	24	32	102109.4
	160	102110.1	102110	22	3/4	35	27,5	42	20	44	27	36	102110.4
		102111.1	102111	28	1	38	30,5	48	25	47	36	41	102111.4
		102112.1	102112	35	1 1/4	45	34,5	57	25,5	56	41	50	102112.4
		102113.1	102113	42	1 1/2	51	40	61	26	63	50	60	102113.4
S	630	102114.1	102114	6	1/4	23	16	26	15	31	12	17	102114.4
		102115.1	102115	8	1/4	24	17	27	15	32	14	19	102115.4
		102116.1	102116	10	3/8	25	17,5	28	15	34	17	22	102116.4
		102117.1	102117	12	3/8	29	21,5	28	15	38	17	24	102117.4
		102118.1	102118	14	1/2	30	22	34	19,5	40	19	27	102118.4
	400	102119.1	102119	16	1/2	33	24,5	36	19,5	43	24	30	102119.4
		102120.1	102120	20	3/4	37	26,5	42	20	48	27	36	102120.4
		102121.1	102121	25	1	42	30	48	25	54	36	46	102121.4
		102122.1	102122	30	1 1/4	49	35,5	57	25,5	62	41	50	102122.4
	315	102123.1	102123	38	1 1/2	57	41	61	26	72	50	60	102123.4
L	315	102124.1	102124	6	1/4	21	14	26	15	29	12	14	102124.4
		102125.1	102125	8	1/8	21	14	24	10	29	12	17	102125.4
		102126.1	102126	8	3/8	23	16	28	15	31	17	17	102126.4
		102127.1	102127	8	1/2	26	19	34	19,5	34	19	17	102127.4
		102128.1	102128	10	1/8	22	15	24	10	30	14	19	102128.4
		102129.1	102129	10	3/8	24	17	28	15	32	17	19	102129.4
		102130.1	102130	10	1/2	27	20	34	19,5	35	19	19	102130.4
		102131.1	102131	12	1/4	24	17	28	15	32	17	22	102131.4
		102132.1	102132	12	1/2	27	20	34	19,5	35	19	22	102132.4
		102133.1	102133	15	3/8	28	21	33	15	36	19	27	102133.4
		102134.1	102134	18	3/4	34	26,5	42	20	43	27	32	102134.4
S	630	102135.1	102135	12	1/2	28	20,5	34	19,5	37	19	24	102135.4
		102136.1	102136	14	3/8	30	22	33	15	40	19	27	102136.4
	400	102137.1	102137	16	3/8	33	24,5	37	15	43	24	30	102137.4
		102138.1	102138	20	1/2	37	26,5	42	19,5	48	27	36	102138.4
		102139.1	102139	25	3/4	42	30	46	20	54	36	46	102139.4
		102140.1	102140	30	1	49	35,5	55	25	62	41	50	102140.4

Note: If you wish to order a fitting in stainless steel, please change the first two digit from **10..** to **11..**
Articles not included in ISO 8434-1 norm

MALE STUD ELBOW Thread Metric Taper

Type: **1022…1** Only Body

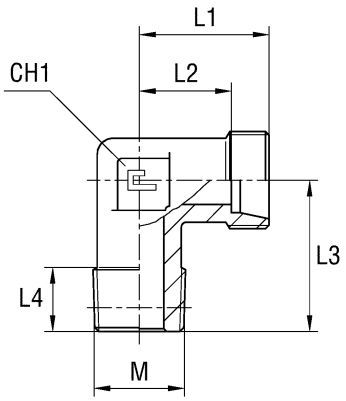

Type: **1022..** B3 Ring

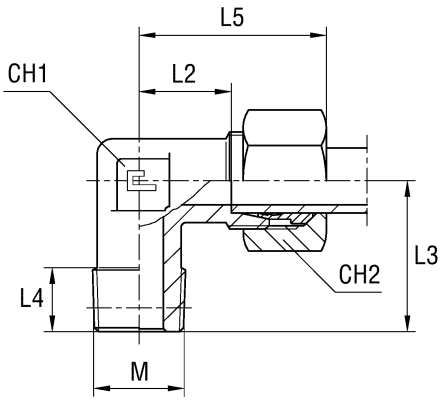

Type: **1022…4** B4 Ring

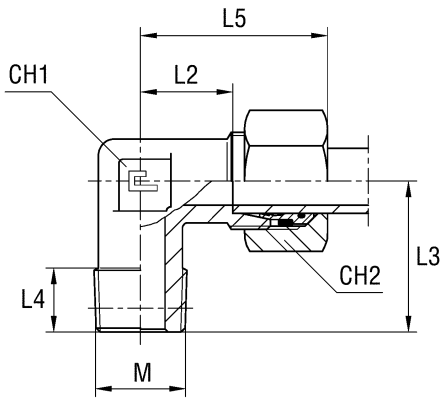

Serie	Bar	Ordering Body	Ordering Equipped B3	Ø Tube	M	L1	L2	L3	L4	L5	CH1	CH2	Ordering Equipped B4
L	315	102204.1	102204	6	10x1	19	12	20	8	27	12	14	102204.4
		102205.1	102205	8	12x1,5	21	14	26	12	29	12	17	102205.4
		102206.1	102206	10	14x1,5	22	15	27	12	30	14	19	102206.4
		102207.1	102207	12	16x1,5	24	17	28	12	32	17	22	102207.4
		102208.1	102208	15	18x1,5	28	21	32	12	36	19	27	102208.4
		102209.1	102209	18	22x1,5	31	23,5	36	14	40	24	32	102209.4
S	630	102214.1	102214	6	12x1,5	23	16	26	12	31	12	17	102214.4
		102215.1	102215	8	14x1,5	24	17	27	12	32	14	19	102215.4
		102216.1	102216	10	16x1,5	25	17,5	28	12	34	17	22	102216.4
		102217.1	102217	12	18x1,5	29	21,5	28	12	38	17	24	102217.4
		102218.1	102218	14	20x1,5	30	22	32	14	40	19	27	102218.4
	400	102219.1	102219	16	22x1,5	33	24,5	32	14	43	24	30	102219.4

Note: If you wish to order a fitting in stainless steel, please change the first two digit from **10..** to **11..**
Articles not included in ISO 8434-1 norm available on request only

MALE STUD ELBOW Thread BSP Parallel - Thread Metric Parallel

Type: **1023...1** Only Body
Type: **1024...1** Only Body

Type: **1023..** B3 Ring
Type: **1024..** B3 Ring

Type: **1023...4** B4 Ring
Type: **1024...4** B4 Ring

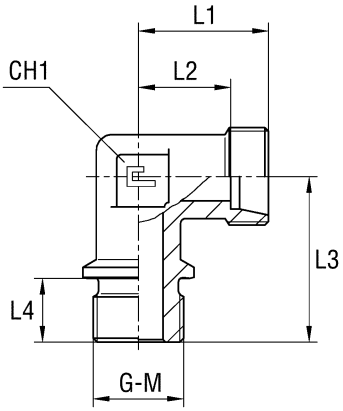

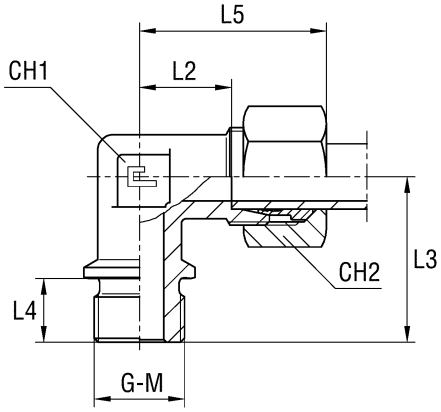

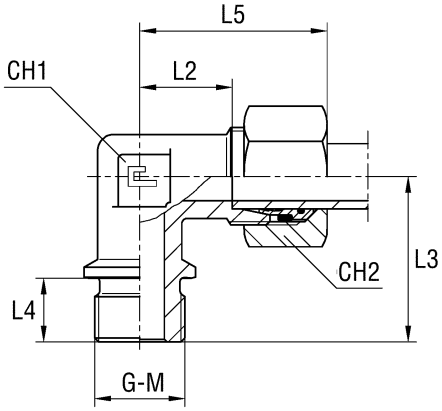

Serie	Bar	Ordering Body	Ordering Equipped B3	Ø Tube	G	L1	L2	L3	L4	L5	CH1	CH2	Ordering Equipped B4
L	160	102310.1	102310	22	3/4	35	27,5	43,5	15	44	27	36	102310.4
		102311.1	102311	28	1	38	30,5	49	17	47	36	41	102311.4
		102312.1	102312	35	1 1/4	45	34,5	57	19	56	41	50	102312.4
		102313.1	102313	42	1 1/2	51	40	64	20	63	50	60	102313.4
S	400	102320.1	102320	20	3/4	37	26,5	43,5	15	48	27	36	102320.4
		102321.1	102321	25	1	42	30	49	17	54	36	46	102321.4
		102322.1	102322	30	1 1/4	49	35,5	57	19	62	41	50	102322.4
	315	102323.1	102323	38	1 1/2	57	41	64	20	72	50	60	102323.4

Note: If you wish to order a fitting in stainless steel, please change the first two digit from **10..** to **11..**
Articles not included in ISO 8434-1 norm available on request only

Serie	Bar	Ordering Body	Ordering Equipped B3	Ø Tube	M	L1	L2	L3	L4	L5	CH1	CH2	Ordering Equipped B4
L	160	102410.1	102410	22	26x1,5	35	27,5	43,5	15	44	27	36	102410.4
		102411.1	102411	28	33x2	38	30,5	49	17	47	36	41	102411.4
		102412.1	102412	35	42x2	45	34,5	57	19	56	41	50	102412.4
		102413.1	102413	42	48x2	51	40	64	20	63	50	60	102413.4
S	400	102420.1	102420	20	27x2	37	26,5	43,5	15	48	27	36	102420.4
		102421.1	102421	25	33x2	42	30	49	17	54	36	46	102421.4
		102422.1	102422	30	42x2	49	35,5	57	19	62	41	50	102422.4
	315	102423.1	102423	38	48x2	57	41	64	20	72	50	60	102423.4

Note: If you wish to order a fitting in stainless steel, please change the first two digit from **10..** to **11..**
Articles not included in ISO 8434-1 norm available on request only

MALE STUD BRANCH TEE Thread BSP Taper - Thread NPT

Type: **1025...1** Only Body
Type: **1026...1** Only Body

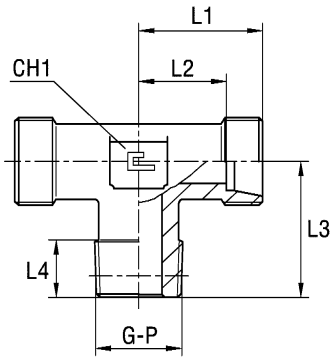

Type: **1025..** B3 Ring
Type: **1026..** B3 Ring

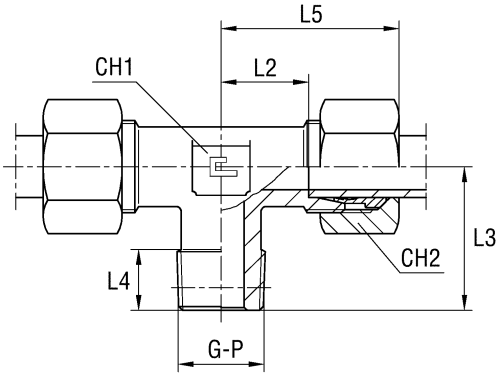

Type: **1025...4** B4 Ring
Type: **1026...4** B4 Ring

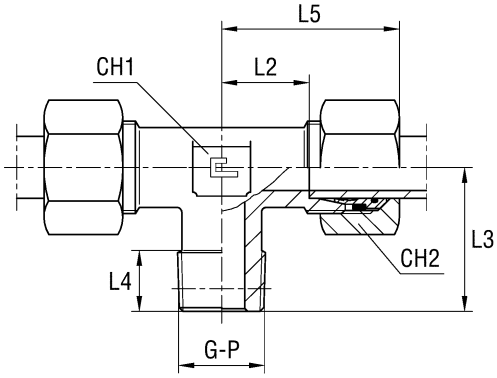

Serie	Bar	Ordering Body	Ordering Equipped B3	Ø Tube	G	L1	L2	L3	L4	L5	CH1	CH2	Ordering Equipped B4
LL	100	102501.1	102501	4	1/8	15	11	17	8	21	9	10	-
		102502.1	102502	6	1/8	15	9,5	17	8	21	9	12	-
		102503.1	102503	8	1/8	17	11,5	20	8	23	12	14	-
L	315	102504.1	102504	6	1/8	19	12	20	8	27	12	14	102504.4
		102505.1	102505	8	1/4	21	14	26	12	29	12	17	102505.4
		102506.1	102506	10	1/4	22	15	27	12	30	14	19	102506.4
		102507.1	102507	12	3/8	24	17	28	12	32	17	22	102507.4
		102508.1	102508	15	1/2	28	21	34	14	36	19	27	102508.4
		102509.1	102509	18	1/2	31	23,5	36	14	40	24	32	102509.4
	160	102510.1	102510	22	3/4	35	27,5	42	16	44	27	36	102510.4
		102511.1	102511	28	1	38	30,5	48	18	47	36	41	102511.4
		102512.1	102512	35	1 1/4	45	34,5	54	20	56	41	50	102512.4
		102513.1	102513	42	1 1/2	51	40	61	22	63	50	60	102513.4
S	630	102514.1	102514	6	1/4	23	16	26	12	31	12	17	102514.4
		102515.1	102515	8	1/4	24	17	27	12	32	14	19	102515.4
		102516.1	102516	10	3/8	25	17,5	28	12	34	17	22	102516.4
		102517.1	102517	12	3/8	29	21,5	28	12	38	17	24	102517.4
		102518.1	102518	14	1/2	30	22	32	14	40	19	27	102518.4
	400	102519.1	102519	16	1/2	33	24,5	32	14	43	24	30	102519.4
		102520.1	102520	20	3/4	37	26,5	42	16	48	27	36	102520.4
		102521.1	102521	25	1	42	30	48	18	54	36	46	102521.4
		102522.1	102522	30	1 1/4	49	35,5	54	20	62	41	50	102522.4
	315	102523.1	102523	38	1 1/2	57	41	61	22	72	50	60	102523.4

Note: If you wish to order a fitting in stainless steel, please change the first two digit from **10..** to **11..**
Articles not included in ISO 8434-1 norm available on scheduled orders only

Serie	Bar	Ordering Body	Ordering Equipped B3	Ø Tube	P	L1	L2	L3	L4	L5	CH1	CH2	Ordering Equipped B4
L	315	102604.1	102604	6	1/8	19	12	20	10	27	12	14	102604.4
		102605.1	102605	8	1/4	21	14	26	15	29	12	17	102605.4
		102606.1	102606	10	1/4	22	15	27	15	30	14	19	102606.4
		102607.1	102607	12	3/8	24	17	28	15	32	17	22	102607.4
		102608.1	102608	15	1/2	28	21	34	19,5	36	19	27	102608.4
		102609.1	102609	18	1/2	31	23,5	36	19,5	40	24	32	102609.4
	160	102610.1	102610	22	3/4	35	27,5	42	20	44	27	36	102610.4
		102611.1	102611	28	1	38	30,5	48	25	47	36	41	102611.4
		102612.1	102612	35	1 1/4	45	34,5	57	25,5	56	41	50	102612.4
		102613.1	102613	42	1 1/2	51	40	61	26	63	50	60	102613.4
S	630	102614.1	102614	6	1/4	23	16	26	15	31	12	17	102614.4
		102615.1	102615	8	1/4	24	17	27	15	32	14	19	102615.4
		102616.1	102616	10	3/8	25	17,5	28	15	34	17	22	102616.4
		102617.1	102617	12	3/8	29	21,5	28	15	38	17	24	102617.4
		102618.1	102618	14	1/2	30	22	34	19,5	40	19	27	102618.4
	400	102619.1	102619	16	1/2	33	24,5	36	19,5	43	24	30	102619.4
		102620.1	102620	20	3/4	37	26,5	42	20	48	27	36	102620.4
		102621.1	102621	25	1	42	30	48	25	54	36	46	102621.4
		102622.1	102622	30	1 1/4	49	35,5	57	25,5	62	41	50	102622.4
	315	102623.1	102623	38	1 1/2	57	41	61	26	72	50	60	102623.4

Note: If you wish to order a fitting in stainless steel, please change the first two digit from **10..** to **11..**
AArticles not included in ISO 8434-1 norm available on scheduled orders only

MALE STUD BRANCH TEE Thread Metric Taper

Type: **1027…1** Only Body

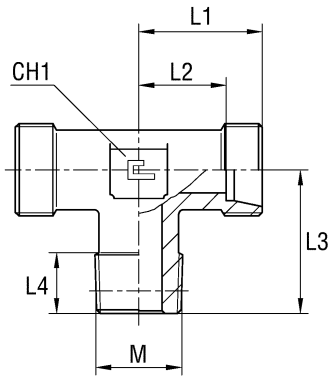

Type: **1027..** B3 Ring

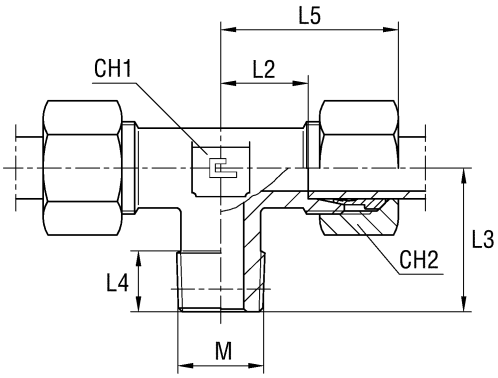

Type: **1027…4** B4 Ring

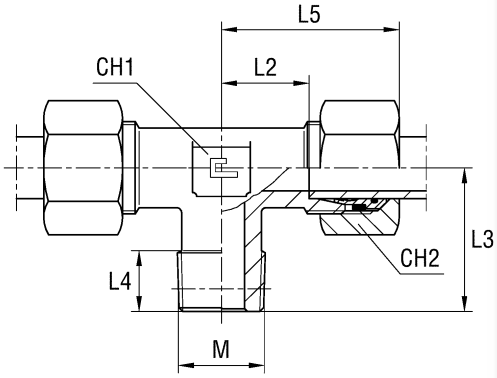

Serie	Bar	Ordering Body	Ordering Equipped B3	Ø Tube	M	L1	L2	L3	L4	L5	CH1	CH2	Ordering Equipped B4
L	315	102704.1	102704	6	10x1	19	12	20	8	27	12	14	102704.4
		102705.1	102705	8	12x1,5	21	14	26	12	29	12	17	102705.4
		102706.1	102706	10	14x1,5	22	15	27	12	30	14	19	102706.4
		102707.1	102707	12	16x1,5	24	17	28	12	32	17	22	102707.4
		102708.1	102708	15	18x1,5	28	21	32	12	36	19	27	102708.4
		102709.1	102709	18	22x1,5	31	23,5	36	14	40	24	32	102709.4
S	630	102714.1	102714	6	12x1,5	23	16	26	12	31	12	17	102714.4
		102715.1	102715	8	14x1,5	24	17	27	12	32	14	19	102715.4
		102716.1	102716	10	16x1,5	25	17,5	28	12	34	17	22	102716.4
		102717.1	102717	12	18x1,5	29	21,5	28	12	38	17	24	102717.4
		102718.1	102718	14	20x1,5	30	22	32	14	40	19	27	102718.4
	400	102719.1	102719	16	22x1,5	33	24,5	32	14	43	24	30	102719.4

Note: If you wish to order a fitting in stainless steel, please change the first two digit from **10..** to **11..**
Articles not included in ISO 8434-1 norm available on request only

MALE STUD BRANCH TEE Thread BSP Parallel - Thread Metric Parallel

Type: **1028...1** Only Body
Type: **1029...1** Only Body

Type: **1028..** B3 Ring
Type: **1029..** B3 Ring

Type: **1028...4** B4 Ring
Type: **1029...4** B4 Ring

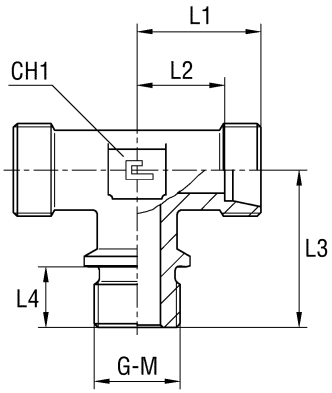

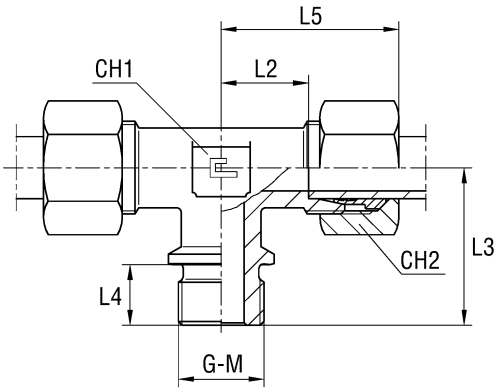

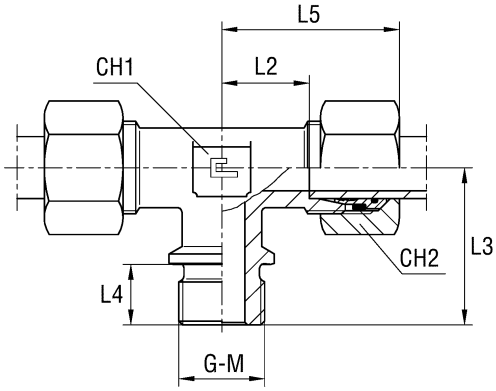

Serie	Bar	Ordering Body	Ordering Equipped B3	Ø Tube	G	L1	L2	L3	L4	L5	CH1	CH2	Ordering Equipped B4
L	160	102810.1	102810	22	3/4	35	27,5	43,5	15	44	27	36	102810.4
		102811.1	102811	28	1	38	30,5	49	17	47	36	41	102811.4
		102812.1	102812	35	1 1/4	45	34,5	57	19	56	41	50	102812.4
		102813.1	102813	42	1 1/2	51	40	64	20	63	50	60	102813.4
S	400	102820.1	102820	20	3/4	37	26,5	43,5	15	48	27	36	102820.4
		102821.1	102821	25	1	42	30	49	17	54	36	46	102821.4
		102822.1	102822	30	1 1/4	49	35,5	57	19	62	41	50	102822.4
	315	102823.1	102823	38	1 1/2	57	41	64	20	72	50	60	102823.4

Note: If you wish to order a fitting in stainless steel, please change the first two digit from **10..** to **11..**
Articles not included in ISO 8434-1 norm available on request only

Serie	Bar	Ordering Body	Ordering Equipped B3	Ø Tube	M	L1	L2	L3	L4	L5	CH1	CH2	Ordering Equipped B4
L	160	102910.1	102910	22	26x1,5	35	27,5	43,5	15	44	27	36	102910.4
		102911.1	102911	28	33x2	38	30,5	49	17	47	36	41	102911.4
		102912.1	102912	35	42x2	45	34,5	57	19	56	41	50	102912.4
		102913.1	102913	42	48x2	51	40	64	20	63	50	60	102913.4
S	400	102920.1	102920	20	27x2	37	26,5	43,5	15	48	27	36	102920.4
		102921.1	102921	25	33x2	42	30	49	17	54	36	46	102921.4
		102922.1	102922	30	42x2	49	35,5	57	19	62	41	50	102922.4
	315	102923.1	102923	38	48x2	57	41	64	20	72	50	60	102923.4

Note: If you wish to order a fitting in stainless steel, please change the first two digit from **10..** to **11..**
Articles not included in ISO 8434-1 norm available on request only

MALE STUD BARREL TEE Thread BSP Taper - Thread NPT

Type: **1030…1** Only Body
Type: **1031…1** Only Body

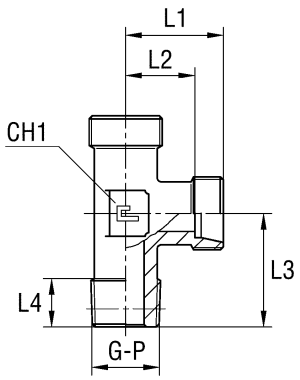

Type: **1030..** B3 Ring
Type: **1031..** B3 Ring

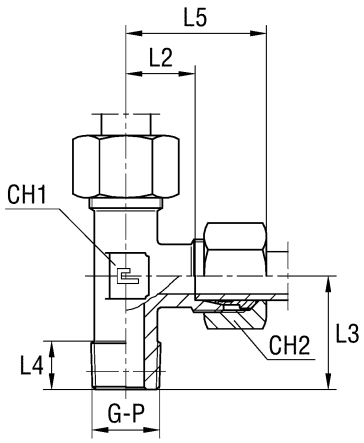

Type: **1030…4** B4 Ring
Type: **1031…4** B4 Ring

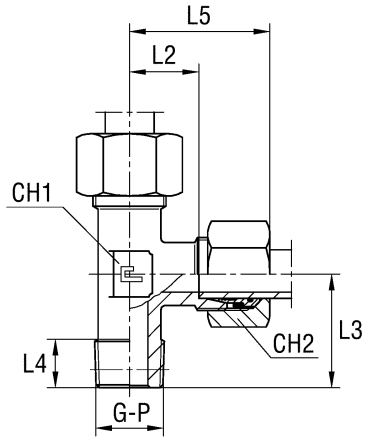

Serie	Bar	Ordering Body	Ordering Equipped B3	Ø Tube	G	L1	L2	L3	L4	L5	CH1	CH2	Ordering Equipped B4
LL	100	103001.1	103001	4	1/8	15	11	17	8	21	9	10	103001.4
		103002.1	103002	6	1/8	15	9,5	17	8	21	9	12	103002.4
		103003.1	103003	8	1/8	17	11,5	20	8	23	12	14	103003.4
L	315	103004.1	103004	6	1/8	19	12	20	8	27	12	14	103004.4
		103005.1	103005	8	1/4	21	14	26	12	29	12	17	103005.4
		103006.1	103006	10	1/4	22	15	27	12	30	14	19	103006.4
		103007.1	103007	12	3/8	24	17	28	12	32	17	22	103007.4
		103008.1	103008	15	1/2	28	21	34	14	36	19	27	103008.4
		103009.1	103009	18	1/2	31	23,5	36	14	40	24	32	103009.4
	160	103010.1	103010	22	3/4	35	27,5	42	16	44	27	36	103010.4
		103011.1	103011	28	1	38	30,5	48	18	47	36	41	103011.4
		103012.1	103012	35	1 1/4	45	34,5	54	20	56	41	50	103012.4
		103013.1	103013	42	1 1/2	51	40	61	22	63	50	60	103013.4
S	630	103014.1	103014	6	1/4	23	16	26	12	31	12	17	103014.4
		103015.1	103015	8	1/4	24	17	27	12	32	14	19	103015.4
		103016.1	103016	10	3/8	25	17,5	28	12	34	17	22	103016.4
		103017.1	103017	12	3/8	29	21,5	28	12	38	17	24	103017.4
		103018.1	103018	14	1/2	30	22	32	14	40	19	27	103018.4
	400	103019.1	103019	16	1/2	33	24,5	32	14	43	24	30	103019.4
		103020.1	103020	20	3/4	37	26,5	42	16	48	27	36	103020.4
		103021.1	103021	25	1	42	30	48	18	54	36	46	103021.4
		103022.1	103022	30	1 1/4	49	35,5	54	20	62	41	50	103022.4
	315	103023.1	103023	38	1 1/2	57	41	61	22	72	50	60	103023.4

Note: If you wish to order a fitting in stainless steel, please change the first two digit from **10..** to **11..**
Articles not included in ISO 8434-1 norm available on scheduled orders only

Serie	Bar	Ordering Body	Ordering Equipped B3	Ø Tube	P	L1	L2	L3	L4	L5	CH1	CH2	Ordering Equipped B4
L	315	103104.1	103104	6	1/8	19	12	20	10	27	12	14	103104.4
		103105.1	103105	8	1/4	21	14	26	15	29	12	17	103105.4
		103106.1	103106	10	1/4	22	15	27	15	30	14	19	103106.4
		103107.1	103107	12	3/8	24	17	28	15	32	17	22	103107.4
		103108.1	103108	15	1/2	28	21	34	19,5	36	19	27	103108.4
		103109.1	103109	18	1/2	31	23,5	36	19,5	40	24	32	103109.4
	160	103110.1	103110	22	3/4	35	27,5	42	20	44	27	36	103110.4
		103111.1	103111	28	1	38	30,5	48	25	47	36	41	103111.4
		103112.1	103112	35	1 1/4	45	34,5	57	25,5	56	41	50	103112.4
		103113.1	103113	42	1 1/2	51	40	61	26	63	50	60	103113.4
S	630	103114.1	103114	6	1/4	23	16	26	15	31	12	17	103114.4
		103115.1	103115	8	1/4	24	17	27	15	32	14	19	103115.4
		103116.1	103116	10	3/8	25	17,5	28	15	34	17	22	103116.4
		103117.1	103117	12	3/8	29	21,5	28	15	38	17	24	103117.4
		103118.1	103118	14	1/2	30	22	34	19,5	40	19	27	103118.4
	400	103119.1	103119	16	1/2	33	24,5	36	19,5	43	24	30	103119.4
		103120.1	103120	20	3/4	37	26,5	42	20	48	27	36	103120.4
		103121.1	103121	25	1	42	30	48	25	54	36	46	103121.4
		103122.1	103122	30	1 1/4	49	35,5	57	25,5	62	41	50	103122.4
	315	103123.1	103123	38	1 1/2	57	41	61	26	72	50	60	103123.4

Note: If you wish to order a fitting in stainless steel, please change the first two digit from **10..** to **11..**
Articles not included in ISO 8434-1 norm available on scheduled orders only

MALE STUD BARREL TEE Thread Metric Taper

Type: **1032…1** Only Body

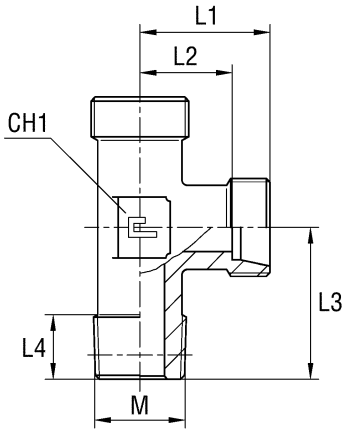

Type: **1032..** B3 Ring

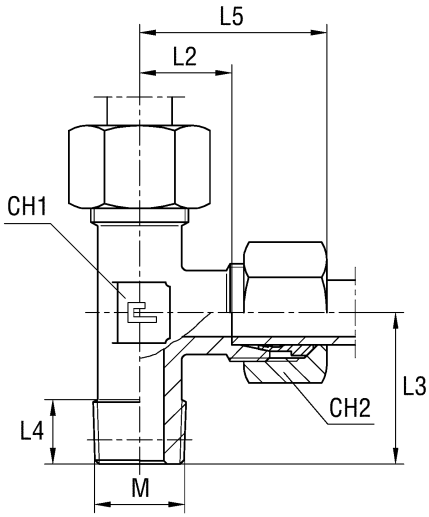

Type: **1032…4** B4 Ring

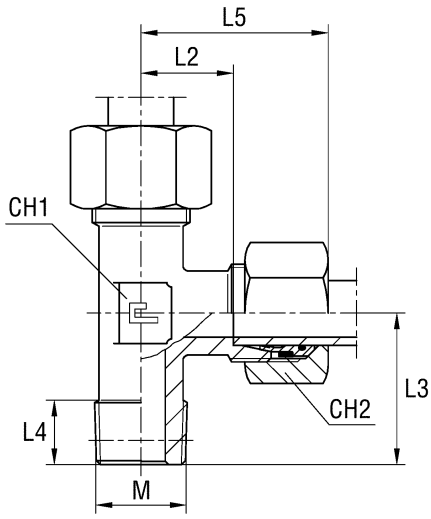

Serie	Bar	Ordering Body	Ordering Equipped B3	Ø Tube	M	L1	L2	L3	L4	L5	CH1	CH2	Ordering Equipped B4
L	315	103204.1	103204	6	10x1	19	12	20	8	27	12	14	103204.4
		103205.1	103205	8	12x1,5	21	14	26	12	29	12	17	103205.4
		103206.1	103206	10	14x1,5	22	15	27	12	30	14	19	103206.4
		103207.1	103207	12	16x1,5	24	17	28	12	32	17	22	103207.4
		103208.1	103208	15	18x1,5	28	21	32	12	36	19	27	103208.4
		103209.1	103209	18	22x1,5	31	23,5	36	14	40	24	32	103209.4
S	630	103214.1	103214	6	12x1,5	23	16	26	12	31	12	17	103214.4
		103215.1	103215	8	14x1,5	24	17	27	12	32	14	19	103215.4
		103216.1	103216	10	16x1,5	25	17,5	28	12	34	17	22	103216.4
		103217.1	103217	12	18x1,5	29	21,5	28	12	38	17	24	103217.4
		103218.1	103218	14	20x1,5	30	22	32	14	40	19	27	103218.4
	400	103219.1	103219	16	22x1,5	33	24,5	32	14	43	24	30	103219.4

Note: If you wish to order a fitting in stainless steel, please change the first two digit from **10..** to **11..**
Articles not included in ISO 8434-1 norm available on request only

MALE STUD BARREL TEE Thread BSP Parallel - Thread Metric Parallel

Type: **1033…1** Only Body
Type: **1034…1** Only Body

Type: **1033..** B3 Ring
Type: **1034..** B3 Ring

Type: **1033…4** B4 Ring
Type: **1034…4** B4 Ring

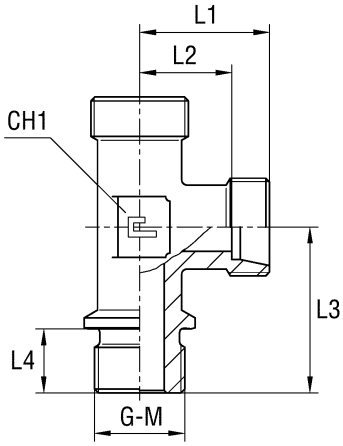

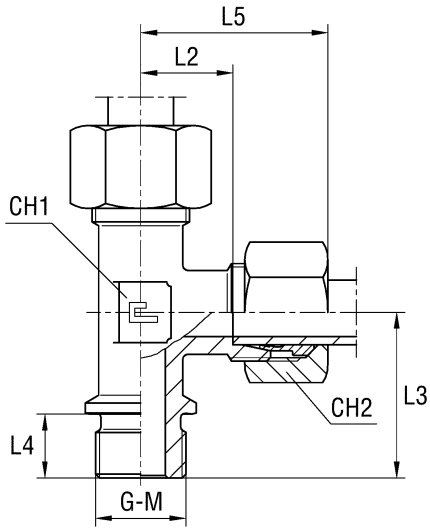

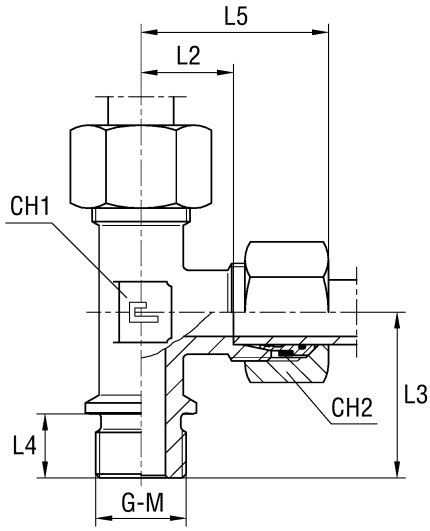

Serie	Bar	Ordering Body	Ordering Equipped B3	Ø Tube	G	L1	L2	L3	L4	L5	CH1	CH2	Ordering Equipped B4
L	160	103310.1	103310	22	3/4	35	27,5	43,5	15	44	27	36	103310.4
		103311.1	103311	28	1	38	30,5	49	17	47	36	41	103311.4
		103312.1	103312	35	1 1/4	45	34,5	57	19	56	41	50	103312.4
		103313.1	103313	42	1 1/2	51	40	64	20	63	50	60	103313.4
S	400	103320.1	103320	20	3/4	37	26,5	43,5	15	48	27	36	103320.4
		103321.1	103321	25	1	42	30	49	17	54	36	46	103321.4
		103322.1	103322	30	1 1/4	49	35,5	57	19	62	41	50	103322.4
	315	103323.1	103323	38	1 1/2	57	41	64	20	72	50	60	103323.4

Note: If you wish to order a fitting in stainless steel, please change the first two digit from **10..** to **11..**
Articles not included in ISO 8434-1 norm available on request only

Serie	Bar	Ordering Body	Ordering Equipped B3	Ø Tube	M	L1	L2	L3	L4	L5	CH1	CH2	Ordering Equipped B4
L	160	103410.1	103410	22	26x1,5	35	27,5	43,5	15	44	27	36	103410.4
		103411.1	103411	28	33x2	38	30,5	49	17	47	36	41	103411.4
		103412.1	103412	35	42x2	45	34,5	57	19	56	41	50	103412.4
		103413.1	103413	42	48x2	51	40	64	20	63	50	60	103413.4
S	400	103420.1	103420	20	27x2	37	26,5	43,5	15	48	27	36	103420.4
		103421.1	103421	25	33x2	42	30	49	17	54	36	46	103421.4
		103422.1	103422	30	42x2	49	35,5	57	19	62	41	50	103422.4
	315	103423.1	103423	38	48x2	57	41	64	20	72	50	60	103423.4

Note: If you wish to order a fitting in stainless steel, please change the first two digit from **10..** to **11..**
Articles not included in ISO 8434-1 norm available on request only

STRAIGHT COUPLING

Type: **1035…1** Only Body

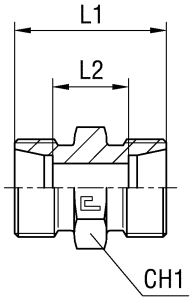

Type: **1035..** B3 Ring

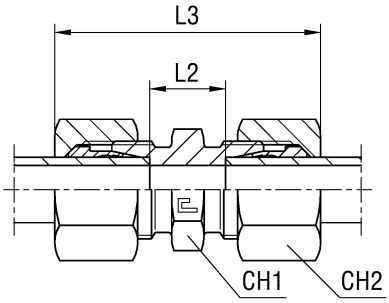

Type: **1035…4** B4 Ring

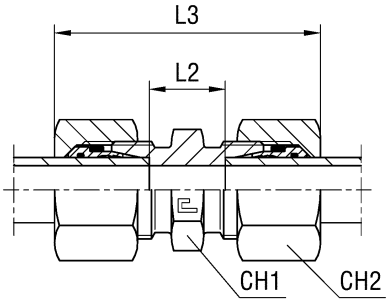

Serie	Bar	Ordering Body	Ordering Equipped B3	Ø Tube	L1	L2	L3	CH1	CH2	Ordering Equipped B4
LL	100	103501.1	103501	4	20	12	31	12	10	-
		103502.1	103502	6	20	9	32	12	12	-
		103503.1	103503	8	23	12	35	12	14	-
L	315	103504.1	103504	6	24	10	39	12	14	103504.4
		103505.1	103505	8	25	11	40	14	17	103505.4
		103506.1	103506	10	27	13	42	17	19	103506.4
		103507.1	103507	12	28	14	43	19	22	103507.4
		103508.1	103508	15	30	16	46	24	27	103508.4
		103509.1	103509	18	31	16	48	27	32	103509.4
	160	103510.1	103510	22	35	20	52	32	36	103510.4
		103511.1	103511	28	36	21	54	41	41	103511.4
		103512.1	103512	35	41	20	63	46	50	103512.4
		103513.1	103513	42	43	21	66	55	60	103513.4
S	630	103514.1	103514	6	30	16	45	14	17	103514.4
		103515.1	103515	8	32	18	47	17	19	103515.4
		103516.1	103516	10	32	17	49	19	22	103516.4
		103517.1	103517	12	34	19	51	22	24	103517.4
		103518.1	103518	14	38	22	57	24	27	103518.4
	400	103519.1	103519	16	38	21	57	27	30	103519.4
		103520.1	103520	20	44	23	66	32	36	103520.4
		103521.1	103521	25	50	26	74	41	46	103521.4
		103522.1	103522	30	54	27	80	46	50	103522.4
	315	103523.1	103523	38	61	29	90	55	60	103523.4

Note: If you wish to order a fitting in stainless steel, please change the first two digit from **10..** to **11..**

BULKHEAD CONNECTION

Type: **1036…1** Only Body

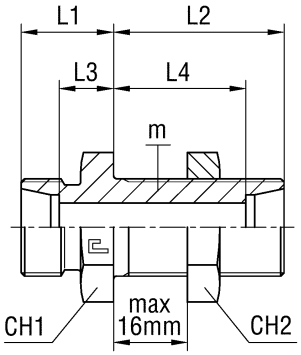

Type: **1036..** B3 Ring

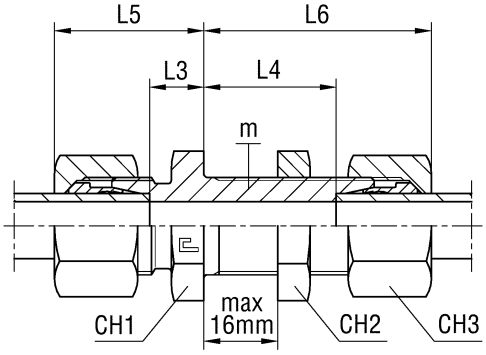

Type: **1036…4** B4 Ring

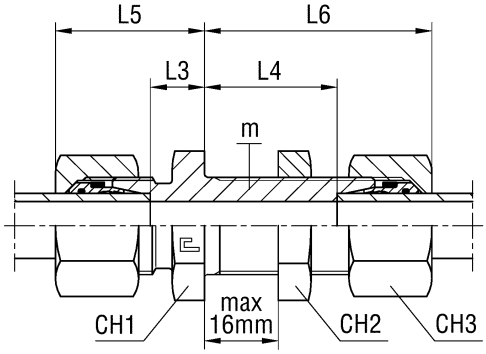

Serie	Bar	Ordering Body	Ordering Equipped B3	Ø Tube	m	L1	L2	L3	L4	L5	L6	CH1	CH2	CH3	Ordering Equipped B4
L	315	103604.1	103604	6	12x1,5	14	34	7	27	22	42	17	17	14	103604.4
		103605.1	103605	8	14x1,5	15	34	8	27	23	42	19	19	17	103605.4
		103606.1	103606	10	16x1,5	17	35	10	28	25	43	22	22	19	103606.4
		103607.1	103607	12	18x1,5	17	36	10	29	25	44	24	24	22	103607.4
		103608.1	103608	15	22x1,5	19	38	12	31	27	46	27	30	27	103608.4
		103609.1	103609	18	26x1,5	21	40	13,5	32,5	30	49	32	36	32	103609.4
	160	103610.1	103610	22	30x2	24	42	16,5	34,5	33	51	36	41	36	103610.4
		103611.1	103611	28	36x2	26	43	18,5	35,5	35	52	41	46	41	103611.4
		103612.1	103612	35	45x2	29	47	18,5	36,5	40	58	50	55	50	103612.4
		103613.1	103613	42	52x2	30	47	19	36	42	59	60	65	60	103613.4
S	630	103614.1	103614	6	14x1,5	19	36	12	29	27	44	19	19	17	103614.4
		103615.1	103615	8	16x1,5	20	36	13	29	28	44	22	22	19	103615.4
		103616.1	103616	10	18x1,5	22	37	14,5	29,5	31	46	24	24	22	103616.4
		103617.1	103617	12	20x1,5	22	38	14,5	30,5	31	47	27	27	24	103617.4
		103618.1	103618	14	22x1,5	25	40	17	32	35	50	30	30	27	103618.4
	400	103619.1	103619	16	24x1,5	25	40	16,5	31,5	35	50	32	32	30	103619.4
		103620.1	103620	20	30x2	28	44	17,5	33,5	39	55	41	41	36	103620.4
		103621.1	103621	25	36x2	32	47	20	35	44	59	46	46	46	103621.4
		103622.1	103622	30	42x2	35	51	21,5	37,5	48	64	50	50	50	103622.4
	315	103623.1	103623	38	52x2	38	53	22	37	53	68	65	65	60	103623.4

Note: If you wish to order a fitting in stainless steel, please change the first two digit from **10..** to **11..**

BULKHEAD ELBOW

Type: **1037…1** Only Body

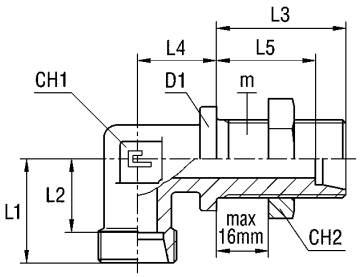

Type: **1037..** B3 Ring

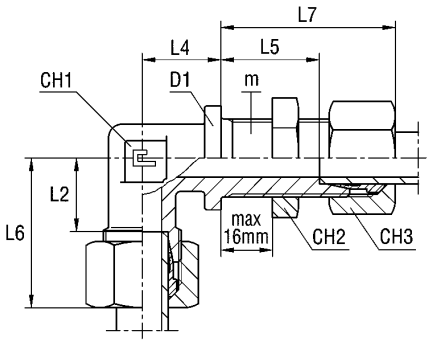

Type: **1037…4** B4 Ring

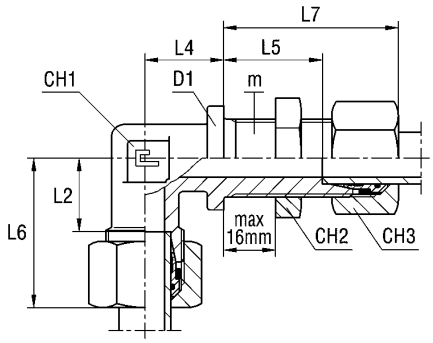

Serie	Bar	Ordering Body	Ordering Equipped B3	Ø Tube	m	L1	L2	L3	L4	L5	L6	L7	D1	CH1	CH2	CH3	Ordering Equipped B4
L	315	103704.1	103704	6	12x1,5	19	12	34	14	27	19	42	17	12	17	14	103704.4
		103705.1	103705	8	14x1,5	21	14	34	17	27	21	42	19	12	19	17	103705.4
		103706.1	103706	10	16x1,5	22	15	35	18	28	22	43	22	14	22	19	103706.4
		103707.1	103707	12	18x1,5	24	17	36	20	29	24	44	24	17	24	22	103707.4
		103708.1	103708	15	22x1,5	28	21	38	23	31	28	46	27	19	30	27	103708.4
		103709.1	103709	18	26x1,5	31	23,5	40	24	32,5	31	49	32	24	36	32	103709.4
	160	103710.1	103710	22	30x2	35	27,5	42	30	34,5	35	51	36	27	41	36	103710.4
		103711.1	103711	28	36x2	38	30,5	43	34	35,5	38	52	42	36	46	41	103711.4
		103712.1	103712	35	45x2	45	34,5	47	39	36,5	45	58	50	41	55	50	103712.4
		103713.1	103713	42	52x2	51	40	47	43	36	51	59	60	50	65	60	103713.4
S	630	103714.1	103714	6	14x1,5	23	16	36	17	29	23	44	19	12	19	17	103714.4
		103715.1	103715	8	16x1,5	24	17	36	18	29	24	44	22	14	22	19	103715.4
		103716.1	103716	10	18x1,5	25	17,5	37	20	29,5	25	46	24	17	24	22	103716.4
		103717.1	103717	12	20x1,5	29	21,5	38	21	30,5	29	47	27	17	27	24	103717.4
		103718.1	103718	14	22x1,5	30	22	40	23	32	30	50	27	19	30	27	103718.4
	400	103719.1	103719	16	24x1,5	33	24,5	40	24	31,5	33	50	30	24	32	30	103719.4
		103720.1	103720	20	30x2	37	26,5	44	30	33,5	37	55	36	27	41	36	103720.4
		103721.1	103721	25	36x2	42	30	47	34	35	42	59	42	36	46	46	103721.4
		103722.1	103722	30	42x2	49	35,5	51	39	37,5	49	64	50	41	50	50	103722.4
	315	103723.1	103723	38	52x2	57	41	53	43	37	57	68	60	50	65	60	103723.4

Note: If you wish to order a fitting in stainless steel, please change the first two digit from **10..** to **11..**

EQUAL ELBOW

Type: **1038…1** Only Body

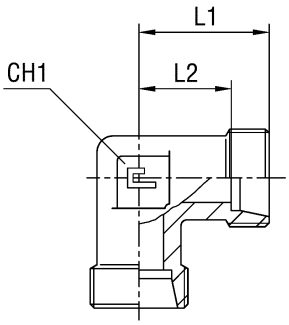

Type: **1038..** B3 Ring

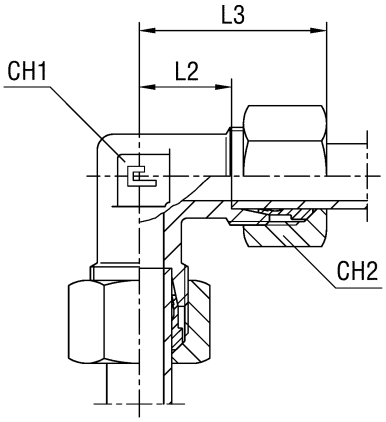

Type: **1038…4** B4 Ring

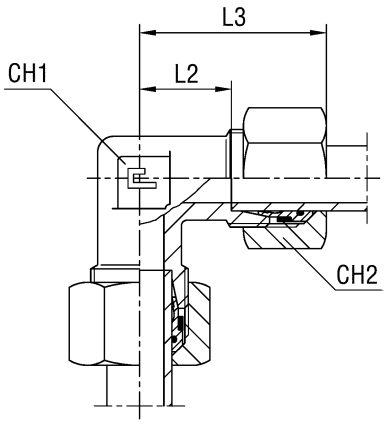

Serie	Bar	Ordering Body	Ordering Equipped B3	Ø Tube	L1	L2	L3	CH1	CH2	Ordering Equipped B4
LL	100	103801.1	103801	4	15	11	21	9	10	-
		103802.1	103802	6	15	9,5	21	9	12	-
		103803.1	103803	8	17	11,5	23	12	14	-
L	315	103804.1	103804	6	19	12	27	12	14	103804.4
		103805.1	103805	8	21	14	29	12	17	103805.4
		103806.1	103806	10	22	15	30	14	19	103806.4
		103807.1	103807	12	24	17	32	17	22	103807.4
		103808.1	103808	15	28	21	36	19	27	103808.4
		103809.1	103809	18	31	23,5	40	24	32	103809.4
	160	103810.1	103810	22	35	27,5	44	27	36	103810.4
		103811.1	103811	28	38	30,5	47	36	41	103811.4
		103812.1	103812	35	45	34,5	56	41	50	103812.4
		103813.1	103813	42	51	40	63	50	60	103813.4
S	630	103814.1	103814	6	23	16	31	12	17	103814.4
		103815.1	103815	8	24	17	32	14	19	103815.4
		103816.1	103816	10	25	17,5	34	17	22	103816.4
		103817.1	103817	12	29	21,5	38	17	24	103817.4
		103818.1	103818	14	30	22	40	19	27	103818.4
	400	103819.1	103819	16	33	24,5	43	24	30	103819.4
		103820.1	103820	20	37	26,5	48	27	36	103820.4
		103821.1	103821	25	42	30	54	36	46	103821.4
		103822.1	103822	30	49	35,5	62	41	50	103822.4
	315	103823.1	103823	38	57	41	72	50	60	103823.4

Note: If you wish to order a fitting in stainless steel, please change the first two digit from **10..** to **11..**

EQUAL TEE

Type: **1039…1** Only Body

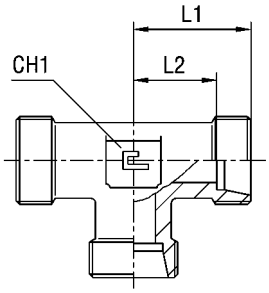

Type: **1039..** B3 Ring

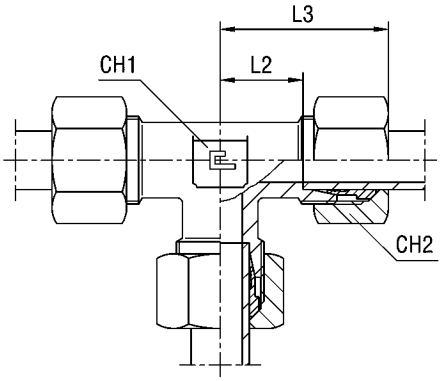

Type: **1039…4** B4 Ring

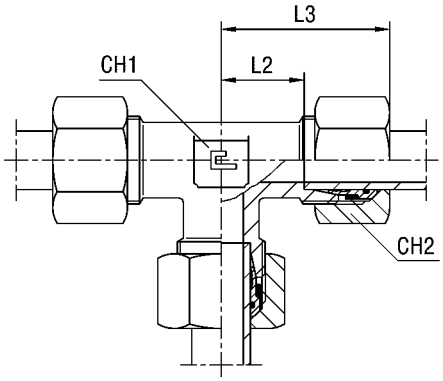

Serie	Bar	Ordering Body	Ordering Equipped B3	Ø Tube	L1	L2	L3	CH1	CH2	Ordering Equipped B4
LL	100	103901.1	103901	4	15	11	21	9	10	-
		103902.1	103902	6	15	9,5	21	9	12	-
		103903.1	103903	8	17	11,5	23	12	14	-
L	315	103904.1	103904	6	19	12	27	12	14	103904.4
		103905.1	103905	8	21	14	29	12	17	103905.4
		103906.1	103906	10	22	15	30	14	19	103906.4
		103907.1	103907	12	24	17	32	17	22	103907.4
		103908.1	103908	15	28	21	36	19	27	103908.4
		103909.1	103909	18	31	23,5	40	24	32	103909.4
	160	103910.1	103910	22	35	27,5	44	27	36	103910.4
		103911.1	103911	28	38	30,5	47	36	41	103911.4
		103912.1	103912	35	45	34,5	56	41	50	103912.4
		103913.1	103913	42	51	40	63	50	60	103913.4
S	630	103914.1	103914	6	23	16	31	12	17	103914.4
		103915.1	103915	8	24	17	32	14	19	103915.4
		103916.1	103916	10	25	17,5	34	17	22	103916.4
		103917.1	103917	12	29	21,5	38	17	24	103917.4
		103918.1	103918	14	30	22	40	19	27	103918.4
	400	103919.1	103919	16	33	24,5	43	24	30	103919.4
		103920.1	103920	20	37	26,5	48	27	36	103920.4
		103921.1	103921	25	42	30	54	36	46	103921.4
		103922.1	103922	30	49	35,5	62	41	50	103922.4
	315	103923.1	103923	38	57	41	72	50	60	103923.4

Note: If you wish to order a fitting in stainless steel, please change the first two digit from **10..** to **11..**

EQUAL CROSS

Type: **1040…1** Only Body

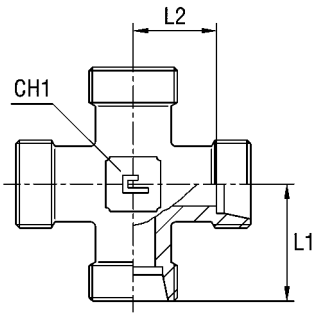

Type: **1040..** B3 Ring

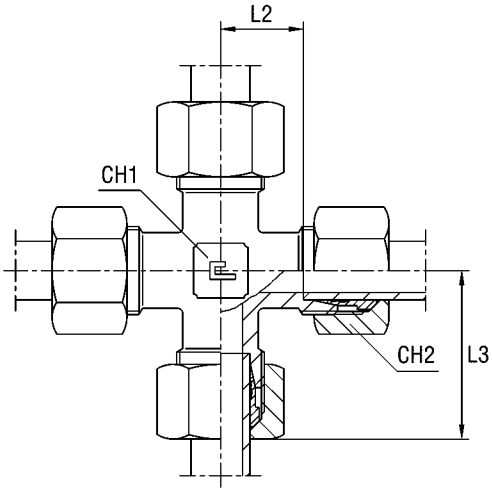

Type: **1040…4** B4 Ring

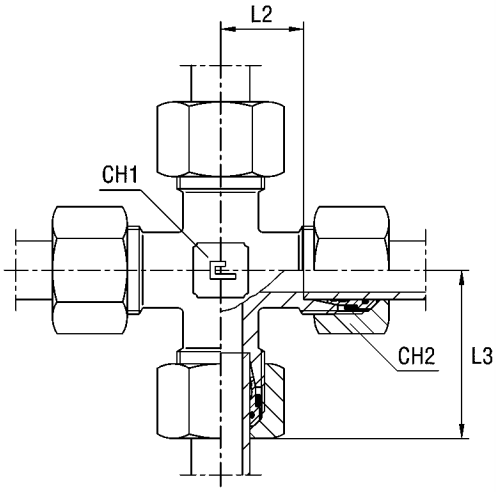

Serie	Bar	Ordering Body	Ordering Equipped B3	Ø Tube	L1	L2	L3	CH1	CH2	Ordering Equipped B4
LL	100	104001.1	104001	4	15	11	21	9	10	
		104002.1	104002	6	15	9,5	21	9	12	
		104003.1	104003	8	17	11,5	23	12	14	
L	315	104004.1	104004	6	19	12	27	12	14	104004.4
		104005.1	104005	8	21	14	29	12	17	104005.4
		104006.1	104006	10	22	15	30	14	19	104006.4
		104007.1	104007	12	24	17	32	17	22	104007.4
		104008.1	104008	15	28	21	36	19	27	104008.4
		104009.1	104009	18	31	23,5	40	24	32	104009.4
	160	104010.1	104010	22	35	27,5	44	27	36	104010.4
		104011.1	104011	28	38	30,5	47	36	41	104011.4
		104012.1	104012	35	45	34,5	56	41	50	104012.4
		104013.1	104013	42	51	40	63	50	60	104013.4
S	630	104014.1	104014	6	23	16	31	12	17	104014.4
		104015.1	104015	8	24	17	32	14	19	104015.4
		104016.1	104016	10	25	17,5	34	17	22	104016.4
		104017.1	104017	12	29	21,5	38	17	24	104017.4
		104018.1	104018	14	30	22	40	19	27	104018.4
	400	104019.1	104019	16	33	24,5	43	24	30	104019.4
		104020.1	104020	20	37	26,5	48	27	36	104020.4
		104021.1	104021	25	42	30	54	36	46	104021.4
		104022.1	104022	30	49	35,5	62	41	50	104022.4
	315	104023.1	104023	38	57	41	72	50	60	104023.4

Note: If you wish to order a fitting in stainless steel, please change the first two digit from **10..** to **11..**

STRAIGHT REDUCING COUPLING

Type: **1041...1** Only Body

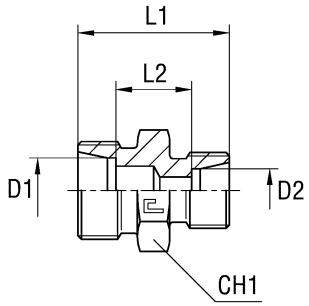

Type: **1041..** B3 Ring

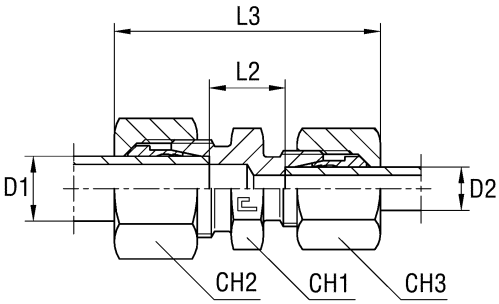

Type: **1041...4** B4 Ring

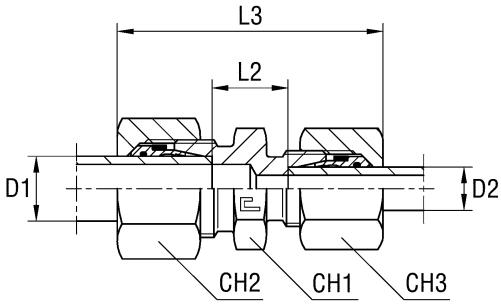

Serie	Bar	Ordering Body	Ordering Equipped B3	Ø Tube D1	Ø Tube D2	L1	L2	L3	CH1	CH2	CH3	Ordering Equipped B4
L	315	104104.1	104104	8	6	25	11	40,5	14	17	14	104104.4
		104105.1	104105	10	6	26	12	41,5	17	19	14	104105.4
		104106.1	104106	10	8	26	12	42	17	19	17	104106.4
		104107.1	104107	12	6	27	13	42	19	22	14	104107.4
		104108.1	104108	12	8	27	13	42,5	19	22	17	104108.4
		104109.1	104109	12	10	28	14	43,5	19	22	19	104109.4
		104110.1	104110	15	10	29	15	45	24	27	19	104110.4
		104111.1	104111	15	12	29	15	44,5	24	27	22	104111.4
		104112.1	104112	18	10	30	15,5	47	27	32	19	104112.4
		104113.1	104113	18	12	30	15,5	46,5	27	32	22	104113.4
		104114.1	104114	18	15	31	16,5	48	27	32	27	104114.4
	160	104115.1	104115	22	12	32	17,5	48,5	32	36	22	104115.4
		104116.1	104116	22	15	33	18,5	50	32	36	27	104116.4
		104117.1	104117	22	18	33	18	51	32	36	32	104117.4
		104118.1	104118	28	18	34	19	52	41	41	32	104118.4
		104119.1	104119	28	22	36	21	54	41	41	36	104119.4
		104120.1	104120	35	22	39	21	59	46	50	36	104120.4
		104121.1	104121	35	28	39	21	59	46	50	41	104121.4
S	630	104122.1	104122	8	6	32	18	48	17	19	17	104122.4
		104123.1	104123	10	6	32	17,5	48,5	19	22	17	104123.4
		104124.1	104124	10	8	32	17,5	48,5	19	22	19	104124.4
		104125.1	104125	12	6	34	19,5	50,5	22	24	17	104125.4
		104126.1	104126	12	8	34	19,5	50,5	22	24	19	104126.4
		104127.1	104127	12	10	34	19	51	22	24	22	104127.4
		104128.1	104128	14	10	36	20,5	54,5	24	27	22	104128.4
		104129.1	104129	14	12	36	20,5	54,5	24	27	24	104129.4
	400	104130.1	104130	16	12	36	20	54,5	27	30	24	104130.4
		104131.1	104131	16	14	38	21,5	58	27	30	27	104131.4
		104132.1	104132	20	10	40	22	59,5	32	36	22	104132.4
		104133.1	104133	20	12	40	22	59,5	32	36	24	104133.4
		104134.1	104134	20	16	42	23	63	32	36	30	104134.4
		104135.1	104135	25	16	46	25,5	68	41	46	30	104135.4
		104136.1	104136	25	20	48	25,5	71	41	46	36	104136.4
		104137.1	104137	30	20	50	26	74	46	50	36	104137.4
		104138.1	104138	30	25	52	26,5	77	46	50	46	104138.4
	315	104139.1	104139	38	30	59	29,5	87	55	60	50	104139.4

Note: If you wish to order a fitting in stainless steel, please change the first two digit from **10..** to **11..**
Articles available on scheduled orders only

ADJUSTABLE MALE STUD ELBOW

Type: **10LT...1** Only Body

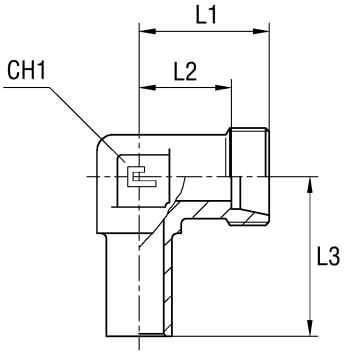

Type: **10LT..** B3 Ring

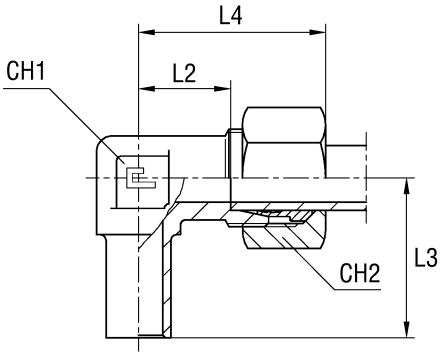

Type: **10LT...4** B4 Ring

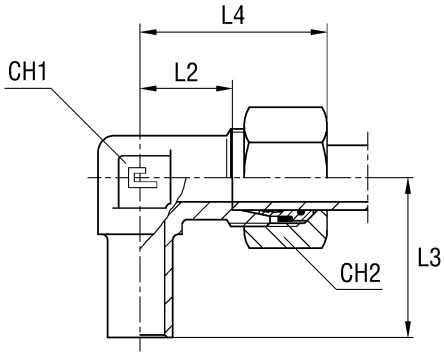

Serie	Bar	Ordering Body	Ordering Assembled B3	Ø Tube	L1	L2	L3	L4	CH1	CH2	Ordering Assembled B4
L	315	10LT04.1	10LT04	6	19	12	26	27	12	14	10LT04.4
		10LT05.1	10LT05	8	21	14	27,5	29	12	17	10LT05.4
		10LT06.1	10LT06	10	22	15	29	30	14	19	10LT06.4
		10LT07.1	10LT07	12	24	17	29,5	32	17	22	10LT07.4
		10LT08.1	10LT08	15	28	21	32,5	36	19	27	10LT08.4
		10LT09.1	10LT09	18	31	23,5	35,5	40	24	32	10LT09.4
	160	10LT10.1	10LT10	22	35	27,5	38,5	44	27	36	10LT10.4
		10LT11.1	10LT11	28	38	30,5	41,5	47	36	41	10LT11.4
		10LT12.1	10LT12	35	45	34,5	51	56	41	50	10LT12.4
		10LT13.1	10LT13	42	51	40	56	63	50	60	10LT13.4
S	630	10LT14.1	10LT14	6	23	16	27	31	12	17	10LT14.4
		10LT15.1	10LT15	8	24	17	27,5	32	14	19	10LT15.4
		10LT16.1	10LT16	10	25	17,5	30	34	17	22	10LT16.4
		10LT17.1	10LT17	12	29	21,5	31	38	17	24	10LT17.4
		10LT18.1	10LT18	14	30	22	35	40	19	27	10LT18.4
	400	10LT19.1	10LT19	16	33	24,5	36,5	43	24	30	10LT19.4
		10LT20.1	10LT20	20	37	26,5	44,5	48	27	36	10LT20.4
		10LT21.1	10LT21	25	42	30	50	54	36	46	10LT21.4
		10LT22.1	10LT22	30	49	35,5	55	62	41	50	10LT22.4
	315	10LT23.1	10LT23	38	57	41	63	72	50	60	10LT23.4

Note: If you wish to order a fitting in stainless steel, please change the first two digit from **10..** to **11..**

ADJUSTABLE MALE STUD ELBOW

Type: **1042…1** B3 Ring

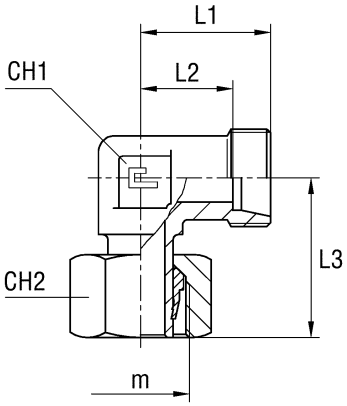

Type: **1042…1.4** B4 Ring

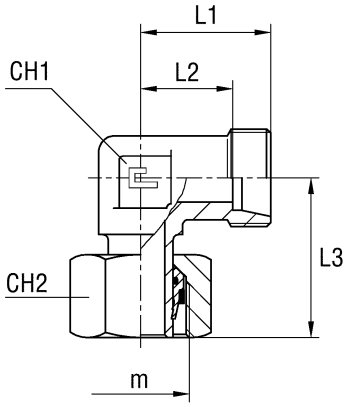

Serie	Bar	Ordering Preassembled B3	Ø Tube	m	L1	L2	L3	CH1	CH2	Ordering Preassembled B4
L	315	104204.1	6	12x1,5	19	12	26	12	14	104204.1.4
		104205.1	8	14x1,5	21	14	27,5	12	17	104205.1.4
		104206.1	10	16x1,5	22	15	29	14	19	104206.1.4
		104207.1	12	18x1,5	24	17	29,5	17	22	104207.1.4
		104208.1	15	22x1,5	28	21	32,5	19	27	104208.1.4
		104209.1	18	26x1,5	31	23,5	35,5	24	32	104209.1.4
	160	104210.1	22	30x2	35	27,5	38,5	27	36	104210.1.4
		104211.1	28	36x2	38	30,5	41,5	36	41	104211.1.4
		104212.1	35	45x2	45	34,5	51	41	50	104212.1.4
		104213.1	42	52x2	51	40	56	50	60	104213.1.4
S	630	104214.1	6	14x1,5	23	16	27	12	17	104214.1.4
		104215.1	8	16x1,5	24	17	27,5	14	19	104215.1.4
		104216.1	10	18x1,5	25	17,5	30	17	22	104216.1.4
		104217.1	12	20x1,5	29	21,5	31	17	24	104217.1.4
		104218.1	14	22x1,5	30	22	35	19	27	104218.1.4
	400	104219.1	16	24x1,5	33	24,5	36,5	24	30	104219.1.4
		104220.1	20	30x2	37	26,5	44,5	27	36	104220.1.4
		104221.1	25	36x2	42	30	50	36	46	104221.1.4
		104222.1	30	42x2	49	35,5	55	41	50	104222.1.4
	315	104223.1	38	52x2	57	41	63	50	60	104223.1.4

Note: If you wish to order a fitting in stainless steel, please change the first two digit from **10..** to **11..**

ADJUSTABLE MALE STUD ELBOW

Type: **1042..** B3 Ring

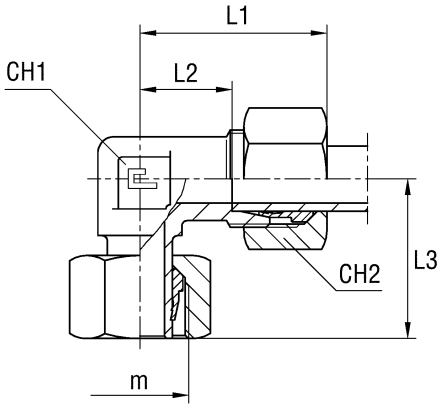

Type: **1042...4** B4 Ring

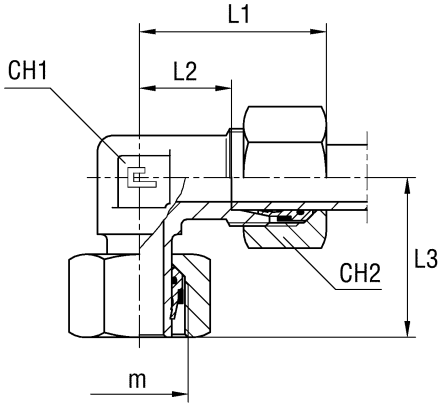

Serie	Bar	Ordering Equipped B3	Ø Tube	m	L1	L2	L3	CH1	CH2	Ordering Equipped B4
L	315	104204	6	12x1,5	27	12	26	12	14	104204.4
		104205	8	14x1,5	29	14	27,5	12	17	104205.4
		104206	10	16x1,5	30	15	29	14	19	104206.4
		104207	12	18x1,5	32	17	29,5	17	22	104207.4
		104208	15	22x1,5	36	21	32,5	19	27	104208.4
		104209	18	26x1,5	40	23,5	35,5	24	32	104209.4
	160	104210	22	30x2	44	27,5	38,5	27	36	104210.4
		104211	28	36x2	47	30,5	41,5	36	41	104211.4
		104212	35	45x2	56	34,5	51	41	50	104212.4
		104213	42	52x2	63	40	56	50	60	104213.4
S	630	104214	6	14x1,5	31	16	27	12	17	104214.4
		104215	8	16x1,5	32	17	27,5	14	19	104215.4
		104216	10	18x1,5	34	17,5	30	17	22	104216.4
		104217	12	20x1,5	38	21,5	31	17	24	104217.4
		104218	14	22x1,5	40	22	35	19	27	104218.4
	400	104219	16	24x1,5	43	24,5	36,5	24	30	104219.4
		104220	20	30x2	48	26,5	44,5	27	36	104220.4
		104221	25	36x2	54	30	50	36	46	104221.4
		104222	30	42x2	62	35,5	55	41	50	104222.4
	315	104223	38	52x2	72	41	63	50	60	104223.4

Note: If you wish to order a fitting in stainless steel, please change the first two digit from **10..** to **11..**

ADJUSTABLE MALE STUD ELBOW WITH MALE STUD
Thread BSP Parallel - Thread Metric Parallel

Type: **1043…1** B3 Ring
Type: **1044…1** B3 Ring

1043…1.4 B4 Ring
1044…1.4 B4 Ring

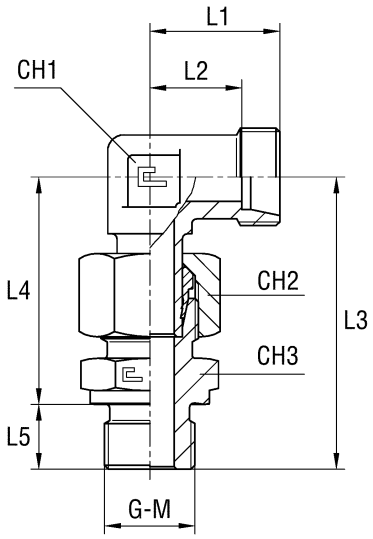

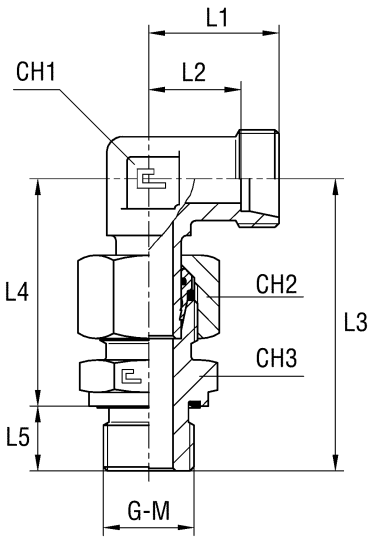

Serie	Bar	Ordering Preassembled B3	Ø Tube	G	L1	L2	L3	L4	L5	CH1	CH2	CH3	Ordering Preassembled B4
L	315	104304.1	6	1/8	19	12	42,5	34,5	8	12	14	14	104304.1.4
		104305.1	8	1/4	21	14	49	37	12	12	17	19	104305.1.4
		104306.1	10	1/4	22	15	51,5	39,5	12	14	19	19	104306.1.4
		104307.1	12	3/8	24	17	53,5	41,5	12	17	22	22	104307.1.4
		104308.1	15	1/2	28	21	60	46	14	19	27	27	104308.1.4
		104309.1	18	1/2	31	23,5	63,5	49,5	14	24	32	27	104309.1.4
	160	104310.1	22	3/4	35	27,5	70,5	54,5	16	27	36	32	104310.1.4
		104311.1	28	1	38	30,5	77	59	18	36	41	41	104311.1.4
		104312.1	35	1 1/4	45	34,5	88,5	68,5	20	41	50	50	104312.1.4
		104313.1	42	1 1/2	51	40	97	75	22	50	60	55	104313.1.4
S	630	104314.1	6	1/4	23	16	52	40	12	12	17	19	104314.1.4
		104315.1	8	1/4	24	17	54	42	12	14	19	19	104315.1.4
		104316.1	10	3/8	25	17,5	56,5	44,5	12	17	22	22	104316.1.4
		104317.1	12	3/8	29	21,5	59,5	47,5	12	17	24	22	104317.1.4
		104318.1	14	1/2	30	22	67,5	53,5	14	19	27	27	104318.1.4
	400	104319.1	16	1/2	33	24,5	68,5	54,5	14	24	30	27	104319.1.4
		104320.1	20	3/4	37	26,5	80,5	64,5	16	27	36	32	104320.1.4
		104321.1	25	1	42	30	90,5	72,5	18	36	46	41	104321.1.4
		104322.1	30	1 1/4	49	35,5	98,5	78,5	20	41	50	50	104322.1.4
	315	104323.1	38	1 1/2	57	41	111	89	22	50	60	55	104323.1.4

Note: If you wish to order a fitting in stainless steel, please change the first two digit from **10..** to **11..**

Serie	Bar	Ordering Preassembled B3	Ø Tube	M	L1	L2	L3	L4	L5	CH1	CH2	CH3	Ordering Preassembled B4
L	315	104404.1	6	10x1	19	12	42,5	34,5	8	12	14	14	104404.1.4
		104405.1	8	12x1,5	21	14	49	37	12	12	17	17	104405.1.4
		104406.1	10	14x1,5	22	15	51,5	39,5	12	14	19	19	104406.1.4
		104407.1	12	16x1,5	24	17	53,5	41,5	12	17	22	22	104407.1.4
		104408.1	15	18x1,5	28	21	57,5	45,5	14	19	27	24	104408.1.4
		104409.1	18	22x1,5	31	23,5	63,5	49,5	14	24	32	27	104409.1.4
	160	104410.1	22	26x1,5	35	27,5	70,5	54,5	16	27	36	32	104410.1.4
		104411.1	28	33x2	38	30,5	77	59	18	36	41	41	104411.1.4
		104412.1	35	42x2	45	34,5	88,5	68,5	20	41	50	50	104412.1.4
		104413.1	42	48x2	51	40	97	75	22	50	60	55	104413.1.4
S	630	104414.1	6	12x1,5	23	16	52	40	12	12	17	17	104414.1.4
		104415.1	8	14x1,5	24	17	54	42	12	14	19	19	104415.1.4
		104416.1	10	16x1,5	25	17,5	56,5	44,5	12	17	22	22	104416.1.4
		104417.1	12	18x1,5	29	21,5	59,5	47,5	12	17	24	24	104417.1.4
		104418.1	14	20x1,5	30	22	67,5	53,5	14	19	27	27	104418.1.4
	400	104419.1	16	22x1,5	33	24,5	68,5	54,5	14	24	30	27	104419.1.4
		104420.1	20	27x2	37	26,5	80,5	64,5	16	27	36	32	104420.1.4
		104421.1	25	33x2	42	30	90,5	72,5	18	36	46	41	104421.1.4
		104422.1	30	42x2	49	35,5	98,5	78,5	20	41	50	50	104422.1.4
	315	104423.1	38	48x2	57	41	111	89	22	50	60	55	104423.1.4

Note: If you wish to order a fitting in stainless steel, please change the first two digit from **10..** to **11..**

ADJUSTABLE MALE STUD ELBOW WITH MALE STUD
Thread BSP Parallel - Thread Metric Parallel

Type: **1043..** B3 Ring
Type: **1044..** B3 Ring

Type: **1043...4** B4 Ring
Type: **1044...4** B4 Ring

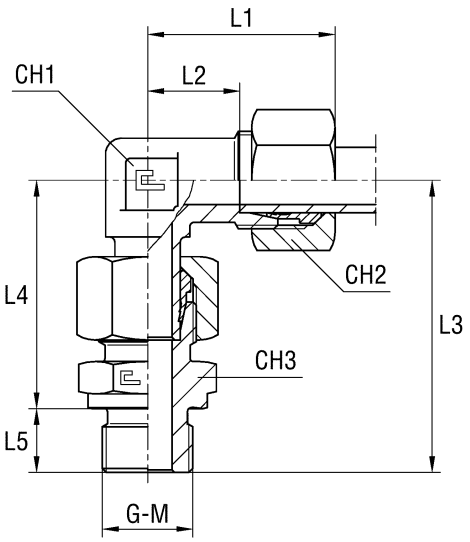

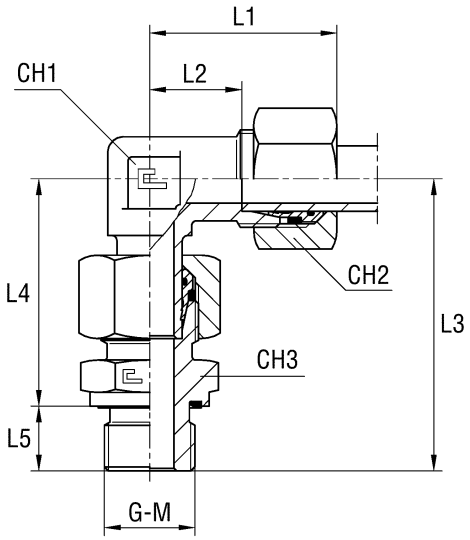

Serie	Bar	Ordering Preassembled B3	Ø Tube	G	L1	L2	L3	L4	L5	CH1	CH2	CH3	Ordering Preassembled B4
L	315	104304	6	1/8	27	12	42,5	34,5	8	12	14	14	104304.4
		104305	8	1/4	29	14	49	37	12	12	17	19	104305.4
		104306	10	1/4	30	15	51,5	39,5	12	14	19	19	104306.4
		104307	12	3/8	32	17	53,5	41,5	12	17	22	22	104307.4
		104308	15	1/2	36	21	60	46	14	19	27	27	104308.4
		104309	18	1/2	40	23,5	63,5	49,5	14	24	32	27	104309.4
	160	104310	22	3/4	44	27,5	70,5	54,5	16	27	36	32	104310.4
		104311	28	1	47	30,5	77	59	18	36	41	41	104311.4
		104312	35	1 1/4	56	34,5	88,5	68,5	20	41	50	50	104312.4
		104313	42	1 1/2	63	40	97	75	22	50	60	55	104313.4
S	630	104314	6	1/4	31	16	52	40	12	12	17	19	104314.4
		104315	8	1/4	32	17	54	42	12	14	19	19	104315.4
		104316	10	3/8	34	17,5	56,5	44,5	12	17	22	22	104316.4
		104317	12	3/8	38	21,5	59,5	47,5	12	17	24	22	104317.4
		104318	14	1/2	40	22	67,5	53,5	14	19	27	27	104318.4
	400	104319	16	1/2	43	24,5	68,5	54,5	14	24	30	27	104319.4
		104320	20	3/4	48	26,5	80,5	64,5	16	27	36	32	104320.4
		104321	25	1	54	30	90,5	72,5	18	36	46	41	104321.4
		104322	30	1 1/4	62	35,5	98,5	78,5	20	41	50	50	104322.4
	315	104323	38	1 1/2	72	41	111	89	22	50	60	55	104323.4

Note: If you wish to order a fitting in stainless steel, please change the first two digit from **10..** to **11..**

Serie	Bar	Ordering Preassembled B3	Ø Tube	M	L1	L2	L3	L4	L5	CH1	CH2	CH3	Ordering Preassembled B4
L	315	104404	6	10x1	27	12	42,5	34,5	8	12	14	14	104404.4
		104405	8	12x1,5	29	14	49	37	12	12	17	17	104405.4
		104406	10	14x1,5	30	15	51,5	39,5	12	14	19	19	104406.4
		104407	12	16x1,5	32	17	53,5	41,5	12	17	22	22	104407.4
		104408	15	18x1,5	36	21	57,5	45,5	14	19	27	24	104408.4
		104409	18	22x1,5	40	23,5	63,5	49,5	14	24	32	27	104409.4
	160	104410	22	26x1,5	44	27,5	70,5	54,5	16	27	36	32	104410.4
		104411	28	33x2	47	30,5	77	59	18	36	41	41	104411.4
		104412	35	42x2	56	34,5	88,5	68,5	20	41	50	50	104412.4
		104413	42	48x2	63	40	97	75	22	50	60	55	104413.4
S	630	104414	6	12x1,5	31	16	52	40	12	12	17	17	104414.4
		104415	8	14x1,5	32	17	54	42	12	14	19	19	104415.4
		104416	10	16x1,5	34	17,5	56,5	44,5	12	17	22	22	104416.4
		104417	12	18x1,5	38	21,5	59,5	47,5	12	17	24	24	104417.4
		104418	14	20x1,5	40	22	67,5	53,5	14	19	27	27	104418.4
	400	104419	16	22x1,5	43	24,5	68,5	54,5	14	24	30	27	104419.4
		104420	20	27x2	48	26,5	80,5	64,5	16	27	36	32	104420.4
		104421	25	33x2	54	30	90,5	72,5	18	36	46	41	104421.4
		104422	30	42x2	62	35,5	98,5	78,5	20	41	50	50	104422.4
	315	104423	38	48x2	72	41	111	89	22	50	60	55	104423.4

Note: If you wish to order a fitting in stainless steel, please change the first two digit from **10..** to **11..**

REDUCING TEE

Type: **1045…1** Only Body

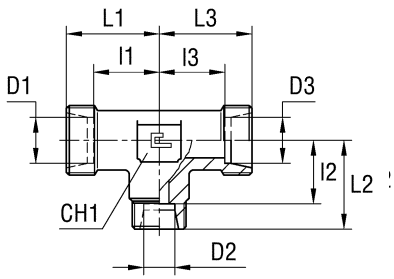

Type: **1045..** B3 Ring

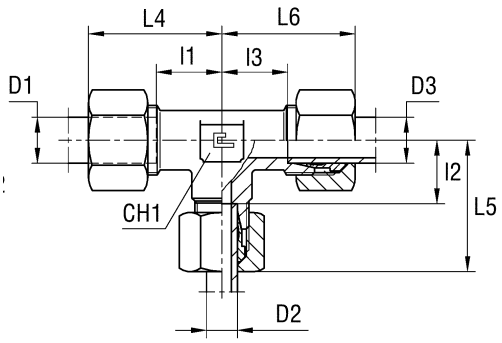

Type: **1045…4** B4 Ring

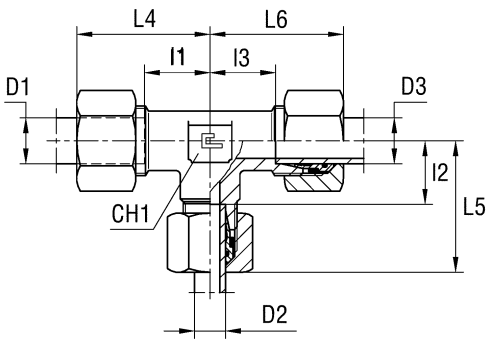

Serie	Bar	Ordering Body	Ordering Equipped B3	Ø Tube			L1	L2	L3	L4	L5	L6	I1	I2	I3	CH1	Ordering Equipped B4
				D1	D2	D3											
L	315	104503.1	104503	6	8	6	21	21	21	29	29	29	14	14	14	12	104503.4
		104504.1	104504	8	6	8	21	21	21	29	29	29	14	14	14	12	104504.4
		104505.1	104505	6	10	6	21	22	21	29	30	29	14	15	14	14	104505.4
		104506.1	104506	8	10	8	21	22	21	29	30	29	14	15	14	14	104506.4
		104507.1	104507	10	6	10	22	21	22	30	29	30	15	14	15	14	104507.4
		104508.1	104508	10	8	10	22	21	22	30	29	30	15	14	15	14	104508.4
		104509.1	104509	10	10	6	22	22	21	30	30	29	15	15	14	14	104509.4
		104510.1	104510	8	12	8	23	24	23	31	32	31	16	17	16	17	104510.4
		104511.1	104511	12	6	12	24	23	24	32	31	32	17	16	17	17	104511.4
		104512.1	104512	12	8	8	24	23	23	32	31	31	17	16	16	17	104512.4
		104513.1	104513	12	8	12	24	23	24	32	31	32	17	16	17	17	104513.4
		104514.1	104514	12	10	10	24	24	24	32	32	32	17	17	17	17	104514.4
		104515.1	104515	12	10	12	24	24	24	32	32	32	17	17	17	17	104515.4
		104516.1	104516	12	12	10	24	24	24	32	32	32	17	17	17	17	104516.4
		104517.1	104517	10	15	10	27	28	27	35	36	35	20	21	20	19	104517.4
		104518.1	104518	12	15	12	27	28	27	35	36	35	20	21	20	19	104518.4
		104519.1	104519	15	6	15	28	25	28	36	33	36	21	18	21	19	104519.4
		104520.1	104520	15	10	15	28	27	28	36	35	36	21	20	21	19	104520.4
		104521.1	104521	15	12	12	28	27	27	36	35	35	21	20	20	19	104521.4
		104522.1	104522	15	12	15	28	27	28	36	35	36	21	20	21	19	104522.4
		104523.1	104523	15	15	12	28	28	27	36	36	35	21	21	20	19	104523.4
		104524.1	104524	12	18	12	30	31	30	38	40	38	23	23,5	23	24	104524.4
		104525.1	104525	18	10	10	31	30	30	40	38	38	23,5	23	23	24	104525.4
		104526.1	104526	18	10	18	31	30	31	40	38	40	23,5	23	23,5	24	104526.4
		104527.1	104527	18	12	18	31	30	31	40	38	40	23,5	23	23,5	24	104527.4
		104528.1	104528	18	15	18	31	31	31	40	39	40	23,5	24	23,5	24	104528.4
		104529.1	104529	18	18	10	31	31	30	40	40	38	23,5	23,5	23	24	104529.4
	160	104530.1	104530	22	10	22	35	33	35	44	41	44	27,5	26	27,5	27	104530.4
		104531.1	104531	22	12	22	35	33	35	44	41	44	27,5	26	27,5	27	104531.4
		104532.1	104532	22	15	15	35	34	34	44	42	42	27,5	27	27	27	104532.4
		104533.1	104533	22	15	22	35	34	35	44	42	44	27,5	27	27,5	27	104533.4
		104534.1	104534	22	18	18	35	34	34	44	43	43	27,5	26,5	26,5	27	104534.4
		104535.1	104535	22	18	22	35	34	35	44	43	44	27,5	26,5	27,5	27	104535.4
		104536.1	104536	22	22	18	35	35	34	44	44	43	27,5	27,5	26,5	27	104536.4
		104537.1	104537	28	10	28	38	36	38	47	44	47	30,5	29	30,5	36	104537.4
		104538.1	104538	28	12	28	38	36	38	47	44	47	30,5	29	30,5	36	104538.4
		104539.1	104539	28	15	28	38	37	38	47	45	47	30,5	30	30,5	36	104539.4
		104540.1	104540	28	18	28	38	37	38	47	46	47	30,5	29,5	30,5	36	104540.4
		104541.1	104541	28	22	22	38	38	38	47	47	47	30,5	30,5	30,5	36	104541.4
		104542.1	104542	28	22	28	38	38	38	47	47	47	30,5	30,5	30,5	36	104542.4

Note: If you wish to order a fitting in stainless steel, please change the first two digit from **10..** to **11..**
Articles available on request only

REDUCING TEE

Type: **1045…1** Only Body

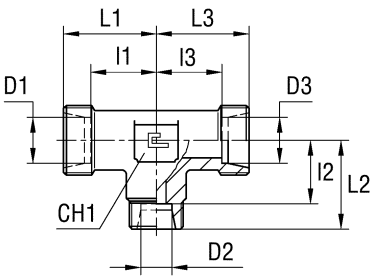

Type: **1045..** B3 Ring

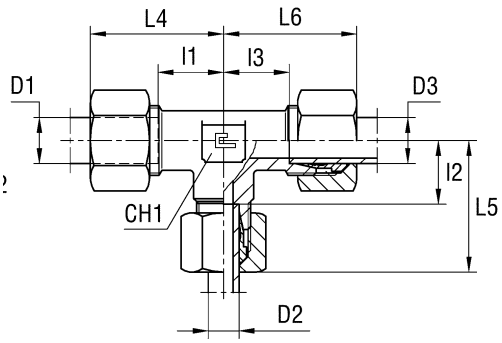

Type: **1045…4** B4 Ring

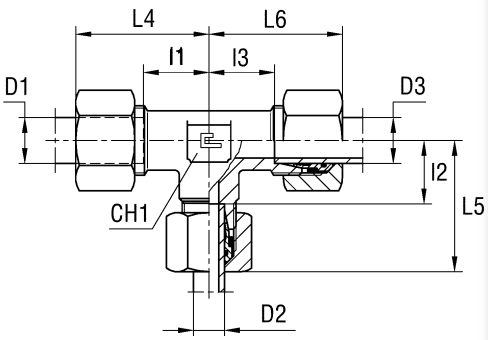

Serie	Bar	Ordering Body	Ordering Equipped B3	Ø Tube			L1	L2	L3	L4	L5	L6	l1	l2	l3	CH1	Ordering Equipped B4
				D1	D2	D3											
S	630	104543.1	104543	10	6	10	25	25	25	34	33	34	17,5	18	17,5	17	104543.4
		104544.1	104544	12	8	8	29	25	25	38	33	33	21,5	18	18	19	104544.4
		104545.1	104545	12	8	12	29	25	29	38	33	38	21,5	18	21,5	19	104545.4
		104546.1	104546	12	10	12	29	25	29	38	34	38	21,5	17,5	21,5	19	104546.4
	400	104547.1	104547	12	16	12	31	33	31	40	43	40	23,5	24,5	23,5	24	104547.4
		104548.1	104548	16	6	16	33	31	33	43	39	43	24,5	24	24,5	24	104548.4
		104549.1	104549	16	8	16	33	31	33	43	39	43	24,5	24	24,5	24	104549.4
		104550.1	104550	16	10	16	33	31	33	43	40	43	24,5	23,5	24,5	24	104550.4
		104551.1	104551	16	12	16	33	31	33	43	40	43	24,5	23,5	24,5	24	104551.4
		104552.1	104552	16	20	16	36	37	36	46	48	46	27,5	26,5	27,5	27	104552.4
		104553.1	104553	20	10	20	37	34	37	48	43	48	26,5	26,5	26,5	27	104553.4
		104554.1	104554	20	12	20	37	34	37	48	43	48	26,5	26,5	26,5	27	104554.4
		104555.1	104555	20	16	20	37	36	37	48	46	48	26,5	27,5	26,5	27	104555.4
		104556.1	104556	20	25	20	40	42	40	51	54	51	29,5	30	29,5	36	104556.4
		104557.1	104557	25	16	25	42	39	42	54	49	54	30	30,5	30	36	104557.4
		104558.1	104558	25	20	25	42	40	42	54	51	54	30	29,5	30	36	104558.4
		104559.1	104559	25	30	25	47	49	47	59	62	59	35	35,5	35	41	104559.4

Note: If you wish to order a fitting in stainless steel, please change the first two digit from **10..** to **11..**
Articles available on request only

ADJUSTABLE MALE STUD BARREL TEE

Type: **10NTL...1** Only Body

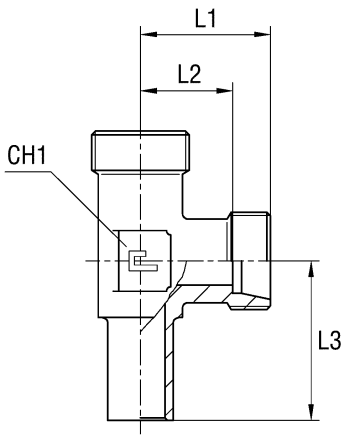

Type: **10NTL..** B3 Ring

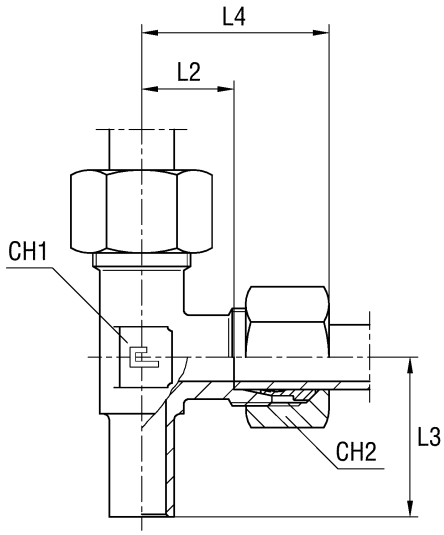

10NTL...4 B4 Ring

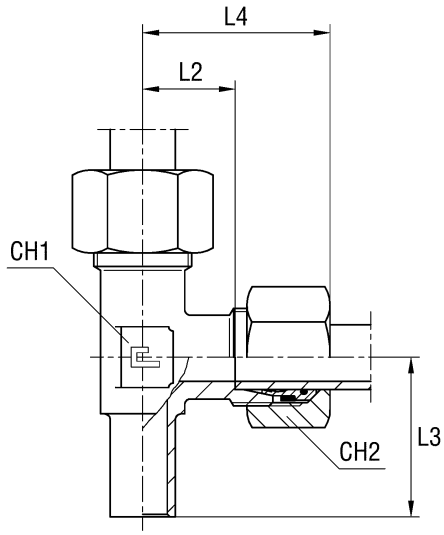

Serie	Bar	Ordering Body	Ordering Assembled B3	Ø Tube	L1	L2	L3	L4	CH1	CH2	Ordering Assembled B4
L	315	10NTL04.1	10NTL04	6	19	12	26	27	12	14	10NTL04.4
		10NTL05.1	10NTL05	8	21	14	27,5	29	12	17	10NTL05.4
		10NTL06.1	10NTL06	10	22	15	29	30	14	19	10NTL06.4
		10NTL07.1	10NTL07	12	24	17	29,5	32	17	22	10NTL07.4
		10NTL08.1	10NTL08	15	28	21	32,5	36	19	27	10NTL08.4
		10NTL09.1	10NTL09	18	31	23,5	35,5	40	24	32	10NTL09.4
	160	10NTL10.1	10NTL10	22	35	27,5	38,5	44	27	36	10NTL10.4
		10NTL11.1	10NTL11	28	38	30,5	41,5	47	36	41	10NTL11.4
		10NTL12.1	10NTL12	35	45	34,5	51	56	41	50	10NTL12.4
		10NTL13.1	10NTL13	42	51	40	56	63	50	60	10NTL13.4
S	630	10NTL14.1	10NTL14	6	23	16	27	31	12	17	10NTL14.4
		10NTL15.1	10NTL15	8	24	17	27,5	32	14	19	10NTL15.4
		10NTL16.1	10NTL16	10	25	17,5	30	34	17	22	10NTL16.4
		10NTL17.1	10NTL17	12	29	21,5	31	38	17	24	10NTL17.4
		10NTL18.1	10NTL18	14	30	22	35	40	19	27	10NTL18.4
	400	10NTL19.1	10NTL19	16	33	24,5	36,5	43	24	30	10NTL19.4
		10NTL20.1	10NTL20	20	37	26,5	44,5	48	27	36	10NTL20.4
		10NTL21.1	10NTL21	25	42	30	50	54	36	46	10NTL21.4
		10NTL22.1	10NTL22	30	49	35,5	55	62	41	50	10NTL22.4
	315	10NTL23.1	10NTL23	38	57	41	63	72	50	60	10NTL23.4

Note: If you wish to order a fitting in stainless steel, please change the first two digit from **10..** to **11..**

ADJUSTABLE MALE STUD BARREL TEE

Type: **1046…1** B3 Ring

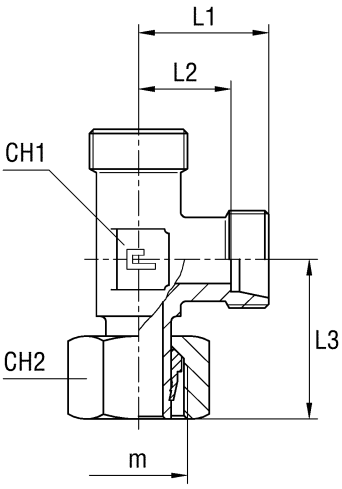

Type: **1046…1.4** B4 Ring

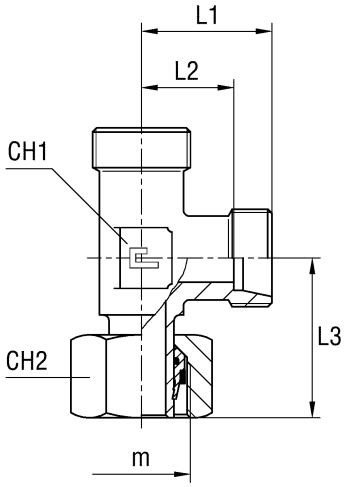

Serie	Bar	Ordering Preassembled B3	Ø Tube	m	L1	L2	L3	CH1	CH2	Ordering Preassembled B4
L	315	104604.1	6	12x1,5	19	12	26	12	14	104604.1.4
		104605.1	8	14x1,5	21	14	27,5	12	17	104605.1.4
		104606.1	10	16x1,5	22	15	29	14	19	104606.1.4
		104607.1	12	18x1,5	24	17	29,5	17	22	104607.1.4
		104608.1	15	22x1,5	28	21	32,5	19	27	104608.1.4
		104609.1	18	26x1,5	31	23,5	35,5	24	32	104609.1.4
	160	104610.1	22	30x2	35	27,5	38,5	27	36	104610.1.4
		104611.1	28	36x2	38	30,5	41,5	36	41	104611.1.4
		104612.1	35	45x2	45	34,5	51	41	50	104612.1.4
		104613.1	42	52x2	51	40	56	50	60	104613.1.4
S	630	104614.1	6	14x1,5	23	16	27	12	17	104614.1.4
		104615.1	8	16x1,5	24	17	27,5	14	19	104615.1.4
		104616.1	10	18x1,5	25	17,5	30	17	22	104616.1.4
		104617.1	12	20x1,5	29	21,5	31	17	24	104617.1.4
		104618.1	14	22x1,5	30	22	35	19	27	104618.1.4
	400	104619.1	16	24x1,5	33	24,5	36,5	24	30	104619.1.4
		104620.1	20	30x2	37	26,5	44,5	27	36	104620.1.4
		104621.1	25	36x2	42	30	50	36	46	104621.1.4
		104622.1	30	42x2	49	35,5	55	41	50	104622.1.4
	315	104623.1	38	52x2	57	41	63	50	60	104623.1.4

Note: If you wish to order a fitting in stainless steel, please change the first two digit from **10..** to **11..**

ADJUSTABLE MALE STUD BARREL TEE

Type: **1046..** B3 Ring

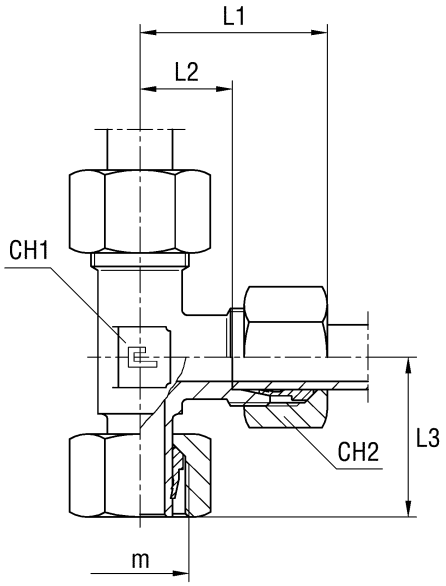

Type: **1046…4** B4 Ring

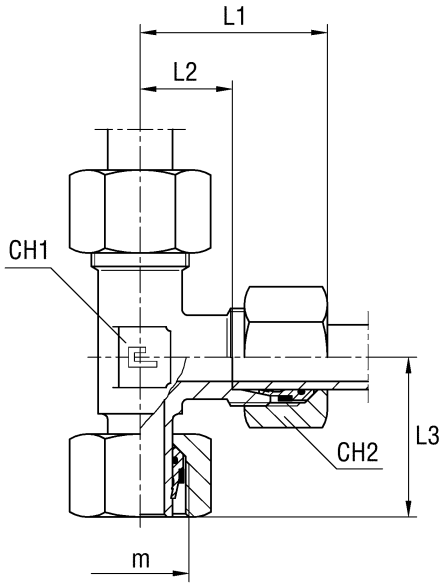

Serie	Bar	Ordering Equipped B3	Ø Tube	m	L1	L2	L3	CH1	CH2	Ordering Equipped B4
L	315	104604	6	12x1,5	27	12	26	12	14	104604.4
		104605	8	14x1,5	29	14	27,5	12	17	104605.4
		104606	10	16x1,5	30	15	29	14	19	104606.4
		104607	12	18x1,5	32	17	29,5	17	22	104607.4
		104608	15	22x1,5	36	21	32,5	19	27	104608.4
		104609	18	26x1,5	40	23,5	35,5	24	32	104609.4
	160	104610	22	30x2	44	27,5	38,5	27	36	104610.4
		104611	28	36x2	47	30,5	41,5	36	41	104611.4
		104612	35	45x2	56	34,5	51	41	50	104612.4
		104613	42	52x2	63	40	56	50	60	104613.4
S	630	104614	6	14x1,5	31	16	27	12	17	104614.4
		104615	8	16x1,5	32	17	27,5	14	19	104615.4
		104616	10	18x1,5	34	17,5	30	17	22	104616.4
		104617	12	20x1,5	38	21,5	31	17	24	104617.4
		104618	14	22x1,5	40	22	35	19	27	104618.4
	400	104619	16	24x1,5	43	24,5	36,5	24	30	104619.4
		104620	20	30x2	48	26,5	44,5	27	36	104620.4
		104621	25	36x2	54	30	50	36	46	104621.4
		104622	30	42x2	62	35,5	55	41	50	104622.4
	315	104623	38	52x2	72	41	63	50	60	104623.4

Note: If you wish to order a fitting in stainless steel, please change the first two digit from **10..** to **11..**

ADJUSTABLE MALE STUD BARREL TEE WITH MALE STUD
Thread BSP Parallel - Thread Metric Parallel

Type: **1047…1** B3 Ring
Type: **1048…1** B3 Ring

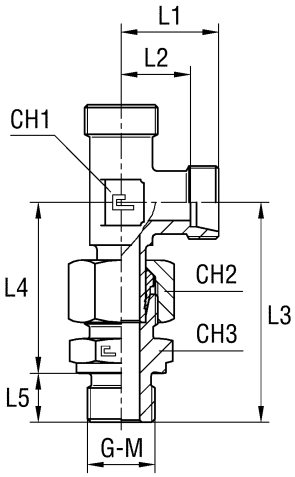

Type: **1047…1.4** B4 Ring
Type: **1048…1.4** B4 Ring

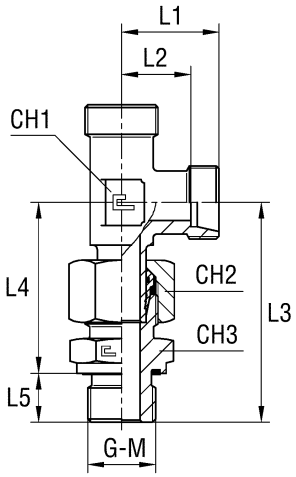

Serie	Bar	Ordering Preassembled B3	Ø Tube	G	L1	L2	L3	L4	L5	CH1	CH2	CH3	Ordering Preassembled B4
L	315	104704.1	6	1/8	19	12	42,5	34,5	8	12	14	14	104704.1.4
		104705.1	8	1/4	21	14	49	37	12	12	17	19	104705.1.4
		104706.1	10	1/4	22	15	51,5	39,5	12	14	19	19	104706.1.4
		104707.1	12	3/8	24	17	53,5	41,5	12	17	22	22	104707.1.4
		104708.1	15	1/2	28	21	60	46	14	19	27	27	104708.1.4
		104709.1	18	1/2	31	23,5	63,5	49,5	14	24	32	27	104709.1.4
	160	104710.1	22	3/4	35	27,5	70,5	54,5	16	27	36	32	104710.1.4
		104711.1	28	1	38	30,5	77	59	18	36	41	41	104711.1.4
		104712.1	35	1 1/4	45	34,5	88,5	68,5	20	41	50	50	104712.1.4
		104713.1	42	1 1/2	51	40	97	75	22	50	60	55	104713.1.4
S	630	104714.1	6	1/4	23	16	52	40	12	12	17	19	104714.1.4
		104715.1	8	1/4	24	17	54	42	12	14	19	19	104715.1.4
		104716.1	10	3/8	25	17,5	56,5	44,5	12	17	22	22	104716.1.4
		104717.1	12	3/8	29	21,5	59,5	47,5	12	17	24	22	104717.1.4
		104718.1	14	1/2	30	22	67,5	53,5	14	19	27	27	104718.1.4
	400	104719.1	16	1/2	33	24,5	68,5	54,5	14	24	30	27	104719.1.4
		104720.1	20	3/4	37	26,5	80,5	64,5	16	27	36	32	104720.1.4
		104721.1	25	1	42	30	90,5	72,5	18	36	46	41	104721.1.4
		104722.1	30	1 1/4	49	35,5	98,5	78,5	20	41	50	50	104722.1.4
	315	104723.1	38	1 1/2	57	41	111	89	22	50	60	55	104723.1.4

Note: If you wish to order a fitting in stainless steel, please change the first two digit from **10..** to **11..**

Serie	Bar	Ordering Preassembled	Ø Tube	M	L1	L2	L3	L4	L5	CH1	CH2	CH3	Ordering Preassembled B4
L	315	104804.1	6	10x1	19	12	42,5	34,5	8	12	14	14	104804.1.4
		104805.1	8	12x1,5	21	14	49	37	12	12	17	19	104805.1.4
		104806.1	10	14x1,5	22	15	51,5	39,5	12	14	19	19	104806.1.4
		104807.1	12	16x1,5	24	17	53,5	41,5	12	17	22	22	104807.1.4
		104808.1	15	18x1,5	28	21	60	46	14	19	27	27	104808.1.4
		104809.1	18	22x1,5	31	23,5	63,5	49,5	14	24	32	27	104809.1.4
	160	104810.1	22	26x1,5	35	27,5	70,5	54,5	16	27	36	32	104810.1.4
		104811.1	28	33x2	38	30,5	77	59	18	36	41	41	104811.1.4
		104812.1	35	42x2	45	34,5	88,5	68,5	20	41	50	50	104812.1.4
		104813.1	42	48x2	51	40	97	75	22	50	60	55	104813.1.4
S	630	104814.1	6	12x1,5	23	16	52	40	12	12	17	19	104814.1.4
		104815.1	8	14x1,5	24	17	54	42	12	14	19	19	104815.1.4
		104816.1	10	16x1,5	25	17,5	56,5	44,5	12	17	22	22	104816.1.4
		104817.1	12	18x1,5	29	21,5	59,5	47,5	12	17	24	22	104817.1.4
		104818.1	14	20x1,5	30	22	67,5	53,5	14	19	27	27	104818.1.4
	400	104819.1	16	22x1,5	33	24,5	68,5	54,5	14	24	30	27	104819.1.4
		104820.1	20	27x2	37	26,5	80,5	64,5	16	27	36	32	104820.1.4
		104821.1	25	33x2	42	30	90,5	72,5	18	36	46	41	104821.1.4
		104822.1	30	42x2	49	35,5	98,5	78,5	20	41	50	50	104822.1.4
	315	104823.1	38	48x2	57	41	111	89	22	50	60	55	104823.1.4

Note: If you wish to order a fitting in stainless steel, please change the first two digit from **10..** to **11..**

ADJUSTABLE MALE STUD BARREL TEE WITH MALE STUD
Thread BSP Parallel - Thread Metric Parallel

Type: **1047..** B3 Ring
Type: **1048..** B3 Ring

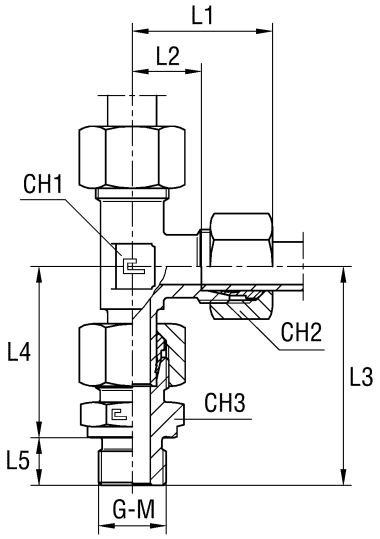

Type: **1047...4** B4 Ring
Type: **1048...4** B4 Ring

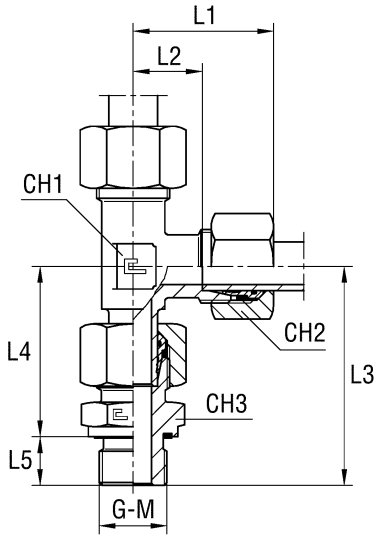

Serie	Bar	Ordering Equipped B3	Ø Tube	G	L1	L2	L3	L4	L5	CH1	CH2	CH3	Ordering Equipped B4
L	315	104704	6	1/8	27	12	42,5	34,5	8	12	14	14	104704.4
		104705	8	1/4	29	14	49	37	12	12	17	19	104705.4
		104706	10	1/4	30	15	51,5	39,5	12	14	19	19	104706.4
		104707	12	3/8	32	17	53,5	41,5	12	17	22	22	104707.4
		104708	15	1/2	36	21	60	46	14	19	27	27	104708.4
		104709	18	1/2	40	23,5	63,5	49,5	14	24	32	27	104709.4
	160	104710	22	3/4	44	27,5	70,5	54,5	16	27	36	32	104710.4
		104711	28	1	47	30,5	77	59	18	36	41	41	104711.4
		104712	35	1 1/4	56	34,5	88,5	68,5	20	41	50	50	104712.4
		104713	42	1 1/2	63	40	97	75	22	50	60	55	104713.4
S	630	104714	6	1/4	31	16	52	40	12	12	17	19	104714.4
		104715	8	1/4	32	17	54	42	12	14	19	19	104715.4
		104716	10	3/8	34	17,5	56,5	44,5	12	17	22	22	104716.4
		104717	12	3/8	38	21,5	59,5	47,5	12	17	24	22	104717.4
		104718	14	1/2	40	22	67,5	53,5	14	19	27	27	104718.4
	400	104719	16	1/2	43	24,5	68,5	54,5	14	24	30	27	104719.4
		104720	20	3/4	48	26,5	80,5	64,5	16	27	36	32	104720.4
		104721	25	1	54	30	90,5	72,5	18	36	46	41	104721.4
		104722	30	1 1/4	62	35,5	98,5	78,5	20	41	50	50	104722.4
	315	104723	38	1 1/2	72	41	111	89	22	50	60	55	104723.4

Note: If you wish to order a fitting in stainless steel, please change the first two digit from **10..** to **11..**

Serie	Bar	Ordering Equipped B3	Ø Tube	M	L1	L2	L3	L4	L5	CH1	CH2	CH3	Ordering Equipped B4
L	315	104804	6	10x1	27	12	42,5	34,5	8	12	14	14	104804.4
		104805	8	12x1,5	29	14	49	37	12	12	17	17	104805.4
		104806	10	14x1,5	30	15	51,5	39,5	12	14	19	19	104806.4
		104807	12	16x1,5	32	17	53,5	41,5	12	17	22	22	104807.4
		104808	15	18x1,5	36	21	57,5	45,5	12	19	27	24	104808.4
		104809	18	22x1,5	40	23,5	63,5	49,5	14	24	32	27	104809.4
	160	104810	22	26x1,5	44	27,5	70,5	54,5	16	27	36	32	104810.4
		104811	28	33x2	47	30,5	77	59	18	36	41	41	104811.4
		104812	35	42x2	56	34,5	88,5	68,5	20	41	50	50	104812.4
		104813	42	48x2	63	40	97	75	22	50	60	55	104813.4
S	630	104814	6	12x1,5	31	16	52	40	12	12	17	17	104814.4
		104815	8	14x1,5	32	17	54	42	12	14	19	19	104815.4
		104816	10	16x1,5	34	17,5	56,5	44,5	12	17	22	22	104816.4
		104817	12	18x1,5	38	21,5	59,5	47,5	12	17	24	24	104817.4
		104818	14	20x1,5	40	22	67,5	53,5	14	19	27	27	104818.4
	400	104819	16	22x1,5	43	24,5	68,5	54,5	14	24	30	27	104819.4
		104820	20	27x2	48	26,5	80,5	64,5	16	27	36	32	104820.4
		104821	25	33x2	54	30	90,5	72,5	18	36	46	41	104821.4
		104822	30	42x2	62	35,5	98,5	78,5	20	41	50	50	104822.4
	315	104823	38	48x2	72	41	111	89	22	50	60	55	104823.4

Note: If you wish to order a fitting in stainless steel, please change the first two digit from **10..** to **11..**

BULKHEAD CONNECTION WITH ELASTOMER SEAL
Thread BSP Parallel

Type: **1049…1** Only Body

Type: **1049..** B3 Ring

Type: **1049…4** B4 Ring

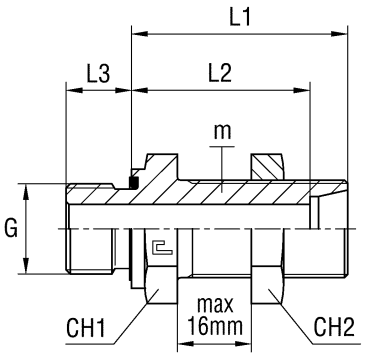

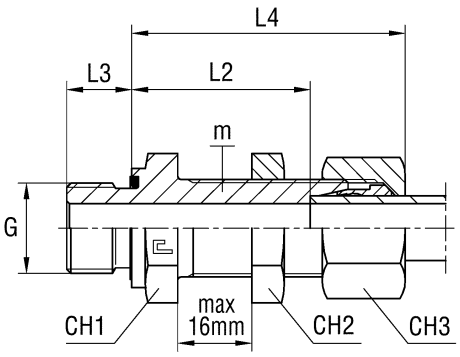

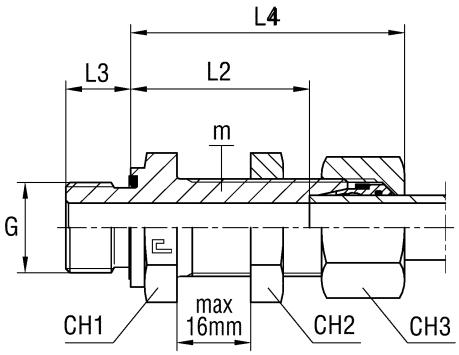

Serie	Bar	Ordering Body	Ordering Equipped B3	Ø Tube	m	G	L1	L2	L3	L4	CH1	CH2	CH3	Ordering Equipped B4
L	315	104904.1	104904	6	12x1,5	1/8	39,5	32,5	8	47,5	17	17	14	104904.4
		104905.1	104905	8	14x1,5	1/4	41	34	12	49	19	19	17	104905.4
		104906.1	104906	10	16x1,5	1/4	43	36	12	51	22	22	19	104906.4
		104907.1	104907	12	18x1,5	3/8	44,5	37,5	12	52,5	24	24	22	104907.4
		104908.1	104908	15	22x1,5	1/2	48	41	14	56	27	30	27	104908.4
		104909.1	104909	18	26x1,5	1/2	52	44,5	14	61	32	36	32	104909.4
	160	104910.1	104910	22	30x2	3/4	55	47,5	16	64	36	41	36	104910.4
		104911.1	104911	28	36x2	1	58	50,5	18	67	41	46	41	104911.4
		104912.1	104912	35	45x2	1 1/4	63	52,5	20	74	50	55	50	104912.4
		104913.1	104913	42	52x2	1 1/2	64	53	22	76	60	65	60	104913.4
S	630	104914.1	104914	6	14x1,5	1/4	45	38	12	53	19	19	17	104914.4
		104915.1	104915	8	16x1,5	1/4	46	39	12	54	22	22	19	104915.4
		104916.1	104916	10	18x1,5	3/8	49	41,5	12	58	24	24	22	104916.4
		104917.1	104917	12	20x1,5	3/8	50	42,5	12	59	27	27	24	104917.4
		104918.1	104918	14	22x1,5	1/2	54	46	14	64	30	30	27	104918.4
	400	104919.1	104919	16	24x1,5	1/2	54	45,5	14	64	32	32	30	104919.4
		104920.1	104920	20	30x2	3/4	59	48,5	16	72	41	41	36	104920.4
		104921.1	104921	25	36x2	1	64	52	18	76	46	46	46	104921.4
		104922.1	104922	30	42x2	1 1/4	69	55,5	20	82	50	50	50	104922.4
	315	104923.1	104923	38	52x2	1 1/2	72	56	22	87	60	65	60	104923.4

Note: If you wish to order a fitting in stainless steel, please change the first two digit from **10..** to **11..**
Articles not included in ISO 8434-1 norm available on request only

ADJUSTABLE MALE STUD BRANCH TEE

Type: **10NTT..1** Only Body

Type: **10NTT..** B3 Ring

Type: **10NTT...4** B4 Ring

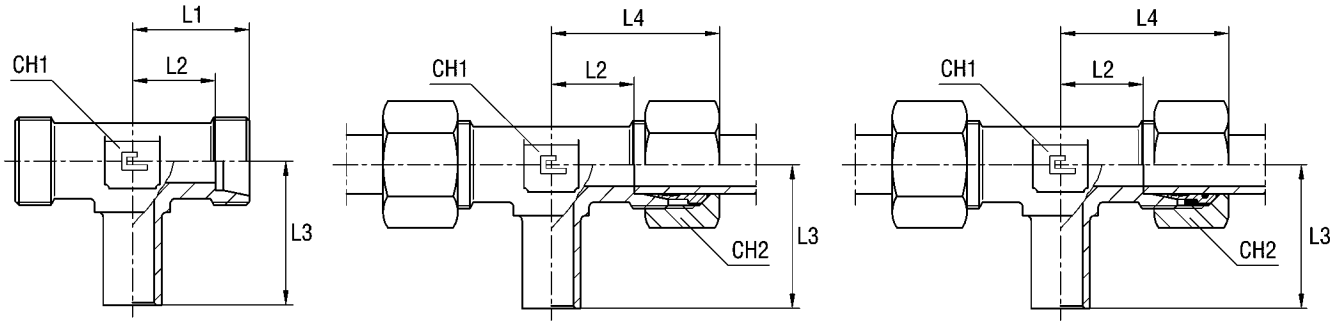

Serie	Bar	Ordering Body	Ordering Assembled B3	Ø Tube	L1	L2	L3	L4	CH1	CH2	Ordering Assembled B4
L	315	10NTT04.1	10NTT04	6	19	12	26	27	12	14	10NTT04.4
		10NTT05.1	10NTT05	8	21	14	27,5	29	12	17	10NTT05.4
		10NTT06.1	10NTT06	10	22	15	29	30	14	19	10NTT06.4
		10NTT07.1	10NTT07	12	24	17	29,5	32	17	22	10NTT07.4
		10NTT08.1	10NTT08	15	28	21	32,5	36	19	27	10NTT08.4
		10NTT09.1	10NTT09	18	31	23,5	35,5	40	24	32	10NTT09.4
	160	10NTT10.1	10NTT10	22	35	27,5	38,5	44	27	36	10NTT10.4
		10NTT11.1	10NTT11	28	38	30,5	41,5	47	36	41	10NTT11.4
		10NTT12.1	10NTT12	35	45	34,5	51	56	41	50	10NTT12.4
		10NTT13.1	10NTT13	42	51	40	56	63	50	60	10NTT13.4
S	630	10NTT14.1	10NTT14	6	23	16	27	31	12	17	10NTT14.4
		10NTT15.1	10NTT15	8	24	17	27,5	32	14	19	10NTT15.4
		10NTT16.1	10NTT16	10	25	17,5	30	34	17	22	10NTT16.4
		10NTT17.1	10NTT17	12	29	21,5	31	38	17	24	10NTT17.4
		10NTT18.1	10NTT18	14	30	22	35	40	19	27	10NTT18.4
	400	10NTT19.1	10NTT19	16	33	24,5	36,5	43	24	30	10NTT19.4
		10NTT20.1	10NTT20	20	37	26,5	44,5	48	27	36	10NTT20.4
		10NTT21.1	10NTT21	25	42	30	50	54	36	46	10NTT21.4
		10NTT22.1	10NTT22	30	49	35,5	55	62	41	50	10NTT22.4
	315	10NTT23.1	10NTT23	38	57	41	63	72	50	60	10NTT23.4

Note: If you wish to order a fitting in stainless steel, please change the first two digit from **10..** to **11..**

ADJUSTABLE MALE STUD BRANCH TEE

Type: **1050…1** B3 Ring

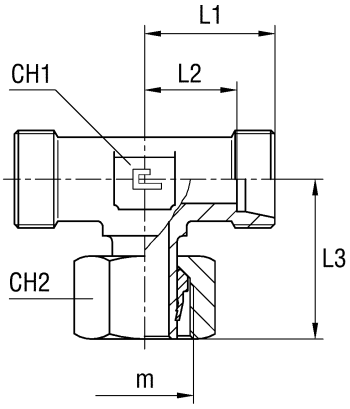

Type: **1050…1.4** B4 Ring

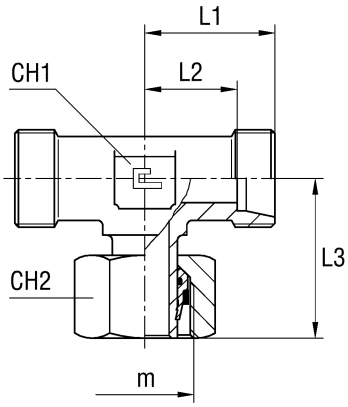

Serie	Bar	Ordering Preassembled B3	Ø Tube	m	L1	L2	L3	CH1	CH2	Ordering Preassembled B4
L	315	105004.1	6	12x1,5	19	12	26	12	14	105004.1.4
		105005.1	8	14x1,5	21	14	27,5	12	17	105005.1.4
		105006.1	10	16x1,5	22	15	29	14	19	105006.1.4
		105007.1	12	18x1,5	24	17	29,5	17	22	105007.1.4
		105008.1	15	22x1,5	28	21	32,5	19	27	105008.1.4
		105009.1	18	26x1,5	31	23,5	32,5	24	32	105009.1.4
	160	105010.1	22	30x2	35	27,5	38,5	27	36	105010.1.4
		105011.1	28	36x2	38	30,5	41,5	36	41	105011.1.4
		105012.1	35	45x2	45	34,5	51	41	50	105012.1.4
		105013.1	42	52x2	51	40	56	50	60	105013.1.4
S	630	105014.1	6	14x1,5	23	16	27	12	17	105014.1.4
		105015.1	8	16x1,5	24	17	27,5	14	19	105015.1.4
		105016.1	10	18x1,5	25	17,5	30	17	22	105016.1.4
		105017.1	12	20x1,5	29	21,5	31	17	24	105017.1.4
		105018.1	14	22x1,5	30	22	35	19	27	105018.1.4
	400	105019.1	16	24x1,5	33	24,5	36,5	24	30	105019.1.4
		105020.1	20	30x2	37	26,5	44,5	27	36	105020.1.4
		105021.1	25	36x2	42	30	50	36	46	105021.1.4
		105022.1	30	42x2	49	35,5	55	41	50	105022.1.4
	315	105023.1	38	52x2	57	41	63	50	60	105023.1.4

Note: If you wish to order a fitting in stainless steel, please change the first two digit from **10..** to **11..**

ADJUSTABLE MALE STUD BRANCH TEE

Type: **1050..** B3 Ring

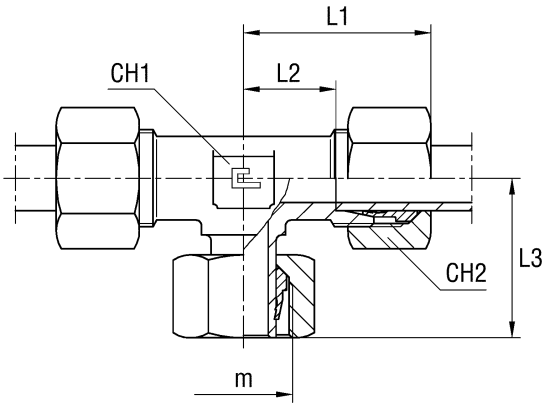

Type: **1050...4** B4 Ring

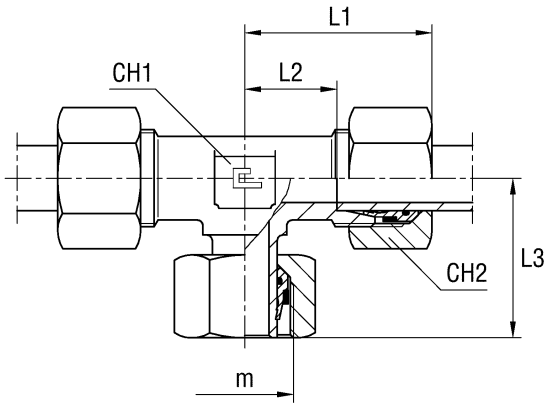

Serie	Bar	Ordering Equipped B3	Ø Tube	m	L1	L2	L3	CH1	CH2	Ordering Equipped B4
L	315	105004	6	12x1,5	27	12	26	12	14	105004.4
		105005	8	14x1,5	29	14	27,5	12	17	105005.4
		105006	10	16x1,5	30	15	29	14	19	105006.4
		105007	12	18x1,5	32	17	29,5	17	22	105007.4
		105008	15	22x1,5	36	21	32,5	19	27	105008.4
		105009	18	26x1,5	40	23,5	35,5	24	32	105009.4
	160	105010	22	30x2	44	27,5	38,5	27	36	105010.4
		105011	28	36x2	47	30,5	41,5	36	41	105011.4
		105012	35	45x2	56	34,5	51	41	50	105012.4
		105013	42	52x2	63	40	56	50	60	105013.4
S	630	105014	6	14x1,5	31	16	27	12	17	105014.4
		105015	8	16x1,5	32	17	27,5	14	19	105015.4
		105016	10	18x1,5	34	17,5	30	17	22	105016.4
		105017	12	20x1,5	38	21,5	31	17	24	105017.4
		105018	14	22x1,5	40	22	35	19	27	105018.4
	400	105019	16	24x1,5	43	24,5	36,5	24	30	105019.4
		105020	20	30x2	48	26,5	44,5	27	36	105020.4
		105021	25	36x2	54	30	50	36	46	105021.4
		105022	30	42x2	62	35,5	55	41	50	105022.4
	315	105023	38	52x2	72	41	63	50	60	105023.4

Note: If you wish to order a fitting in stainless steel, please change the first two digit from **10..** to **11..**

ADJUSTABLE MALE STUD BRANCH TEE WITH MALE STUD
Thread BSP Parallel - Thread Metric Parallel

Type: **1051…1** B3 Ring
Type: **1052…1** B3 Ring

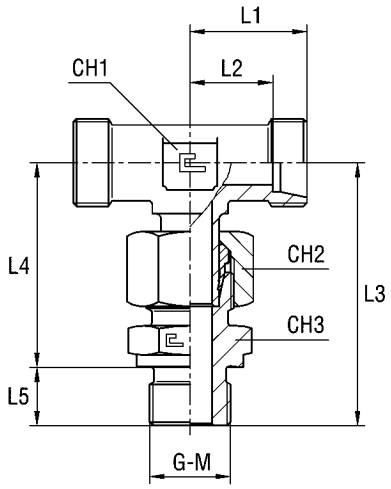

Type: **1051…1.4** B4 Ring
Type: **1052…1.4** B4 Ring

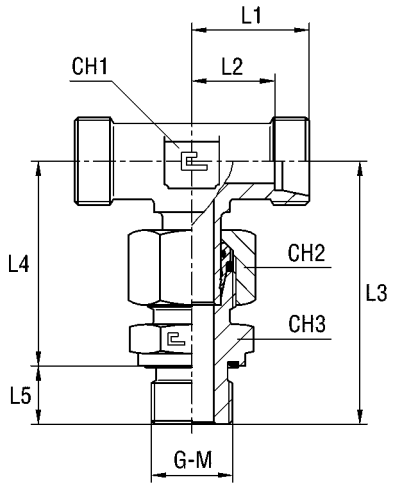

Serie	Bar	Ordering Preassembled B3	Ø Tube	G	L1	L2	L3	L4	L5	CH1	CH2	CH3	Ordering Preassembled B4
L	315	105104.1	6	1/8	19	12	42,5	34,5	8	12	14	14	105104.1.4
		105105.1	8	1/4	21	14	49	37	12	12	17	19	105105.1.4
		105106.1	10	1/4	22	15	51,5	39,5	12	14	19	19	105106.1.4
		105107.1	12	3/8	24	17	53,5	41,5	12	17	22	22	105107.1.4
		105108.1	15	1/2	28	21	60	46	14	19	27	27	105108.1.4
		105109.1	18	1/2	31	23,5	63,5	49,5	14	24	32	27	105109.1.4
	160	105110.1	22	3/4	35	27,5	70,5	54,5	16	27	36	32	105110.1.4
		105111.1	28	1	38	30,5	77	59	18	36	41	41	105111.1.4
		105112.1	35	1 1/4	45	34,5	88,5	68,5	20	41	50	50	105112.1.4
		105113.1	42	1 1/2	51	40	97	75	22	50	60	55	105113.1.4
S	630	105114.1	6	1/4	23	16	52	40	12	12	17	19	105114.1.4
		105115.1	8	1/4	24	17	54	42	12	14	19	19	105115.1.4
		105116.1	10	3/8	25	17,5	56,5	44,5	12	17	22	22	105116.1.4
		105117.1	12	3/8	29	21,5	59,5	47,5	12	17	24	22	105117.1.4
		105118.1	14	1/2	30	22	67,5	53,5	14	19	27	27	105118.1.4
	400	105119.1	16	1/2	33	24,5	68,5	54,5	14	24	30	27	105119.1.4
		105120.1	20	3/4	37	26,5	80,5	64,5	16	27	36	32	105120.1.4
		105121.1	25	1	42	30	90,5	72,5	18	36	46	41	105121.1.4
		105122.1	30	1 1/4	49	35,5	98,5	78	20	41	50	50	105122.1.4
	315	105123.1	38	1 1/2	57	41	111	89	22	50	60	55	105123.1.4

Note: If you wish to order a fitting in stainless steel, please change the first two digit from **10..** to **11..**

Serie	Bar	Ordering Preassembled B3	Ø Tube	M	L1	L2	L3	L4	L5	CH1	CH2	CH3	Ordering Preassembled B4
L	315	105204.1	6	10x1	19	12	42,5	34,5	8	12	14	14	105204.1.4
		105205.1	8	12x1,5	21	14	49	37	12	12	17	17	105205.1.4
		105206.1	10	14x1,5	22	15	51,5	39,5	12	14	19	19	105206.1.4
		105207.1	12	16x1,5	24	17	53,5	41,5	12	17	22	22	105207.1.4
		105208.1	15	18x1,5	28	21	57,5	45,5	12	19	27	24	105208.1.4
		105209.1	18	22x1,5	31	23,5	63,5	49,5	14	24	32	27	105209.1.4
	160	105210.1	22	26x1,5	35	27,5	70,5	54,5	16	27	36	32	105210.1.4
		105211.1	28	33x2	38	30,5	77	59	18	36	41	41	105211.1.4
		105212.1	35	42x2	45	34,5	88,5	68,5	20	41	50	50	105212.1.4
		105213.1	42	48x2	51	40	97	75	22	50	60	55	105213.1.4
S	630	105214.1	6	12x1,5	23	16	52	40	12	12	17	17	105214.1.4
		105215.1	8	14x1,5	24	17	54	42	12	14	19	19	105215.1.4
		105216.1	10	16x1,5	25	17,5	56,5	44,5	12	17	22	22	105216.1.4
		105217.1	12	18x1,5	29	21,5	59,5	47,5	12	17	24	24	105217.1.4
		105218.1	14	20x1,5	30	22	67,5	53,5	14	19	27	27	105218.1.4
	400	105219.1	16	22x1,5	33	24,5	68,5	54,5	14	24	30	27	105219.1.4
		105220.1	20	27x2	37	26,5	80,5	64,5	16	27	36	32	105220.1.4
		105221.1	25	33x2	42	30	90,5	72,5	18	36	46	41	105221.1.4
		105222.1	30	42x2	49	35,5	98,5	78	20	41	50	50	105222.1.4
	315	105223.1	38	48x2	57	41	111	89	22	50	60	55	105223.1.4

Note: If you wish to order a fitting in stainless steel, please change the first two digit from **10..** to **11..**

ADJUSTABLE MALE STUD BRANCH TEE WITH MALE STUD
Thread BSP Parallel - Thread Metric Parallel

Type: **1051..** B3 Ring
Type: **1052..** B3 Ring

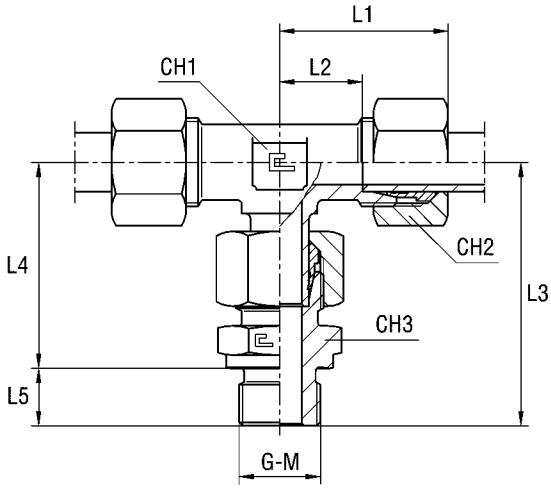

Type: **1051...4** B4 Ring
Type: **1052...4** B4 Ring

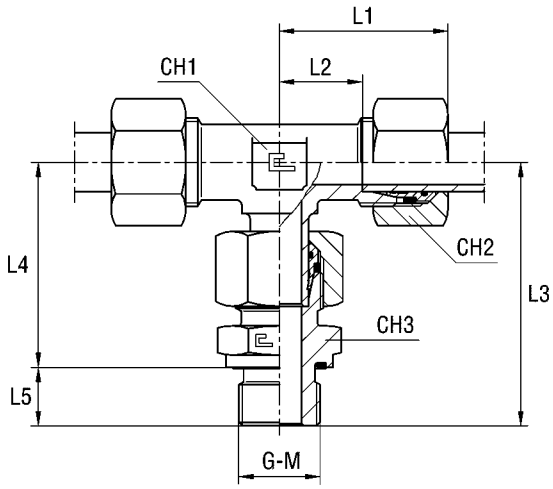

Serie	Bar	Ordering Equipped B3	Ø Tube	G	L1	L2	L3	L4	L5	CH1	CH2	CH3	Ordering Equipped B4
L	315	105104	6	1/8	27	12	42,5	34,5	8	12	14	14	105104.4
		105105	8	1/4	29	14	49	37	12	12	17	19	105105.4
		105106	10	1/4	30	15	51,5	39,5	12	14	19	19	105106.4
		105107	12	3/8	32	17	53,5	41,5	12	17	22	22	105107.4
		105108	15	1/2	36	21	60	46	14	19	27	27	105108.4
		105109	18	1/2	40	23,5	63,5	49,5	14	24	32	27	105109.4
	160	105110	22	3/4	44	27,5	70,5	54,5	16	27	36	32	105110.4
		105111	28	1	47	30,5	77	59	18	36	41	41	105111.4
		105112	35	1 1/4	56	34,5	88,5	68,5	20	41	50	50	105112.4
		105113	42	1 1/2	63	40	97	75	22	50	60	55	105113.4
S	630	105114	6	1/4	31	16	52	40	12	12	17	19	105114.4
		105115	8	1/4	32	17	54	42	12	14	19	19	105115.4
		105116	10	3/8	34	17,5	56,5	44,5	12	17	22	22	105116.4
		105117	12	3/8	38	21,5	59,5	47,5	12	17	24	22	105117.4
		105118	14	1/2	40	22	67,5	53,5	14	19	27	27	105118.4
	400	105119	16	1/2	43	24,5	68,5	54,5	14	24	30	27	105119.4
		105120	20	3/4	48	26,5	80,5	64,5	16	27	36	32	105120.4
		105121	25	1	54	30	90,5	72,5	18	36	46	41	105121.4
		105122	30	1 1/4	62	35,5	98,5	78	20	41	50	50	105122.4
	315	105123	38	1 1/2	72	41	111	89	22	50	60	55	105123.4

Note: If you wish to order a fitting in stainless steel, please change the first two digit from **10..** to **11..**

Serie	Bar	Ordering Equipped B3	Ø Tube	M	L1	L2	L3	L4	L5	CH1	CH2	CH3	Ordering Equipped B4
L	315	105204	6	10x1	27	12	42,5	34,5	8	12	14	14	105204.4
		105205	8	12x1,5	29	14	49	37	12	12	17	17	105205.4
		105206	10	14x1,5	30	15	51,5	39,5	12	14	19	19	105206.4
		105207	12	16x1,5	32	17	53,5	41,5	12	17	22	22	105207.4
		105208	15	18x1,5	36	21	57,5	45,5	12	19	27	24	105208.4
		105209	18	22x1,5	40	23,5	63,5	49,5	14	24	32	27	105209.4
	160	105210	22	26x1,5	44	27,5	70,5	54,5	16	27	36	32	105210.4
		105211	28	33x2	47	30,5	77	59	18	36	41	41	105211.4
		105212	35	42x2	56	34,5	88,5	68,5	20	41	50	50	105212.4
		105213	42	48x2	63	40	97	75	22	50	60	55	105213.4
S	630	105214	6	12x1,5	31	16	52	40	12	12	17	17	105214.4
		105215	8	14x1,5	32	17	54	42	12	14	19	19	105215.4
		105216	10	16x1,5	34	17,5	56,5	44,5	12	17	22	22	105216.4
		105217	12	18x1,5	38	21,5	59,5	47,5	12	17	24	24	105217.4
		105218	14	20x1,5	40	22	67,5	53,5	14	19	27	27	105218.4
	400	105219	16	22x1,5	43	24,5	68,5	54,5	14	24	30	27	105219.4
		105220	20	27x2	48	26,5	80,5	64,5	16	27	36	32	105220.4
		105221	25	33x2	54	30	90,5	72,5	18	36	46	41	105221.4
		105222	30	42x2	62	35,5	98,5	78	20	41	50	50	105222.4
	315	105223	38	48x2	72	41	111	89	22	50	60	55	105223.4

Note: If you wish to order a fitting in stainless steel, please change the first two digit from **10..** to **11..**

REDUCING STANDPIPE L SERIES

Type: **10H..L.1** Only Body

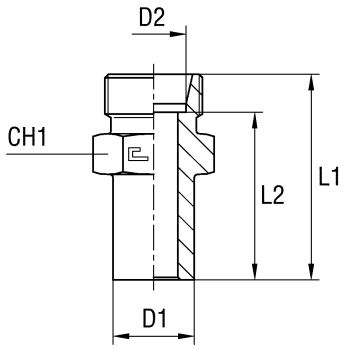

Type: **10H..L** B3 Ring

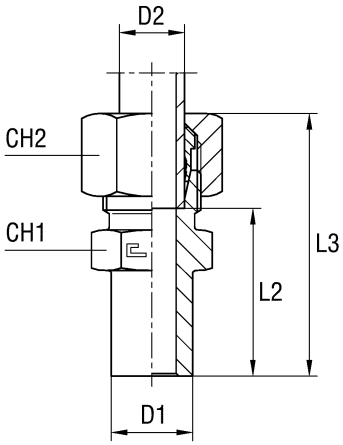

Type: **10H..L.4** B4 Ring

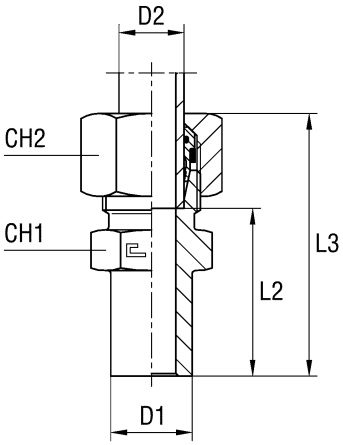

Serie	Bar	Ordering Body	Ordering Assembled B3	D1	D2	L1	L2	L3	CH1	CH2	Ordering Assembled B4
L	315	10H01L.1	10H01L	8	6	32,5	25,5	40	12	14	10H01L.4
		10H02L.1	10H02L	10	6	33	26	40,5	12	14	10H02L.4
		10H03L.1	10H03L	12	6	34	27	41,5	14	14	10H03L.4
		10H04L.1	10H04L	15	6	34	27	41,5	17	14	10H04L.4
		10H05L.1	10H05L	18	6	36,5	29,5	44	19	14	10H05L.4
	160	10H06L.1	10H06L	22	6	37,5	30,5	45	24	14	10H06L.4
		10H07L.1	10H07L	28	6	39	32	46,5	30	14	10H07L.4
		10H08L.1	10H08L	35	6	45,5	38,5	53	36	14	10H08L.4
		10H09L.1	10H09L	42	6	46,5	39,5	54	46	14	10H09L.4
	315	10H10L.1	10H10L	10	8	34	27	42	14	17	10H10L.4
		10H11L.1	10H11L	12	8	34	27	42	14	17	10H11L.4
		10H12L.1	10H12L	15	8	34	27	42	17	17	10H12L.4
		10H13L.1	10H13L	18	8	36,5	29,5	44,5	19	17	10H13L.4
	160	10H14L.1	10H14L	22	8	37,5	30,5	45,5	24	17	10H14L.4
		10H15L.1	10H15L	28	8	39	32	47	30	17	10H15L.4
		10H16L.1	10H16L	35	8	45,5	38,5	53,5	36	17	10H16L.4
		10H17L.1	10H17L	42	8	46,5	39,5	54,5	46	17	10H17L.4
	315	10H18L.1	10H18L	12	10	35	28	43	17	19	10H18L.4
		10H19L.1	10H19L	15	10	35	28	43	17	19	10H19L.4
		10H20L.1	10H20L	18	10	37,5	30,5	45,5	19	19	10H20L.4
	160	10H21L.1	10H21L	22	10	38,5	31,5	46,5	24	19	10H21L.4
		10H22L.1	10H22L	28	10	40	33	48	30	19	10H22L.4
		10H23L.1	10H23L	35	10	46,5	39,5	54,5	36	19	10H23L.4
		10H24L.1	10H24L	42	10	47,5	40,5	55,5	46	19	10H24L.4
	315	10H25L.1	10H25L	15	12	36	29	43,5	19	22	10H25L.4
		10H26L.1	10H26L	18	12	37,5	30,5	45	19	22	10H26L.4
	160	10H27L.1	10H27L	22	12	38,5	31,5	46	24	22	10H27L.4
		10H28L.1	10H28L	28	12	40	33	47,5	30	22	10H28L.4
		10H29L.1	10H29L	35	12	46,5	39,5	54	36	22	10H29L.4
		10H30L.1	10H30L	42	12	47,5	40,5	55	46	22	10H30L.4
	315	10H31L.1	10H31L	18	15	38,5	31,5	46,5	24	27	10H31L.4
	160	10H32L.1	10H32L	22	15	39,5	32,5	47,5	24	27	10H32L.4
		10H33L.1	10H33L	28	15	41	34	49	30	27	10H33L.4
		10H34L.1	10H34L	35	15	47,5	40,5	55,5	36	27	10H34L.4
		10H35L.1	10H35L	42	15	48,5	41,5	56,5	46	27	10H35L.4
		10H36L.1	10H36L	22	18	40	32,5	49	27	32	10H36L.4
		10H37L.1	10H37L	28	18	41	33,5	50	30	32	10H37L.4
		10H38L.1	10H38L	35	18	47,5	40	56,5	36	32	10H38L.4
		10H39L.1	10H39L	42	18	48,5	41	57,5	46	32	10H39L.4
		10H40L.1	10H40L	28	22	43	35,5	52	32	36	10H40L.4
		10H41L.1	10H41L	35	22	49,5	42	58,5	36	36	10H41L.4
		10H42L.1	10H42L	42	22	50,5	43	59,5	46	36	10H42L.4
		10H43L.1	10H43L	35	28	49,5	42	58,5	41	41	10H43L.4
		10H44L.1	10H44L	42	28	50,5	43	59,5	46	41	10H44L.4
		10H45L.1	10H45L	42	35	52,5	42	63,5	46	50	10H45L.4

Note: If you wish to order a fitting in stainless steel, please change the first two digit from **10..** to **11..**

REDUCING STANDPIPE L SERIES

Type: **1053…1** B3 Ring

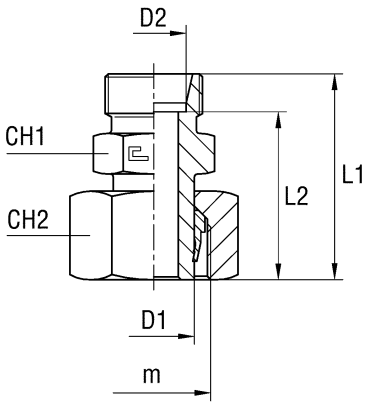

Type: **1053…1.4** B4 Ring

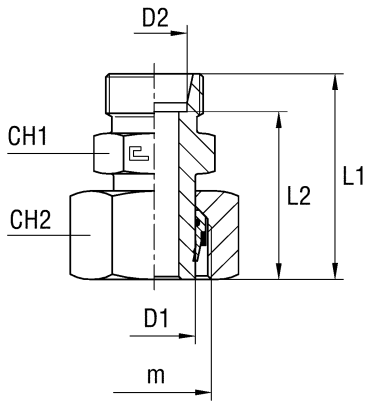

Serie	Bar	Ordering Preassembled B3	D1	D2	m	L1	L2	CH1	CH2	Ordering Preassembled B4
L	315	105301.1	8	6	14x1,5	32,5	25,5	12	17	105301.1.4
		105302.1	10	6	16x1,5	33	26	12	19	105302.1.4
		105303.1	12	6	18x1,5	34	27	14	22	105303.1.4
		105304.1	15	6	22x1,5	34	27	17	27	105304.1.4
		105305.1	18	6	26x1,5	36,5	29,5	19	32	105305.1.4
	160	105306.1	22	6	30x2	37,5	30,5	24	36	105306.1.4
		105307.1	28	6	36x2	39	32	30	41	105307.1.4
		105308.1	35	6	45x2	45,5	38,5	36	50	105308.1.4
		105309.1	42	6	52x2	46,5	39,5	46	60	105309.1.4
	315	105310.1	10	8	16x1,5	34	27	14	19	105310.1.4
		105311.1	12	8	18x1,5	34	27	14	22	105311.1.4
		105312.1	15	8	22x1,5	34	27	17	27	105312.1.4
		105313.1	18	8	26x1,5	36,5	29,5	19	32	105313.1.4
	160	105314.1	22	8	30x2	37,5	30,5	24	36	105314.1.4
		105315.1	28	8	36x2	39	32	30	41	105315.1.4
		105316.1	35	8	45x2	45,5	38,5	36	50	105316.1.4
		105317.1	42	8	52x2	46,5	39,5	46	60	105317.1.4
	315	105318.1	12	10	18x1,5	35	28	17	22	105318.1.4
		105319.1	15	10	22x1,5	35	28	17	27	105319.1.4
		105320.1	18	10	26x1,5	37,5	30,5	19	32	105320.1.4
	160	105321.1	22	10	30x2	38,5	31,5	24	36	105321.1.4
		105322.1	28	10	36x2	40	33	30	41	105322.1.4
		105323.1	35	10	45x2	46,5	39,5	36	50	105323.1.4
		105324.1	42	10	52x2	47,5	40,5	46	60	105324.1.4
	315	105325.1	15	12	22x1,5	36	29	19	27	105325.1.4
		105326.1	18	12	26x1,5	37,5	30,5	19	32	105326.1.4
	160	105327.1	22	12	30x2	38,5	31,5	24	36	105327.1.4
		105328.1	28	12	36x2	40	33	30	41	105328.1.4
		105329.1	35	12	45x2	46,5	39,5	36	50	105329.1.4
		105330.1	42	12	52x2	47,5	40,5	46	60	105330.1.4
	315	105331.1	18	15	26x1,5	38,5	31,5	24	32	105331.1.4
	160	105332.1	22	15	30x2	39,5	32,5	24	36	105332.1.4
		105333.1	28	15	36x2	41	34	30	41	105333.1.4
		105334.1	35	15	45x2	47,5	40,5	36	50	105334.1.4
		105335.1	42	15	52x2	48,5	41,5	46	60	105335.1.4
		105336.1	22	18	30x2	40	32,5	27	36	105336.1.4
		105337.1	28	18	36x2	41	33,5	30	41	105337.1.4
		105338.1	35	18	45x2	47,5	40	36	50	105338.1.4
		105339.1	42	18	52x2	48,5	41	46	60	105339.1.4
		105340.1	28	22	36x2	43	35,5	32	41	105340.1.4
		105341.1	35	22	45x2	49,5	42	36	50	105341.1.4
		105342.1	42	22	52x2	50,5	43	46	60	105342.1.4
		105343.1	35	28	45x2	49,5	42	41	50	105343.1.4
		105344.1	42	28	52x2	50,5	43	46	60	105344.1.4
		105345.1	42	35	52x2	52,5	42	46	60	105345.1.4

Note: If you wish to order a fitting in stainless steel, please change the first two digit from **10..** to **11..**

REDUCING STANDPIPE L SERIES

Type: **1053..** B3 Ring

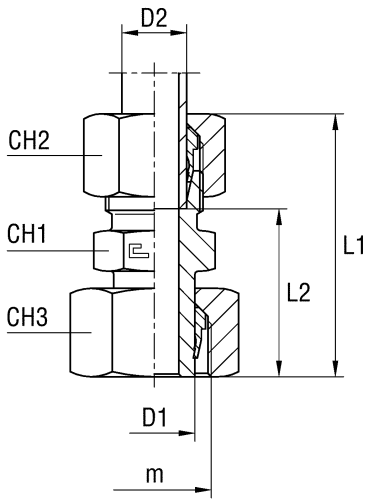

Type: **1053...4** B4 Ring

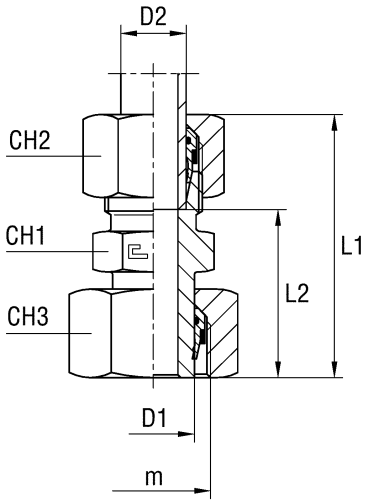

Serie	Bar	Ordering Equipped B3	D1	D2	m	L1	L2	CH1	CH2	CH3	Ordering Equipped B4
L	315	105301	8	6	14x1,5	40	25,5	12	14	17	105301.4
		105302	10	6	16x1,5	40,5	26	12	14	19	105302.4
		105303	12	6	18x1,5	41,5	27	14	14	22	105303.4
		105304	15	6	22x1,5	41,5	27	17	14	27	105304.4
		105305	18	6	26x1,5	44	29,5	19	14	32	105305.4
	160	105306	22	6	30x2	45	30,5	24	14	36	105306.4
		105307	28	6	36x2	46,5	32	30	14	41	105307.4
		105308	35	6	45x2	53	38,5	36	14	50	105308.4
		105309	42	6	52x2	54	39,5	46	14	60	105309.4
	315	105310	10	8	16x1,5	42	27	14	17	19	105310.4
		105311	12	8	18x1,5	42	27	14	17	22	105311.4
		105312	15	8	22x1,5	42	27	17	17	27	105312.4
		105313	18	8	26x1,5	44,5	29,5	19	17	32	105313.4
	160	105314	22	8	30x2	45,5	30,5	24	17	36	105314.4
		105315	28	8	36x2	47	32	30	17	41	105315.4
		105316	35	8	45x2	53,5	38,5	36	17	50	105316.4
		105317	42	8	52x2	54,5	39,5	46	17	60	105317.4
	315	105318	12	10	18x1,5	43	28	17	19	22	105318.4
		105319	15	10	22x1,5	43	28	17	19	27	105319.4
		105320	18	10	26x1,5	45,5	30,5	19	19	32	105320.4
	160	105321	22	10	30x2	46,5	31,5	24	19	36	105321.4
		105322	28	10	36x2	48	33	30	19	41	105322.4
		105323	35	10	45x2	54,5	39,5	36	19	50	105323.4
		105324	42	10	52x2	55,5	40,5	46	19	60	105324.4
	315	105325	15	12	22x1,5	43,5	29	19	22	27	105325.4
		105326	18	12	26x1,5	45	30,5	19	22	32	105326.4
	160	105327	22	12	30x2	46	31,5	24	22	36	105327.4
		105328	28	12	36x2	47,5	33	30	22	41	105328.4
		105329	35	12	45x2	54	39,5	36	22	50	105329.4
		105330	42	12	52x2	55	40,5	46	22	60	105330.4
	315	105331	18	15	26x1,5	46,5	31,5	24	27	32	105331.4
	160	105332	22	15	30x2	47,5	32,5	24	27	36	105332.4
		105333	28	15	36x2	49	34	30	27	41	105333.4
		105334	35	15	45x2	55,5	40,5	36	27	50	105334.4
		105335	42	15	52x2	56,5	41,5	46	27	60	105335.4
		105336	22	18	30x2	49	32,5	27	32	36	105336.4
		105337	28	18	36x2	50	33,5	30	32	41	105337.4
		105338	35	18	45x2	56,5	40	36	32	50	105338.4
		105339	42	18	52x2	57,5	41	46	32	60	105339.4
		105340	28	22	36x2	52	35,5	32	36	41	105340.4
		105341	35	22	45x2	58,5	42	36	36	50	105341.4
		105342	42	22	52x2	59,5	43	46	36	60	105342.4
		105343	35	28	45x2	58,5	42	41	41	50	105343.4
		105344	42	28	52x2	59,5	43	46	41	60	105344.4
		105345	42	35	52x2	63,5	42	46	50	60	105345.4

Note: If you wish to order a fitting in stainless steel, please change the first two digit from **10..** to **11..**

REDUCING STANDPIPE S SERIES

Type: **10H..S.1** Only Body

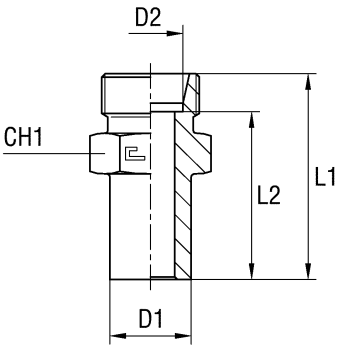

Type: **10H..S** B3 Ring

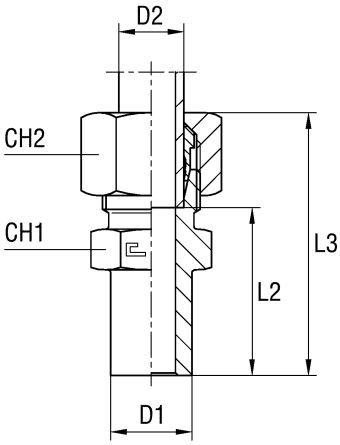

Type: **10H..S.4** B4 Ring

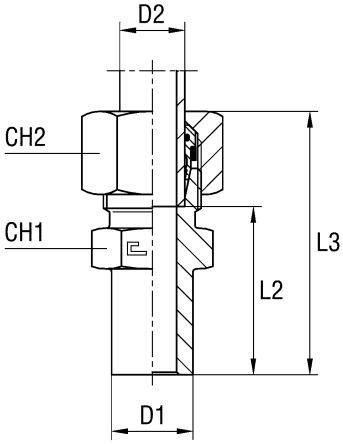

Serie	Bar	Ordering Body	Ordering Assembled B3	D1	D2	L1	L2	L3	CH1	CH2	Ordering Assembled B4
S	630	10H01S.1	10H01S	8	6	36	29	44	14	17	10H01S.4
		10H02S.1	10H02S	10	6	38,5	31,5	46,5	14	17	10H02S.4
		10H03S.1	10H03S	12	6	38	31	46	14	17	10H03S.4
		10H04S.1	10H04S	14	6	42	35	50	17	17	10H04S.4
	400	10H05S.1	10H05S	16	6	43	36	51	17	17	10H05S.4
		10H06S.1	10H06S	20	6	48,5	41,5	56,5	22	17	10H06S.4
		10H07S.1	10H07S	25	6	51	44	59	27	17	10H07S.4
		10H08S.1	10H08S	30	6	55,5	48,5	63,5	32	17	10H08S.4
	315	10H09S.1	10H09S	38	6	61,5	54	69,5	41	17	10H09S.4
	630	10H10S.1	10H10S	10	8	40,5	33,5	48,5	17	19	10H10S.4
		10H11S.1	10H11S	12	8	40	33	48	17	19	10H11S.4
		10H12S.1	10H12S	14	8	42	35	50	17	19	10H12S.4
	400	10H13S.1	10H13S	16	8	43	36	51	17	19	10H13S.4
		10H14S.1	10H14S	20	8	48,5	41	56,5	22	19	10H14S.4
		10H15S.1	10H15S	25	8	51	44	59	27	19	10H15S.4
		10H16S.1	10H16S	30	8	55,5	48,5	63,5	32	19	10H16S.4
	315	10H17S.1	10H17S	38	8	61,5	54,5	69,5	41	19	10H17S.4
	630	10H18S.1	10H18S	12	10	40	32,5	48,5	19	22	10H18S.4
		10H19S.1	10H19S	14	10	42	34,5	50,5	19	22	10H19S.4
	400	10H20S.1	10H20S	16	10	43	35,5	51,5	19	22	10H20S.4
		10H21S.1	10H21S	20	10	48,5	41	57	22	22	10H21S.4
		10H22S.1	10H22S	25	10	51	43,5	59,5	27	22	10H22S.4
	250	10H23S.1	10H23S	30	10	55,5	48	64	32	22	10H23S.4
		10H24S.1	10H24S	38	10	61,5	54	70	41	22	10H24S.4
	630	10H25S.1	10H25S	14	12	44	36,5	52,5	22	24	10H25S.4
	400	10H26S.1	10H26S	16	12	45	37,5	53,5	22	24	10H26S.4
		10H27S.1	10H27S	20	12	48,5	41	57	22	24	10H27S.4
		10H28S.1	10H28S	25	12	51	43,5	59,5	27	24	10H28S.4
		10H29S.1	10H29S	30	12	55,5	48	64	32	24	10H29S.4
	315	10H30S.1	10H30S	38	12	61,5	54	70	41	24	10H30S.4
	400	10H31S.1	10H31S	16	14	47	39	57	24	27	10H31S.4
		10H32S.1	10H32S	20	14	50,5	42,5	60,5	24	27	10H32S.4
		10H33S.1	10H33S	25	14	53	45	63	27	27	10H33S.4
	250	10H34S.1	10H34S	30	14	57,5	49,5	67,5	32	27	10H34S.4
		10H35S.1	10H35S	38	14	63,5	55,5	73,5	41	27	10H35S.4
	400	10H36S.1	10H36S	20	16	50,5	42	60,5	27	30	10H36S.4
		10H37S.1	10H37S	25	16	53	44,5	63	27	30	10H37S.4
		10H38S.1	10H38S	30	16	57,5	49	67,5	32	30	10H38S.4
	315	10H39S.1	10H39S	38	16	63,5	55	73,5	41	30	10H39S.4
	400	10H40S.1	10H40S	25	20	57	46,5	68	32	36	10H40S.4
		10H41S.1	10H41S	30	20	59,5	49	70,5	32	36	10H41S.4
		10H42S.1	10H42S	38	20	65,5	55	76,5	41	36	10H42S.4
		10H43S.1	10H43S	30	25	63,5	51,5	75,5	41	46	10H43S.4
	315	10H44S.1	10H44S	38	25	67,5	55,5	79,5	41	46	10H44S.4
		10H45S.1	10H45S	38	30	69,5	56	82,5	46	50	10H45S.4

Note: If you wish to order a fitting in stainless steel, please change the first two digit from **10..** to **11..**

REDUCING STANDPIPE S SERIES

Type: **1054…1** B3 Ring

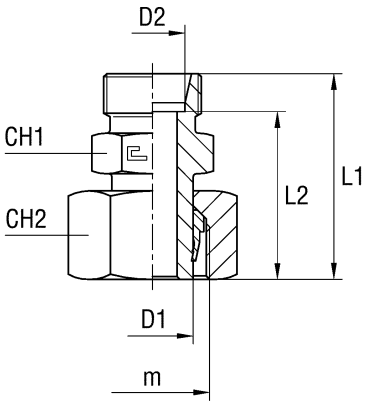

Type: **1054…1.4** B4 Ring

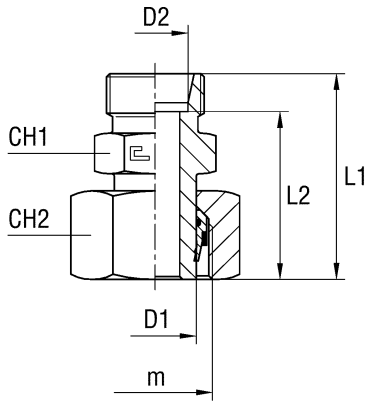

Serie	Bar	Ordering Preassembled B3	D1	D2	m	L1	L2	CH1	CH2	Ordering Preassembled B4
S	630	105401.1	8	6	16x1,5	36	29	14	19	105401.1.4
		105402.1	10	6	18x1,5	38,5	31,5	14	22	105402.1.4
		105403.1	12	6	20x1,5	38	31	14	24	105403.1.4
		105404.1	14	6	22x1,5	42	35	17	27	105404.1.4
	400	105405.1	16	6	24x1,5	43	36	17	30	105405.1.4
		105406.1	20	6	30x2	48,5	41,5	22	36	105406.1.4
		105407.1	25	6	36x2	51	44	27	46	105407.1.4
		105408.1	30	6	42x2	55,5	48,5	32	50	105408.1.4
	315	105409.1	38	6	52x2	61,5	54	41	60	105409.1.4
	630	105410.1	10	8	18x1,5	40,5	33,5	17	22	105410.1.4
		105411.1	12	8	20x1,5	40	33	17	24	105411.1.4
		105412.1	14	8	22x1,5	42	35	17	27	105412.1.4
	400	105413.1	16	8	24x1,5	43	36	17	30	105413.1.4
		105414.1	20	8	30x2	48,5	41	22	36	105414.1.4
		105415.1	25	8	36x2	51	44	27	46	105415.1.4
		105416.1	30	8	42x2	55,5	48,5	32	50	105416.1.4
	315	105417.1	38	8	52x2	61,5	54,5	41	60	105417.1.4
	630	105418.1	12	10	20x1,5	40	32,5	19	24	105418.1.4
		105419.1	14	10	22x1,5	42	34,5	19	27	105419.1.4
	400	105420.1	16	10	24x1,5	43	35,5	19	30	105420.1.4
		105421.1	20	10	30x2	48,5	41	22	36	105421.1.4
		105422.1	25	10	36x2	51	43,5	27	46	105422.1.4
	250	105423.1	30	10	42x2	55,5	48	32	50	105423.1.4
		105424.1	38	10	52x2	61,5	54	41	60	105424.1.4
	630	105425.1	14	12	22x1,5	44	36,5	22	27	105425.1.4
	400	105426.1	16	12	24x1,5	45	37,5	22	30	105426.1.4
		105427.1	20	12	30x2	48,5	41	22	36	105427.1.4
		105428.1	25	12	36x2	51	43,5	27	46	105428.1.4
		105429.1	30	12	42x2	55,5	48	32	50	105429.1.4
	315	105430.1	38	12	52x2	61,5	54	41	60	105430.1.4
	400	105431.1	16	14	24x1,5	47	39	24	30	105431.1.4
		105432.1	20	14	30x2	50,5	42,5	24	36	105432.1.4
		105433.1	25	14	36x2	53	45	27	46	105433.1.4
	250	105434.1	30	14	42x2	57,5	49,5	32	50	105434.1.4
		105435.1	38	14	52x2	63,5	55,5	41	60	105435.1.4
	400	105436.1	20	16	30x2	50,5	42	27	36	105436.1.4
		105437.1	25	16	36x2	53	44,5	27	46	105437.1.4
		105438.1	30	16	42x2	57,5	49	32	50	105438.1.4
	315	105439.1	38	16	52x2	63,5	55	41	60	105439.1.4
	400	105440.1	25	20	36x2	57	46,5	32	46	105440.1.4
		105441.1	30	20	42x2	59,5	49	32	50	105441.1.4
		105442.1	38	20	52x2	65,5	55	41	60	105442.1.4
		105443.1	30	25	42x2	63,5	51,5	41	50	105443.1.4
	315	105444.1	38	25	52x2	67,5	55,5	41	60	105444.1.4
		105445.1	38	30	52x2	69,5	56	46	60	105445.1.4

Note: If you wish to order a fitting in stainless steel, please change the first two digit from **10..** to **11..**

REDUCING STANDPIPE S SERIES

Type: **1054..** B3 Ring

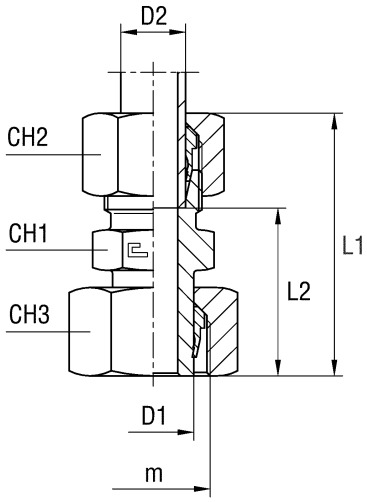

Type: **1054...4** B4 Ring

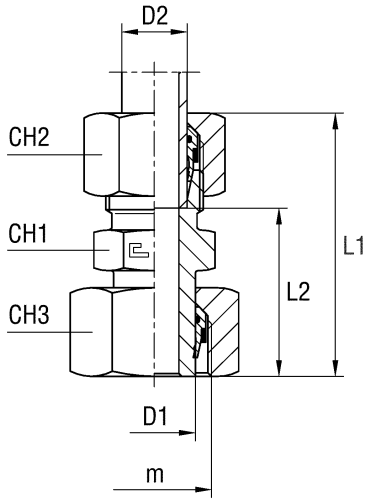

Serie	Bar	Ordering Equipped B3	D1	D2	m	L1	L2	CH1	CH2	CH3	Ordering Equipped B4
S	630	105401	8	6	16x1,5	44	29	14	17	19	105401.4
		105402	10	6	18x1,5	46,5	31,5	14	17	22	105402.4
		105403	12	6	20x1,5	46	31	14	17	24	105403.4
		105404	14	6	22x1,5	50	35	17	17	27	105404.4
	400	105405	16	6	24x1,5	51	36	17	17	30	105405.4
		105406	20	6	30x2	56,5	41,5	22	17	36	105406.4
		105407	25	6	36x2	59	44	27	17	46	105407.4
		105408	30	6	42x2	63,5	48,5	32	17	50	105408.4
	315	105409	38	6	52x2	69,5	54	41	17	60	105409.4
	630	105410	10	8	18x1,5	48,5	33,5	17	19	22	105410.4
		105411	12	8	20x1,5	48	33	17	19	24	105411.4
		105412	14	8	22x1,5	50	35	17	19	27	105412.4
	400	105413	16	8	24x1,5	51	36	17	19	30	105413.4
		105414	20	8	30x2	56,5	41	22	19	36	105414.4
		105415	25	8	36x2	59	44	27	19	46	105415.4
		105416	30	8	42x2	63,5	48,5	32	19	50	105416.4
	315	105417	38	8	52x2	69,5	54,5	41	19	60	105417.4
	630	105418	12	10	20x1,5	48,5	32,5	19	22	24	105418.4
		105419	14	10	22x1,5	50,5	34,5	19	22	27	105419.4
	400	105420	16	10	24x1,5	51,5	35,5	19	22	30	105420.4
		105421	20	10	30x2	57	41	22	22	36	105421.4
		105422	25	10	36x2	59,5	43,5	27	22	46	105422.4
	250	105423	30	10	42x2	64	48	32	22	50	105423.4
		105424	38	10	52x2	70	54	41	22	60	105424.4
	630	105425	14	12	22x1,5	52,5	36,5	22	24	27	105425.4
	400	105426	16	12	24x1,5	53,5	37,5	22	24	30	105426.4
		105427	20	12	30x2	57	41	22	24	36	105427.4
		105428	25	12	36x2	59,5	43,5	27	24	46	105428.4
		105429	30	12	42x2	64	48	32	24	50	105429.4
	315	105430	38	12	52x2	70	54	41	24	60	105430.4
	400	105431	16	14	24x1,5	57	39	24	27	30	105431.4
		105432	20	14	30x2	60,5	42,5	24	27	36	105432.4
		105433	25	14	36x2	63	45	27	27	46	105433.4
	250	105434	30	14	42x2	67,5	49,5	32	27	50	105434.4
		105435	38	14	52x2	73,5	55,5	41	27	60	105435.4
	400	105436	20	16	30x2	60,5	42	27	30	36	105436.4
		105437	25	16	36x2	63	44,5	27	30	46	105437.4
		105438	30	16	42x2	67,5	49	32	30	50	105438.4
	315	105439	38	16	52x2	73,5	55	41	30	60	105439.4
	400	105440	25	20	36x2	68	46,5	32	36	46	105440.4
		105441	30	20	42x2	70,5	49	32	36	50	105441.4
		105442	38	20	52x2	76,5	55	41	36	60	105442.4
		105443	30	25	42x2	75,5	51,5	41	46	50	105443.4
	315	105444	38	25	52x2	79,5	55,5	41	46	60	105444.4
		105445	38	30	52x2	82,5	56	46	50	60	105445.4

Note: If you wish to order a fitting in stainless steel, please change the first two digit from **10..** to **11..**

WELDING BOSS

Type: **1055..1** Only Body

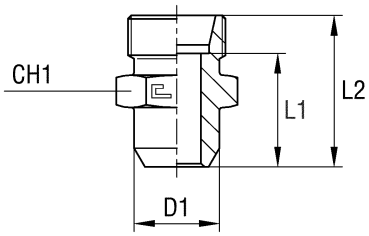

Type: **1055..** B3 Ring

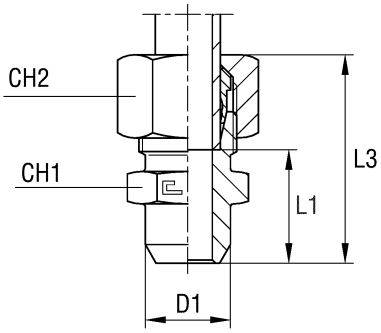

Type: **1055...4** B4 Ring

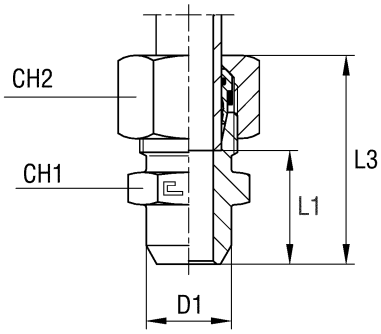

Serie	Bar	Ordering Body	Ordering Equipped B3	Ø Tube	D1	L1	L2	L3	CH1	CH2	Ordering Equipped B4
L	315	105504.1	105504	6	10	14	21	29	12	14	105504.4
		105505.1	105505	8	12	16	23	31	14	17	105505.4
		105506.1	105506	10	14	18	25	33	17	19	105506.4
		105507.1	105507	12	16	18	25	33	19	22	105507.4
		105508.1	105508	15	19	22	29	37	22	27	105508.4
		105509.1	105509	18	22	23,5	31	40	27	32	105509.4
	160	105510.1	105510	22	27	28,5	36	45	32	36	105510.4
		105511.1	105511	28	32	30,5	38	47	41	41	105511.4
		105512.1	105512	35	40	32,5	43	54	46	50	105512.4
		105513.1	105513	42	46	35	46	58	55	60	105513.4
S	630	105514.1	105514	6	11	19	26	34	14	17	105514.4
		105515.1	105515	8	13	21	28	36	17	19	105515.4
		105516.1	105516	10	15	22,5	30	39	19	22	105516.4
		105517.1	105517	12	17	24,5	32	41	22	24	105517.4
		105518.1	105518	14	19	27	35	45	24	27	105518.4
	400	105519.1	105519	16	21	26,5	35	45	27	30	105519.4
		105520.1	105520	20	26	29,5	40	51	32	36	105520.4
		105521.1	105521	25	31	32	44	56	41	46	105521.4
		105522.1	105522	30	36	35,5	49	62	46	50	105522.4
	315	105523.1	105523	38	44	38	54	69	55	60	105523.4

Note: If you wish to order a fitting in stainless steel, please change the first two digit from **10..** to **11..**

WELDING BULKHEAD CONNECTION

Type: **1056..1** Only Body

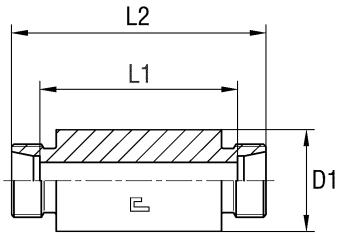

Type: **1056..** B3 Ring

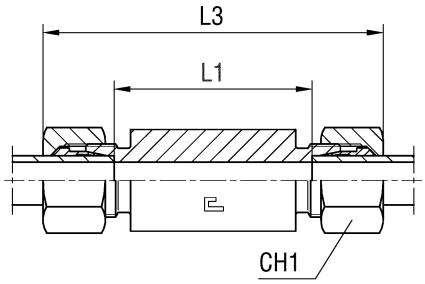

Type: **1056...4** B4 Ring

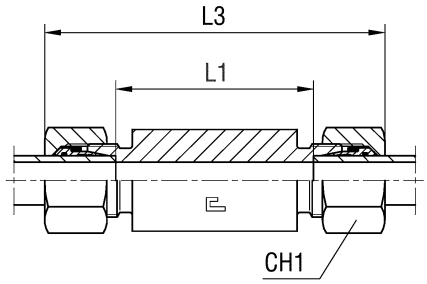

Serie	Bar	Ordering Body	Ordering Equipped B3	Ø Tube	D1	L1	L2	L3	CH1	Ordering Equipped B4
L	315	105604.1	105604	6	18	56	70	85	14	105604.4
		105605.1	105605	8	20	56	70	85	17	105605.4
		105606.1	105606	10	22	58	72	87	19	105606.4
		105607.1	105607	12	25	58	72	87	22	105607.4
		105608.1	105608	15	28	70	84	100	27	105608.4
		105609.1	105609	18	32	69	84	101	32	105609.4
	160	105610.1	105610	22	36	73	88	105	36	105610.4
		105611.1	105611	28	40	73	88	106	41	105611.4
		105612.1	105612	35	50	71	92	114	50	105612.4
		105613.1	105613	42	60	70	92	115	60	105613.4
S	630	105614.1	105614	6	20	60	74	89	17	105614.4
		105615.1	105615	8	22	60	74	89	19	105615.4
		105616.1	105616	10	25	59	74	91	22	105616.4
		105617.1	105617	12	28	59	74	91	24	105617.4
		105618.1	105618	14	30	72	88	107	27	105618.4
	400	105619.1	105619	16	35	71	88	107	30	105619.4
		105620.1	105620	20	38	71	92	114	36	105620.4
		105621.1	105621	25	45	72	96	120	46	105621.4
		105622.1	105622	30	50	73	100	126	50	105622.4
	315	105623.1	105623	38	60	72	104	133	60	105623.4

Note: If you wish to order a fitting in stainless steel, please change the first two digit from **10..** to **11..**

WELDING NIPPLE WITH O-RING

Type: **1057..** Only Body

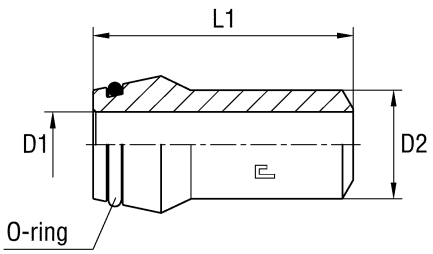

Serie	Bar	Ordering Body	Thickness	Ø Tube	D1	D2	L1
L/S	630	105701	6x1,75	6	2,5	6	31
		105702	8x2	8	4	8	31
	315	105703	10x1,5	10	7	10	32,5
	400	105704	10x2	10	6	10	32,5
	315	105705	12x1,5	12	9	12	32,5
	400	105706	12x2	12	8	12	32,5
	630	105707	12x2,5	12	7	12	32,5
L	315	105708	15x2,5	15	10	15	34
		105709	18x2,5	18	13	18	35,5
	160	105710	22x2,5	22	17	22	38,5
		105711	28x2,5	28	23	28	41,5
		105712	35x3	35	29	35	47,5
		105713	42x3	42	36	42	47,5
S	400	105714	14x3	14	8	14	38,5
	250	105715	16x2	16	12	16	39
	315	105716	16x2,5	16	11	16	39
	400	105717	16x3	16	10	16	39
	250	105718	20x2,5	20	15	20	45
	315	105719	20x3	20	14	20	45
	400	105720	20x4	20	12	20	45
	250	105721	25x3	25	19	25	49,5
	315	105722	25x4	25	17	25	49,5
	400	105723	25x5	25	15	25	49,5
	160	105724	30x3	30	24	30	52
	250	105725	30x4	30	22	30	52
	315	105726	30x5	30	20	30	52
		105727	30x6	30	18	30	52
	160	105728	38x3	38	32	38	56,5
	250	105729	38x5	38	28	38	56,5
	315	105730	38x6	38	26	38	56,5
		105731	38x7	38	22	38	56,5

Note: If you wish to order a fitting in stainless steel, please change the first two digit from **10..** to **11..**

WELDING ELBOW

Type: **1058…1** Only Body

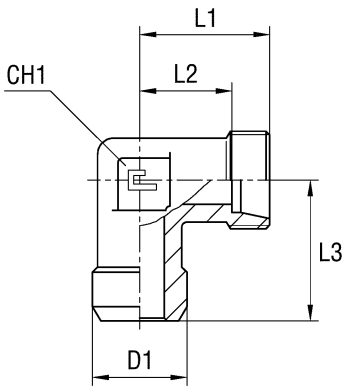

Type: **1058..** B3 Ring

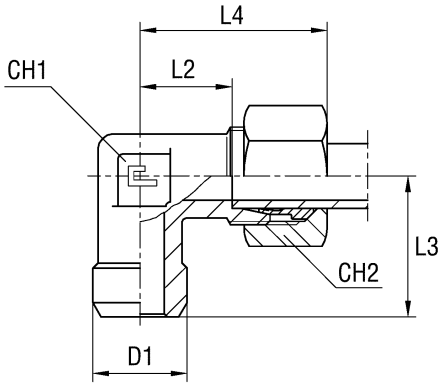

Type: **1058…4** B4 Ring

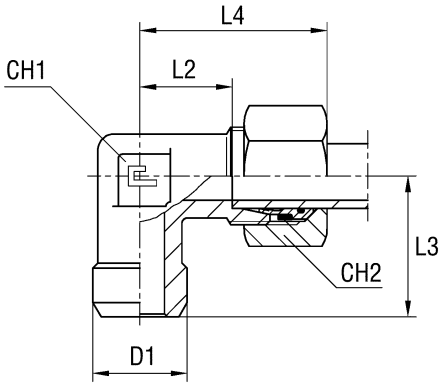

Serie	Bar	Ordering Body	Ordering Equipped B3	Ø Tube	D1	L1	L2	L3	L4	CH1	CH2	Ordering Equipped B4
L	315	105804.1	105804	6	10	19	12	19	27	12	14	105804.4
		105805.1	105805	8	12	21	14	21	29	12	17	105805.4
		105806.1	105806	10	14	22	15	22	30	14	19	105806.4
		105807.1	105807	12	16	24	17	24	32	17	22	105807.4
		105808.1	105808	15	19	28	21	28	36	19	27	105808.4
		105809.1	105809	18	22	31	23,5	31	40	24	32	105809.4
	160	105810.1	105810	22	27	35	27,5	35	44	27	36	105810.4
		105811.1	105811	28	32	38	30,5	38	47	36	41	105811.4
		105812.1	105812	35	40	45	34,5	45	56	41	50	105812.4
		105813.1	105813	42	46	51	40	51	63	50	60	105813.4
S	630	105814.1	105814	6	11	23	16	23	31	12	17	105814.4
		105815.1	105815	8	13	24	17	24	32	14	19	105815.4
		105816.1	105816	10	15	25	17,5	25	34	17	22	105816.4
		105817.1	105817	12	17	29	21,5	29	38	17	24	105817.4
		105818.1	105818	14	19	30	22	30	40	19	27	105818.4
	400	105819.1	105819	16	21	33	24,5	33	43	24	30	105819.4
		105820.1	105820	20	26	37	26,5	37	48	27	36	105820.4
		105821.1	105821	25	31	42	30	42	54	36	46	105821.4
		105822.1	105822	30	36	49	35,5	49	62	41	50	105822.4
	315	105823.1	105823	38	44	57	41	57	72	50	60	105823.4

Note: If you wish to order a fitting in stainless steel, please change the first two digit from **10..** to **11..**
Articles not included in ISO 8434-1 norm available on request only

GAUGE COUPLING
Thread BSP Parallel

Type: **1059…1** Only Body
With metal ferrule

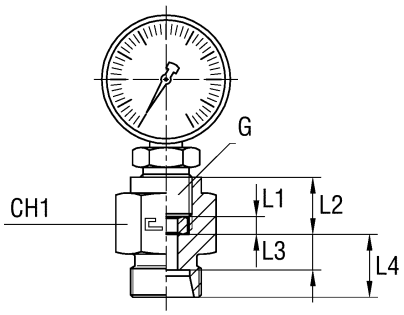

Type: **1059…1.4** Only Body
With o-ring ferrule

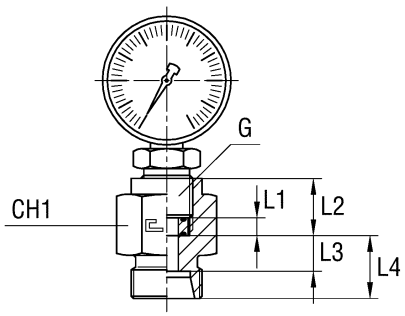

Serie	Bar	Ordering Body+Ferrule	Ø Tube	G	L1	L2	L3	L4	CH1	Ordering Body+Ferrule
L	315	105904.1	6	1/4	4,5	14,5	7,5	14,5	19	105904.1.4
		105905.1	8	1/4	4,5	14,5	7,5	14,5	19	105905.1.4
		105906.1	10	1/4	4,5	14,5	8,5	15,5	19	105906.1.4
		105907.1	12	1/4	4,5	14,5	8,5	15,5	19	105907.1.4
S	630	105914.1	6	1/2	5	20	11	18	30	105914.1.4
		105915.1	8	1/2	5	20	11	18	30	105915.1.4
		105916.1	10	1/2	5	20	10,5	18	30	105916.1.4
		105917.1	12	1/2	5	20	10,5	18	30	105917.1.4

Note: If you wish to order a fitting in stainless steel, please change the first two digit from **10..** to **11..**
Articles not included in ISO 8434-1 norm
Gauge not included

GAUGE COUPLING
Thread BSP Parallel

Type: **1059..** B3 Ring
With metal ferrule

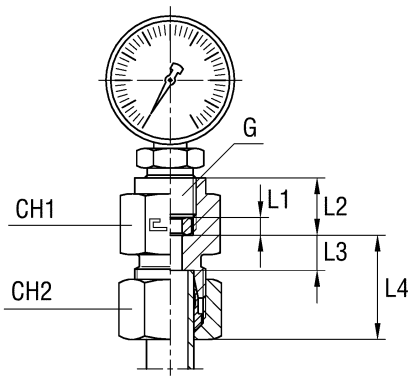

Type: **1059…4** B4 Ring
With o-ring ferrule

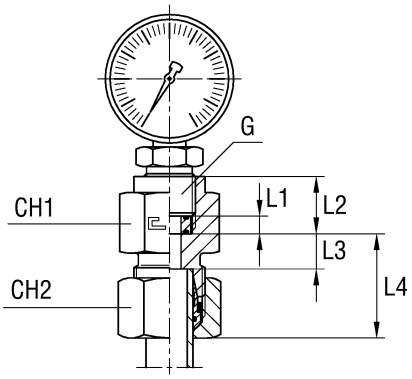

Serie	Bar	Ordering B3 + Ferrule	Ø Tube	G	L1	L2	L3	L4	CH1	CH2	Ordering B4+ Ferrule
L	315	105904	6	1/4	4,5	14,5	7,5	22,5	19	14	105904.4
		105905	8	1/4	4,5	14,5	7,5	22,5	19	17	105905.4
		105906	10	1/4	4,5	14,5	8,5	23,5	19	19	105906.4
		105907	12	1/4	4,5	14,5	8,5	23,5	19	22	105907.4
S	630	105914	6	1/2	5	20	11	26	30	17	105914.4
		105915	8	1/2	5	20	11	26	30	19	105915.4
		105916	10	1/2	5	20	10,5	26,5	30	22	105916.4
		105917	12	1/2	5	20	10,5	26,5	30	24	105917.4

Note: If you wish to order a fitting in stainless steel, please change the first two digit from **10..** to **11..**
Articles not included in ISO 8434-1 norm
Gauge not included

GAUGE STANDPIPE COUPLING
Thread BSP Parallel

Type: **10CFM..** Only Body
With metal ferrule

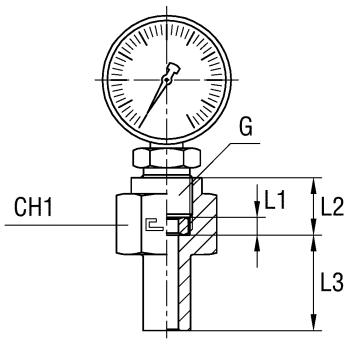

Type: **10CFM...4** Only Body
With o-ring ferrule

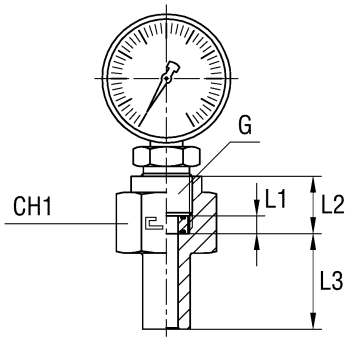

Serie	Bar	Ordering Body+Ferrule	Ø Tube	G	L1	L2	L3	CH1	Ordering Body+Ferrule
L	315	10CFM04	6	1/4	4,5	14,5	23,5	19	10CFM04.4
		10CFM05	8	1/4	4,5	14,5	25	19	10CFM05.4
		10CFM06	10	1/4	4,5	14,5	25	19	10CFM06.4
		10CFM07	12	1/4	4,5	14,5	26,5	19	10CFM07.4
S	630	10CFM14	6	1/2	5	20	25	30	10CFM14.4
		10CFM15	8	1/2	5	20	25,5	30	10CFM15.4
		10CFM16	10	1/2	5	20	27,5	30	10CFM16.4
		10CFM17	12	1/2	5	20	27,5	30	10CFM17.4

Note: If you wish to order a fitting in stainless steel, please change the first two digit from **10..** to **11..**
Articles not included in ISO 8434-1 norm available on request only
Gauge not included

GAUGE STANDPIPE COUPLING
Thread BSP Parallel

Type: **1060..** B3 Ring
With metal ferrule

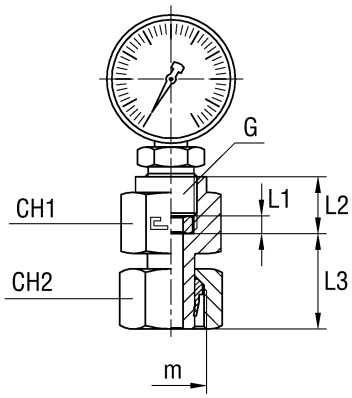

Type: **1060...4** B4 Ring
With o-ring ferrule

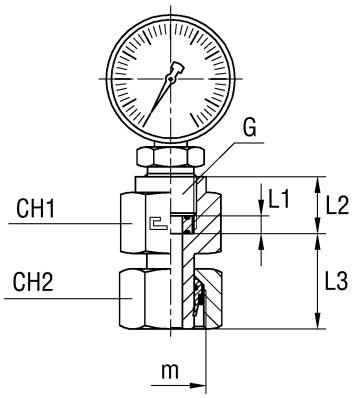

Serie	Bar	Ordering B3 + Ferrule	Ø Tube	G	m	L1	L2	L3	CH1	CH2	Ordering B4 + Ferrule
L	315	106004	6	1/4	12x1,5	4,5	14,5	23,5	19	14	106004.4
		106005	8	1/4	14x1,5	4,5	14,5	25	19	17	106005.4
		106006	10	1/4	16x1,5	4,5	14,5	25	19	19	106006.4
		106007	12	1/4	18x1,5	4,5	14,5	26,5	19	22	106007.4
S	630	106014	6	1/2	14x1,5	5	20	25	30	17	106014.4
		106015	8	1/2	16x1,5	5	20	25,5	30	19	106015.4
		106016	10	1/2	18x1,5	5	20	27,5	30	22	106016.4
		106017	12	1/2	20x1,5	5	20	27,5	30	24	106017.4

Note: If you wish to order a fitting in stainless steel, please change the first two digit from **10..** to **11..**
Articles not included in ISO 8434-1 norm available on request only
Gauge not included

ADJUSTABLE DIN MALE STUD ELBOW WITH O-RING AND WASHER
Thread BSP Parallel

Type: **1061…1** Only Body

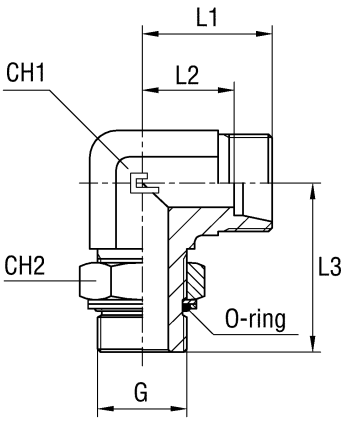

Type: **1061..** B3 Ring

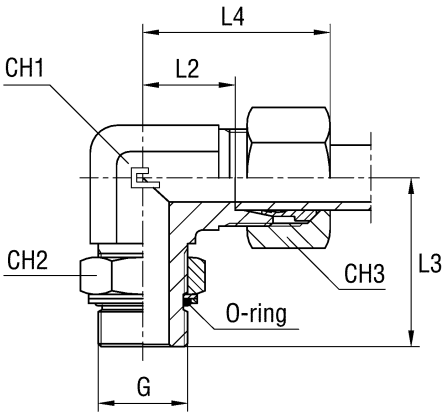

Type: **1061…4** B4 Ring

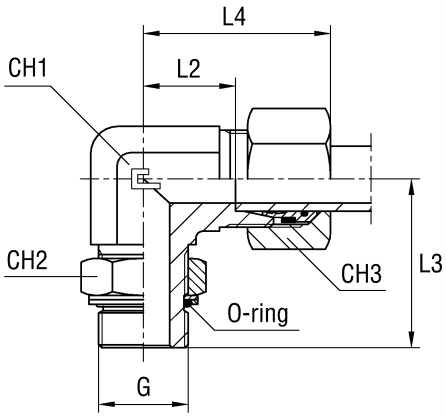

Serie	Bar	Ordering Body	Ordering Equipped B3	Ø Tube	G	L1	L2	L3	L4	CH1	CH2	CH3	Ordering Equipped B4
L	315	106104.1	106104	6	1/8	19	12	26	27	11	14	14	106104.4
		106105.1	106105	8	1/4	21	14	32	29	14	19	17	106105.4
		106106.1	106106	10	1/4	22	15	32	30	14	19	19	106106.4
	250	106107.1	106107	12	3/8	24	17	37	32	19	22	22	106107.4
		106108.1	106108	15	1/2	28	21	44	36	22	27	27	106108.4
		106109.1	106109	18	1/2	31	23,5	47	40	27	27	32	106109.4
	160	106110.1	106110	22	3/4	35	27,5	51	44	27	36	36	106110.4
		106111.1	106111	28	1	38	30,5	53	47	33	41	41	106111.4
		106112.1	106112	35	1 1/4	45	34,5	59	56	41	50	50	106112.4
		106113.1	106113	42	1 1/2	51	40	64	63	48	55	60	106113.4
S	315	106114.1	106114	6	1/4	23	16	32	31	14	19	17	106114.4
		106115.1	106115	8	1/4	24	17	32	32	14	19	19	106115.4
	250	106116.1	106116	10	3/8	25	17,5	37	34	19	22	22	106116.4
		106117.1	106117	12	3/8	29	21,5	37	38	19	22	24	106117.4
		106118.1	106118	14	1/2	30	22	44	40	22	27	27	106118.4
		106119.1	106119	16	1/2	33	24,5	47	43	27	27	30	106119.4
		106120.1	106120	20	3/4	37	26,5	51	48	27	36	36	106120.4
	200	106121.1	106121	25	1	42	30	53	54	33	41	46	106121.4
		106122.1	106122	30	1 1/4	49	35,5	59	62	41	50	50	106122.4
	160	106123.1	106123	38	1 1/2	57	41	64	72	48	55	60	106123.4

Note: If you wish to order a fitting in stainless steel, please change the first two digit from **10..** to **11..**
Articles not included in ISO 8434-1 norm available on request only

ADJUSTABLE DIN MALE STUD ELBOW WITH O-RING AND WASHER
Thread Metric Parallel

Type: **1062…1** Only Body

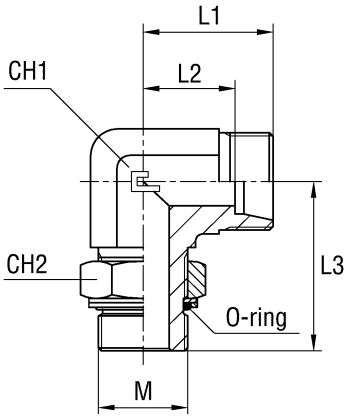

Type: **1062..** B3 Ring

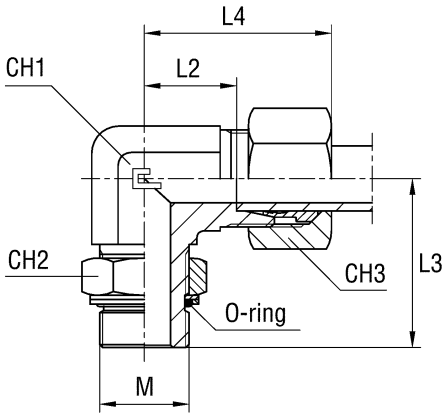

Type: **1062…4** B4 Ring

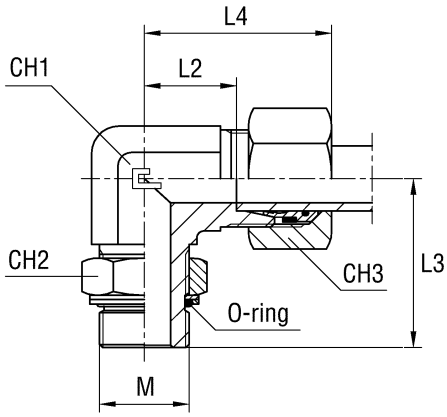

Serie	Bar	Ordering Body	Ordering Equipped B3	Ø Tube	M	L1	L2	L3	L4	CH1	CH2	CH3	Ordering Equipped B4
L	315	106204.1	106204	6	10x1	19	12	27	27	11	14	14	106204.4
		106205.1	106205	8	12x1,5	21	14	31	29	14	17	17	106205.4
		106206.1	106206	10	14x1,5	22	15	33	30	14	19	19	106206.4
		106207.1	106207	12	16x1,5	24	17	38	32	19	22	22	106207.4
		106208.1	106208	15	18x1,5	28	21	40	36	22	24	27	106208.4
	250	106209.1	106209	18	22x1,5	31	23,5	46	40	27	27	32	106209.4
	160	106210.1	106210	22	27x2	35	27,5	50,5	44	27	32	36	106210.4
		106211.1	106211	28	33x2	38	30,5	52,5	47	33	41	41	106211.4
		106212.1	106212	35	42x2	45	34,5	58	56	41	50	50	106212.4
		106213.1	106213	42	48x2	51	40	63	63	48	55	60	106213.4
S	315	106214.1	106214	6	12x1,5	23	16	31	31	14	17	17	106214.4
		106215.1	106215	8	14x1,5	24	17	33	32	14	19	19	106215.4
		106216.1	106216	10	16x1,5	25	17,5	38	34	19	22	22	106216.4
		106217.1	106217	12	18x1,5	29	21,5	38	38	19	24	24	106217.4
	250	106218.1	106218	14	20x1,5	30	22	44	40	22	27	27	106218.4
		106219.1	106219	16	22x1,5	33	24,5	48	43	27	27	30	106219.4
		106220.1	106220	20	27x2	37	26,5	50,5	48	27	32	36	106220.4
	160	106221.1	106221	25	33x2	42	30	52,5	54	33	41	46	106221.4
		106222.1	106222	30	42x2	49	35,5	58	62	41	50	50	106222.4
		106223.1	106223	38	48x2	57	41	63	72	48	55	60	106223.4

Note: If you wish to order a fitting in stainless steel, please change the first two digit from **10..** to **11..**
Articles not included in ISO 8434-1 norm available on request only

ADJUSTABLE DIN MALE STUD ELBOW WITH O-RING Thread UNF/UN-2A

Type: **1063..1** Only Body

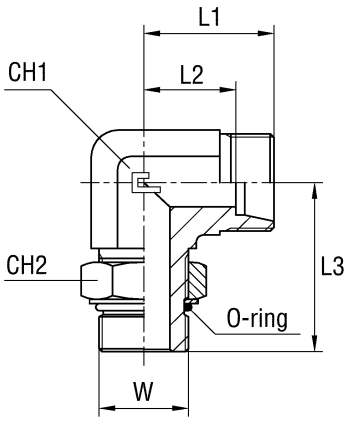

Type: **1063..** B3 Ring

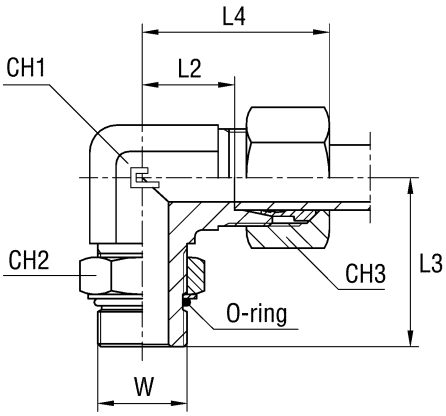

1063...4 B4 Ring

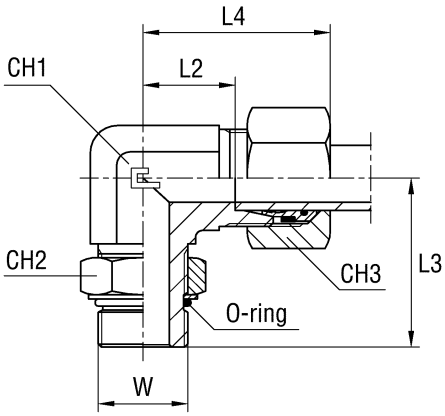

Serie	Bar	Ordering Body	Ordering Equipped B3	Ø Tube	W	L1	L2	L3	L4	CH1	CH2	CH3	Ordering Equipped B4
L	315	106304.1	106304	6	7/16-20	19	12	27	27	11	14	14	106304.4
		106305.1	106305	8	7/16-20	21	14	28	29	14	14	17	106305.4
		106306.1	106306	10	9/16-18	22	15	32	30	14	17	19	106306.4
		106307.1	106307	12	3/4-16	24	17	37	32	19	22	22	106307.4
		106308.1	106308	15	7/8-14	28	21	43	36	22	27	27	106308.4
		106309.1	106309	18	7/8-14	31	23,5	47	40	27	27	32	106309.4
	160	106310.1	106310	22	1 1/16-12	35	27,5	49,5	44	27	32	36	106310.4
		106311.1	106311	28	1 5/16-12	38	30,5	52	47	33	41	41	106311.4
		106312.1	106312	35	1 5/8-12	45	34,5	58	56	41	50	50	106312.4
		106313.1	106313	42	1 7/8-12	51	40	60	63	48	55	60	106313.4
S	400	106314.1	106314	6	7/16-20	23	16	29	31	14	14	17	106314.4
		106315.1	106315	8	9/16-18	24	17	33	32	14	17	19	106315.4
		106316.1	106316	10	9/16-18	25	17,5	37,5	34	19	17	22	106316.4
		106317.1	106317	12	3/4-16	29	21,5	38	38	19	22	24	106317.4
		106318.1	106318	14	7/8-14	30	22	44	40	22	27	27	106318.4
		106319.1	106319	16	7/8-14	33	24,5	48	43	27	27	30	106319.4
		106320.1	106320	20	1 1/16-12	37	26,5	51	48	27	32	36	106320.4
		106321.1	106321	25	1 5/16-12	42	30	53	54	33	41	46	106321.4
	250	106322.1	106322	30	1 5/8-12	49	35,5	59	62	41	50	50	106322.4
		106323.1	106323	38	1 7/8-12	57	41	62	72	48	55	60	106323.4

Note: If you wish to order a fitting in stainless steel, please change the first two digit from **10..** to **11..**
Articles not included in ISO 8434-1 norm available on request only

ADJUSTABLE DIN MALE 45° STUD ELBOW WITH O-RING AND WASHER
Thread BSP Parallel

Type: **1064…1** Only Body

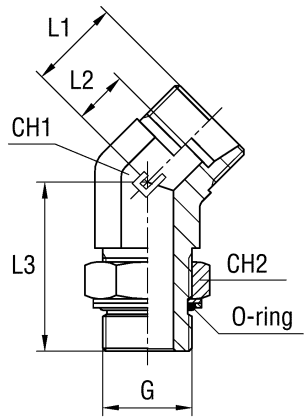

Type: **1064..** B3 Ring

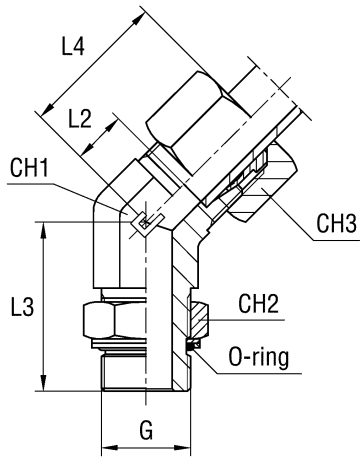

Type: **1064…4** B4 Ring

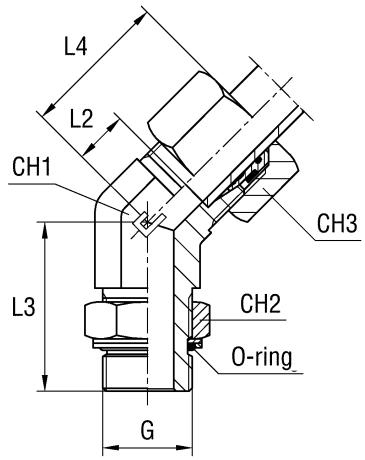

Serie	Bar	Ordering Body	Ordering Equipped B3	Ø Tube	G	L1	L2	L3	L4	CH1	CH2	CH3	Ordering Equipped B4
L	315	106404.1	106404	6	1/8	16	9	26	24	11	14	14	106404.4
		106405.1	106405	8	1/4	19	12	29	27	14	19	17	106405.4
		106406.1	106406	10	1/4	19	12	29	27	14	19	19	106406.4
	250	106407.1	106407	12	3/8	21	14	33	29	19	22	22	106407.4
		106408.1	106408	15	1/2	24	17	38,5	32	22	27	27	106408.4
		106409.1	106409	18	1/2	24,5	17	38,5	33,5	27	27	32	106409.4
	160	106410.1	106410	22	3/4	26	18,5	44	35	27	36	36	106410.4
		106411.1	106411	28	1	30,5	23	47	39,5	33	41	41	106411.4
		106412.1	106412	35	1 1/4	33	22,5	48	44	41	50	50	106412.4
		106413.1	106413	42	1 1/2	37	26	48	49	48	55	60	106413.4
S	315	106414.1	106414	6	1/4	16	9	29	24	14	19	17	106414.4
		106415.1	106415	8	1/4	19	12	29	27	14	19	19	106415.4
	250	106416.1	106416	10	3/8	20	12,5	33	29	19	22	22	106416.4
		106417.1	106417	12	3/8	21	13,5	33	30	19	22	24	106417.4
		106418.1	106418	14	1/2	24	16	38,5	34	22	27	27	106418.4
		106419.1	106419	16	1/2	24	15,5	38,5	34	27	27	30	106419.4
		106420.1	106420	20	3/4	26,5	16	44	37,5	27	36	36	106420.4
	200	106421.1	106421	25	1	31	19	47	43	33	41	46	106421.4
		106422.1	106422	30	1 1/4	35	21,5	48	48	41	50	50	106422.4
	160	106423.1	106423	38	1 1/2	39	23	48	54	48	55	60	106423.4

Note: If you wish to order a fitting in stainless steel, please change the first two digit from **10..** to **11..**
Articles not included in ISO 8434-1 norm available on request only

ADJUSTABLE DIN MALE 45° STUD ELBOW WITH O-RING AND WASHER
Thread Metric Parallel

Type: **1065…1** Only Body

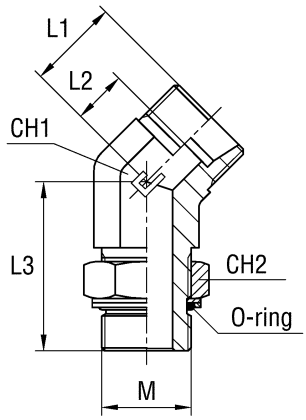

Type: **1065..** B3 Ring

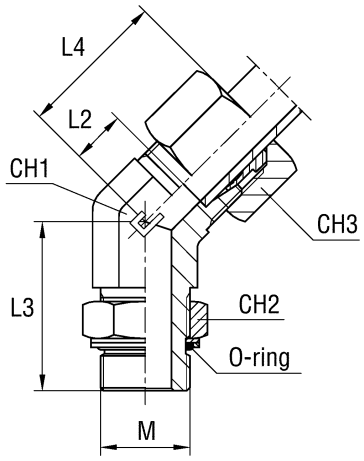

Type: **1065…4** B4 Ring

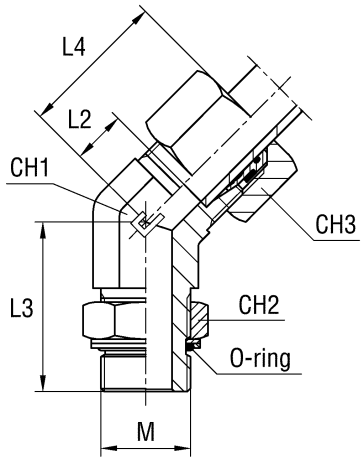

Serie	Bar	Ordering Body	Ordering Equipped B3	Ø Tube	M	L1	L2	L3	L4	CH1	CH2	CH3	Ordering Equipped B4
L	315	106504.1	106504	6	10x1	16	9	27	24	11	14	14	106504.4
		106505.1	106505	8	12x1,5	19	12	27	27	14	17	17	106505.4
		106506.1	106506	10	14x1,5	19	12	28	27	14	19	19	106506.4
		106507.1	106507	12	16x1,5	21	14	33	29	19	22	22	106507.4
		106508.1	106508	15	18x1,5	24	17	36	32	22	24	27	106508.4
	250	106509.1	106509	18	22x1,5	24,5	17	38	33,5	27	27	32	106509.4
	160	106510.1	106510	22	27x2	26	18,5	46	35	27	32	36	106510.4
		106511.1	106511	28	33x2	30,5	23	46	39,5	33	41	41	106511.4
		106512.1	106512	35	42x2	33	22,5	48	44	41	50	50	106512.4
		106513.1	106513	42	48x2	37	26	50	49	48	55	60	106513.4
S	315	106514.1	106514	6	12x1,5	16	9	27	24	14	17	17	106514.4
		106515.1	106515	8	14x1,5	19	12	28	27	14	19	19	106515.4
		106516.1	106516	10	16x1,5	20	12,5	33	29	19	22	22	106516.4
		106517.1	106517	12	18x1,5	21	13,5	33	30	19	24	24	106517.4
	250	106518.1	106518	14	20x1,5	24	16	39	34	22	27	27	106518.4
		106519.1	106519	16	22x1,5	24	15,5	40	34	27	27	30	106519.4
		106520.1	106520	20	27x2	26,5	16	46	37,5	27	32	36	106520.4
	160	106521.1	106521	25	33x2	31	19	46	43	33	41	46	106521.4
		106522.1	106522	30	42x2	35	21,5	48	48	41	50	50	106522.4
		106523.1	106523	38	48x2	39	23	50	54	48	55	60	106523.4

Note: If you wish to order a fitting in stainless steel, please change the first two digit from **10..** to **11..**
Articles not included in ISO 8434-1 norm available on request only

ADJUSTABLE DIN MALE 45° STUD ELBOW WITH O-RING Thread UNF/UN-2A

Type: **1066…1** Only Body

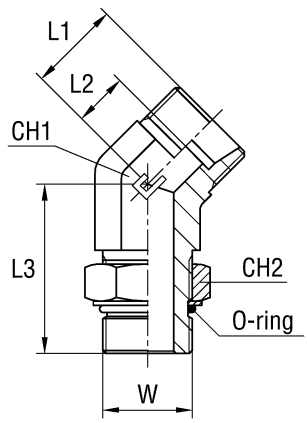

Type: **1066..** B3 Ring

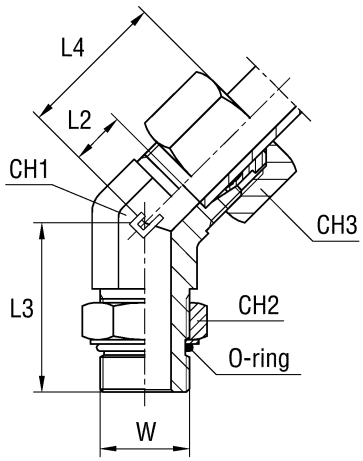

Type: **1066…4** B4 Ring

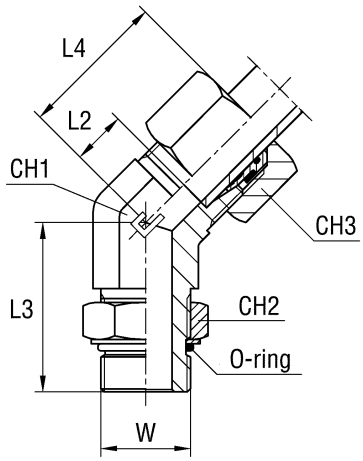

Serie	Bar	Ordering Body	Ordering Equipped B3	Ø Tube	W	L1	L2	L3	L4	CH1	CH2	CH3	Ordering Equipped B4
L	315	106604.1	106604	6	7/16-20	16	9	26,5	24	11	14	14	106604.4
		106605.1	106605	8	7/16-20	19	12	26,5	27	14	14	17	106605.4
		106606.1	106606	10	9/16-18	19	12	29	27	14	17	19	106606.4
		106607.1	106607	12	3/4-16	21	14	33	29	19	22	22	106607.4
		106608.1	106608	15	7/8-14	24	17	39	32	22	27	27	106608.4
		106609.1	10660	18	7/8-14	24,5	17	39	33,5	27	27	32	106609.4
	160	106610.1	106610	22	11/16-12	26	18,5	44	35	27	32	36	106610.4
		106611.1	106611	28	15/16-12	30,5	23	47	39,5	33	41	41	106611.4
		106612.1	106612	35	15/8-12	33	22,5	48	44	41	50	50	106612.4
		106613.1	106613	42	17/8-12	37	26	48,5	49	48	55	60	106613.4
S	400	106614.1	106614	6	7/16-20	16	9	27	24	14	14	17	106614.4
		106615.1	106615	8	9/16-18	19	12	30	27	14	17	19	106615.4
		106616.1	106616	10	9/16-18	20	12,5	34	29	19	17	22	106616.4
		106617.1	106617	12	3/4-16	21	13,5	34	30	19	22	24	106617.4
		106618.1	106618	14	7/8-14	24	16	39	34	22	27	27	106618.4
		106619.1	106619	16	7/8-14	24	15,5	39	34	27	27	30	106619.4
		106620.1	106620	20	11/16-12	26,5	16	44	37,5	27	32	36	106620.4
		106621.1	106621	25	15/16-12	31	19	47	43	33	41	46	106621.4
	315	106622.1	106622	30	15/8-12	35	21,5	48	48	41	50	50	106622.4
		106623.1	106623	38	17/8-12	39	23	50	54	48	55	60	106623.4

Note: If you wish to order a fitting in stainless steel, please change the first two digit from **10..** to **11..**
Articles not included in ISO 8434-1 norm available on request only

ADJUSTABLE DIN MALE STUD BARREL TEE WITH O-RING AND WASHER
Thread Metric Parallel

Type: **1067…1** Only Body

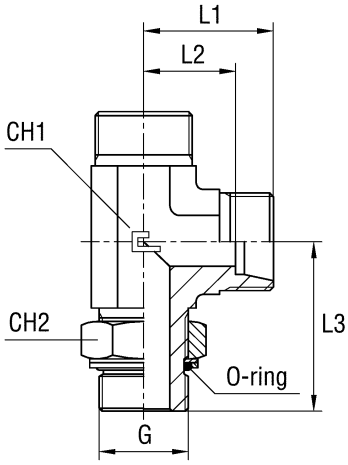

Type: **1067..** B3 Ring

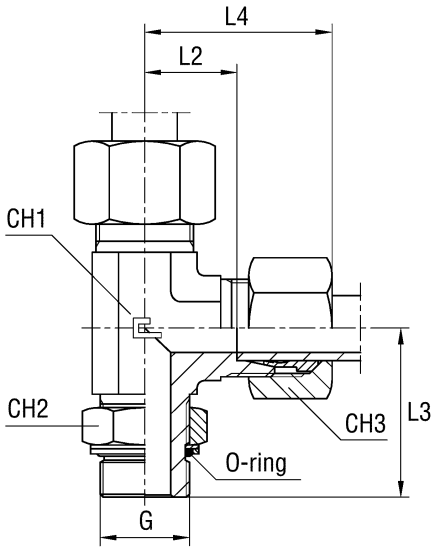

Type: **1067…4** B4 Ring

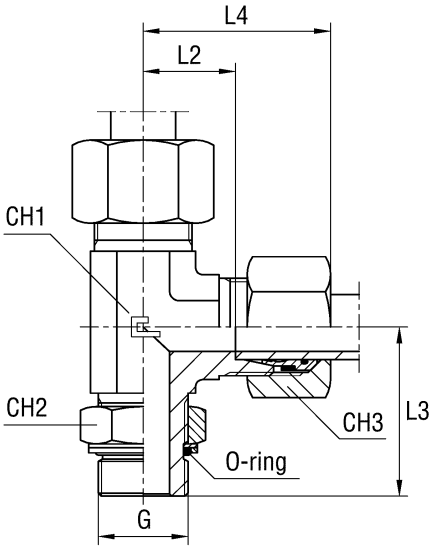

Serie	Bar	Ordering Body	Ordering Equipped B3	Ø Tube	G	L1	L2	L3	L4	CH1	CH2	CH3	Ordering Equipped B4
L	315	106704.1	106704	6	1/8	19	12	26	27	11	14	14	106704.4
		106705.1	106705	8	1/4	21	14	32	29	14	19	17	106705.4
		106706.1	106706	10	1/4	22	15	32	30	14	19	19	106706.4
	250	106707.1	106707	12	3/8	24	17	37	32	19	22	22	106707.4
		106708.1	106708	15	1/2	28	21	44	36	22	27	27	106708.4
		106709.1	106709	18	1/2	31	23,5	47	40	27	27	32	106709.4
	160	106710.1	106710	22	3/4	35	27,5	51	44	27	36	36	106710.4
		106711.1	106711	28	1	38	30,5	53	47	33	41	41	106711.4
		106712.1	106712	35	1 1/4	45	34,5	59	56	41	50	50	106712.4
		106713.1	106713	42	1 1/2	51	40	64	63	48	55	60	106713.4
S	315	106714.1	106714	6	1/4	23	16	32	31	14	19	17	106714.4
		106715.1	106715	8	1/4	24	17	32	32	14	19	19	106715.4
	250	106716.1	106716	10	3/8	25	17,5	37	34	19	22	22	106716.4
		106717.1	106717	12	3/8	29	21,5	37	38	19	22	24	106717.4
		106718.1	106718	14	1/2	30	22	44	40	22	27	27	106718.4
		106719.1	106719	16	1/2	33	24,5	47	43	27	27	30	106719.4
		106720.1	106720	20	3/4	37	26,5	51	48	27	36	36	106720.4
	200	106721.1	106721	25	1	42	30	53	54	33	41	46	106721.4
		106722.1	106722	30	1 1/4	49	35,5	59	62	41	50	50	106722.4
	160	106723.1	106723	38	1 1/2	57	41	64	72	48	55	60	106723.4

Note: If you wish to order a fitting in stainless steel, please change the first two digit from **10..** to **11..**
Articles not included in ISO 8434-1 norm available on request only

ADJUSTABLE DIN MALE STUD BARREL TEE WITH O-RING AND WASHER
Thread Metric Parallel

Type: **1068…1** Only Body

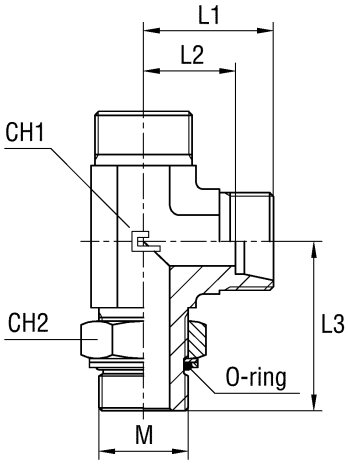

Type: **1068..** B3 Ring

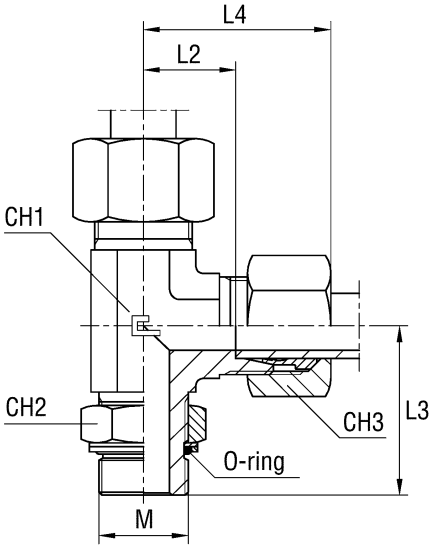

Type: **1068…4** B4 Ring

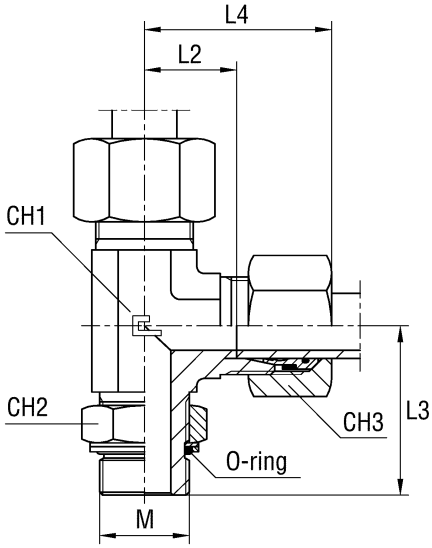

Serie	Bar	Ordering Body	Ordering Equipped B3	Ø Tube	M	L1	L2	L3	L4	CH1	CH2	CH3	Ordering Equipped B4
L	315	106804.1	106804	6	10x1	19	12	27	27	11	14	14	106804.4
		106805.1	106805	8	12x1,5	21	14	31	29	14	17	17	106805.4
		106806.1	106806	10	14x1,5	22	15	33	30	14	19	19	106806.4
		106807.1	106807	12	16x1,5	24	17	38	32	19	22	22	106807.4
		106808.1	106808	15	18x1,5	28	21	40	36	22	24	27	106808.4
	250	106809.1	106809	18	22x1,5	31	23,5	46	40	27	27	32	106809.4
	160	106810.1	106810	22	27x2	35	27,5	50,5	44	27	32	36	106810.4
		106811.1	106811	28	33x2	38	30,5	52,5	47	33	41	41	106811.4
		106812.1	106812	35	42x2	45	34,5	58	56	41	50	50	106812.4
		106813.1	106813	42	48x2	51	40	63	63	48	55	60	106813.4
S	315	106814.1	106814	6	12x1,5	23	16	31	31	14	17	17	106814.4
		106815.1	106815	8	14x1,5	24	17	33	32	14	19	19	106815.4
		106816.1	106816	10	16x1,5	25	17,5	38	34	19	22	22	106816.4
		106817.1	106817	12	18x1,5	29	21,5	38	38	19	24	24	106817.4
	250	106818.1	106818	14	20x1,5	30	22	44	40	22	27	27	106818.4
		106819.1	106819	16	22x1,5	33	24,5	48	43	27	27	30	106819.4
		106820.1	106820	20	27x2	37	26,5	50,5	48	27	32	36	106820.4
	160	106821.1	106821	25	33x2	42	30	52,5	54	33	41	46	106821.4
		106822.1	106822	30	42x2	49	35,5	58	62	41	50	50	106822.4
		106823.1	106823	38	48x2	57	41	63	72	48	55	60	106823.4

Note: If you wish to order a fitting in stainless steel, please change the first two digit from **10..** to **11..**
Articles not included in ISO 8434-1 norm available on request only

ADJUSTABLE DIN MALE STUD BARREL TEE WITH O-RING Thread UNF/UN-2A

Type: **1069…1** Only Body

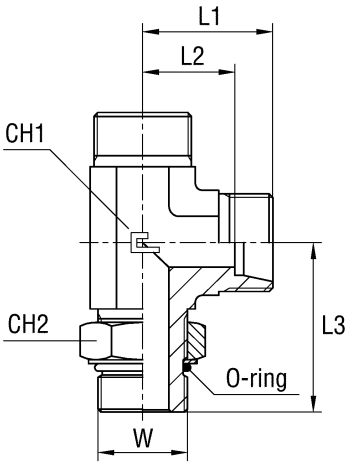

Type: **1069..** B3 Ring

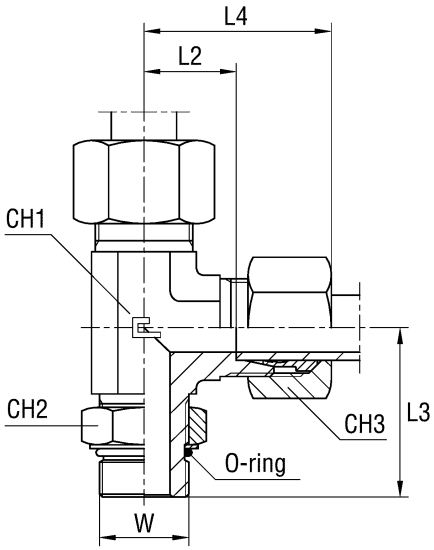

Type: **1069…4** B4 Ring

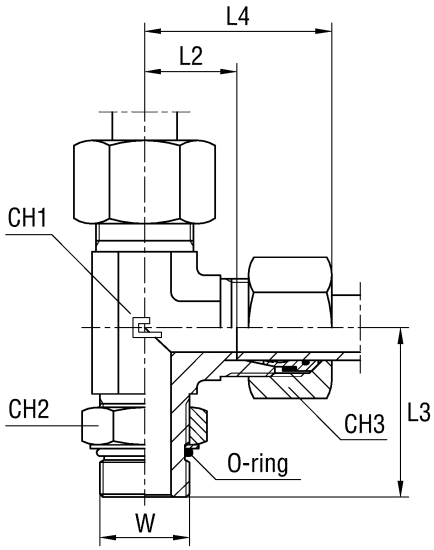

Serie	Bar	Ordering Body	Ordering Equipped B3	Ø Tube	W	L1	L2	L3	L4	CH1	CH2	CH3	Ordering Equipped B4
L	315	106904.1	106904	6	7/16-20	19	12	27	27	11	14	14	106904.4
		106905.1	106905	8	7/16-20	21	14	28	29	14	14	17	106905.4
		106906.1	106906	10	9/16-18	22	15	32	30	14	17	19	106906.4
		106907.1	106907	12	3/4-16	24	17	37	32	19	22	22	106907.4
		106908.1	106908	15	7/8-14	28	21	43	36	22	27	27	106908.4
		106909.1	106909	18	7/8-14	31	23,5	47	40	27	27	32	106909.4
	160	106910.1	106910	22	11/16-12	35	27,5	49,5	44	27	32	36	106910.4
		106911.1	106911	28	15/16-12	38	30,5	52	47	33	41	41	106911.4
		106912.1	106912	35	15/8-12	45	34,5	58	56	41	50	50	106912.4
		106913.1	106913	42	17/8-12	51	40	60	63	48	55	60	106913.4
S	400	106914.1	106914	6	7/16-20	23	16	29	31	14	14	17	106914.4
		106915.1	106915	8	9/16-18	24	17	33	32	14	17	19	106915.4
		106916.1	106916	10	9/16-18	25	17,5	37,5	34	19	17	22	106916.4
		106917.1	106917	12	3/4-16	29	21,5	38	38	19	22	24	106917.4
		106918.1	106918	14	7/8-14	30	22	44	40	22	27	27	106918.4
		106919.1	106919	16	7/8-14	33	24,5	48	43	27	27	30	106919.4
		106920.1	106920	20	11/16-12	37	26,5	51	48	27	32	36	106920.4
		106921.1	106921	25	15/16-12	42	30	53	54	33	41	46	106921.4
	250	106922.1	106922	30	15/8-12	49	35,5	59	62	41	50	50	106922.4
		106923.1	106923	38	17/8-12	57	41	62	72	48	55	60	106923.4

Note: If you wish to order a fitting in stainless steel, please change the first two digit from **10..** to **11..**
Articles not included in ISO 8434-1 norm available on request only

ADJUSTABLE DIN MALE STUD BRANCH TEE WITH O-RING AND WASHER
Thread BSP Parallel

Type: **1070…1** Only Body

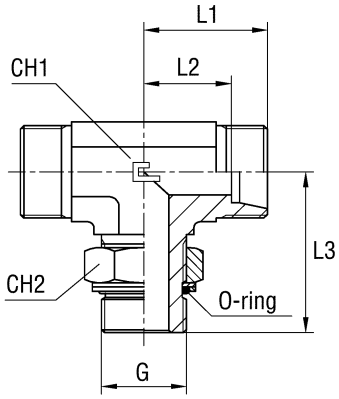

Type: **1070..** B3 Ring

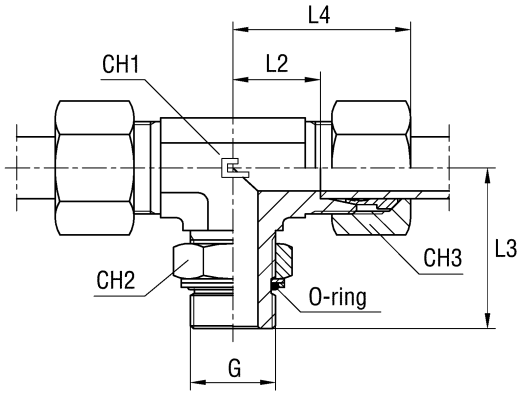

Type: **1070…4** B4 Ring

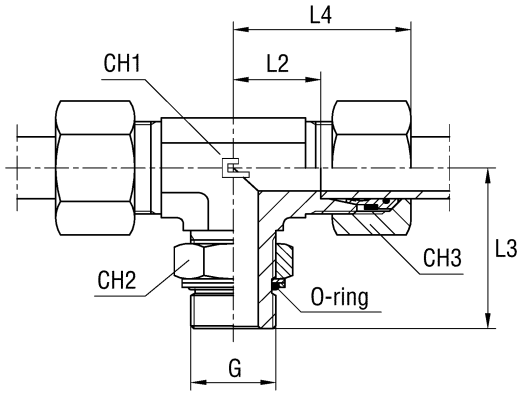

Serie	Bar	Ordering Body	Ordering Equipped B3	Ø Tube	G	L1	L2	L3	L4	CH1	CH2	CH3	Ordering Equipped B4
L	315	107004.1	107004	6	1/8	19	12	26	27	11	14	14	107004.4
		107005.1	107005	8	1/4	21	14	32	29	14	19	17	107005.4
		107006.1	107006	10	1/4	22	15	32	30	14	19	19	107006.4
	250	107007.1	107007	12	3/8	24	17	37	32	19	22	22	107007.4
		107008.1	107008	15	1/2	28	21	44	36	22	27	27	107008.4
		107009.1	107009	18	1/2	31	23,5	47	40	27	27	32	107009.4
	160	107010.1	107010	22	3/4	35	27,5	51	44	27	36	36	107010.4
		107011.1	107011	28	1	38	30,5	53	47	33	41	41	107011.4
		107012.1	107012	35	1 1/4	45	34,5	59	56	41	50	50	107012.4
		107013.1	107013	42	1 1/2	51	40	64	63	48	55	60	107013.4
S	315	107014.1	107014	6	1/4	23	16	32	31	14	19	17	107014.4
		107015.1	107015	8	1/4	24	17	32	32	14	19	19	107015.4
	250	107016.1	107016	10	3/8	25	17,5	37	34	19	22	22	107016.4
		107017.1	107017	12	3/8	29	21,5	37	38	19	22	24	107017.4
		107018.1	107018	14	1/2	30	22	44	40	22	27	27	107018.4
		107019.1	107019	16	1/2	33	24,5	47	43	27	27	30	107019.4
		107020.1	107020	20	3/4	37	26,5	51	48	27	36	36	107020.4
	200	107021.1	107021	25	1	42	30	53	54	33	41	46	107021.4
		107022.1	107022	30	1 1/4	49	35,5	59	62	41	50	50	107022.4
	160	107023.1	107023	38	1 1/2	57	41	64	72	48	55	60	107023.4

Note: If you wish to order a fitting in stainless steel, please change the first two digit from **10..** to **11..**
Articles not included in ISO 8434-1 norm available on request only

ADJUSTABLE DIN MALE STUD BRANCH TEE WITH O-RING AND WASHER
Thread Metric Parallel

Type: **1071..1** Only Body

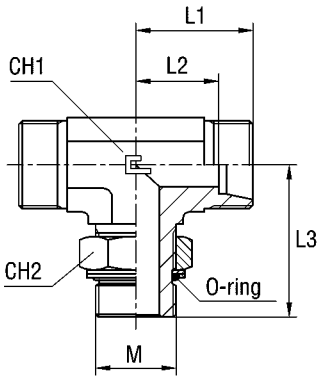

Type: **1071..** B3 Ring

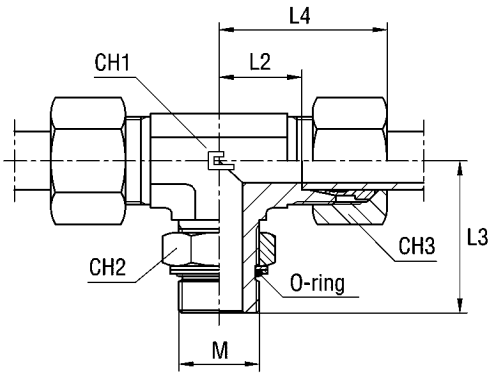

Type: **1071...4** B4 Ring

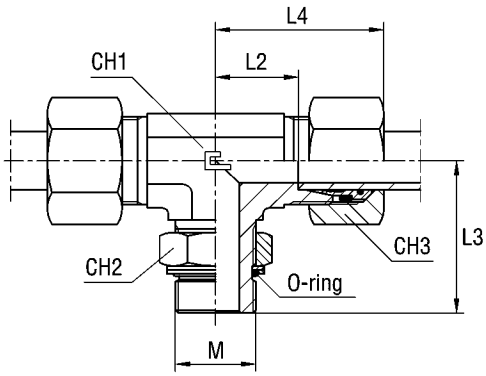

Serie	Bar	Ordering Body	Ordering Equipped B3	Ø Tube	M	L1	L2	L3	L4	CH1	CH2	CH3	Ordering Equipped B4
L	315	107104.1	107104	6	10x1	19	12	27	27	11	14	14	107104.4
		107105.1	107105	8	12x1,5	21	14	31	29	14	17	17	107105.4
		107106.1	107106	10	14x1,5	22	15	33	30	14	19	19	107106.4
		107107.1	107107	12	16x1,5	24	17	38	32	19	22	22	107107.4
		107108.1	107108	15	18x1,5	28	21	40	36	22	24	27	107108.4
	250	107109.1	107109	18	22x1,5	31	23,5	46	40	27	27	32	107109.4
	160	107110.1	107110	22	27x2	35	27,5	50,5	44	27	32	36	107110.4
		107111.1	107111	28	33x2	38	30,5	52,5	47	33	41	41	107111.4
		107112.1	107112	35	42x2	45	34,5	58	56	41	50	50	107112.4
		107113.1	107113	42	48x2	51	40	63	63	48	55	60	107113.4
S	315	107114.1	107114	6	12x1,5	23	16	31	31	14	17	17	107114.4
		107115.1	107115	8	14x1,5	24	17	33	32	14	19	19	107115.4
		107116.1	107116	10	16x1,5	25	17,5	38	34	19	22	22	107116.4
		107117.1	107117	12	18x1,5	29	21,5	38	38	19	24	24	107117.4
	250	107118.1	107118	14	20x1,5	30	22	44	40	22	27	27	107118.4
		107119.1	107119	16	22x1,5	33	24,5	48	43	27	27	30	107119.4
		107120.1	107120	20	27x2	37	26,5	50,5	48	27	32	36	107120.4
	160	107121.1	107121	25	33x2	42	30	52,5	54	33	41	46	107121.4
		107122.1	107122	30	42x2	49	35,5	58	62	41	50	50	107122.4
		107123.1	107123	38	48x2	57	41	63	72	48	55	60	107123.4

Note: If you wish to order a fitting in stainless steel, please change the first two digit from **10..** to **11..**
Articles not included in ISO 8434-1 norm available on request only

ADJUSTABLE DIN MALE STUD BRANCH TEE WITH O-RING Thread UNF/UN-2A

Type: **1072…1** Only Body

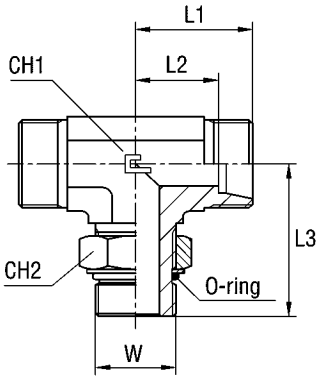

Type: **1072..** B3 Ring

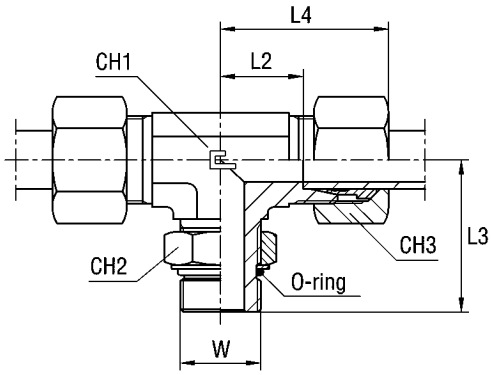

Type: **1072…4** B4 Ring

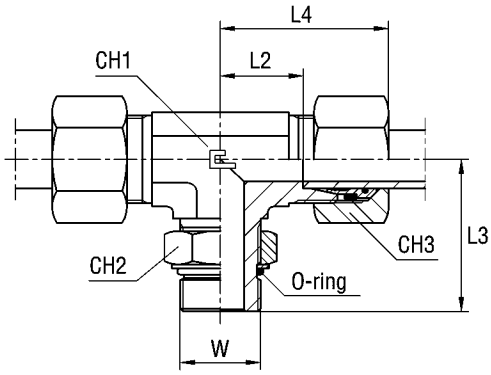

Serie	Bar	Ordering Body	Ordering Equipped B3	Ø Tube	W	L1	L2	L3	L4	CH1	CH2	CH3	Ordering Equipped B4
L	315	107204.1	107204	6	7/16-20	19	12	27	27	11	14	14	107204.4
		107205.1	107205	8	7/16-20	21	14	28	29	14	14	17	107205.4
		107206.1	107206	10	9/16-18	22	15	32	30	14	17	19	107206.4
		107207.1	107207	12	3/4-16	24	17	37	32	19	22	22	107207.4
		107208.1	107208	15	7/8-14	28	21	43	36	22	27	27	107208.4
		107209.1	107209	18	7/8-14	31	23,5	47	40	27	27	32	107209.4
	160	107210.1	107210	22	11/16-12	35	27,5	49,5	44	27	32	36	107210.4
		107211.1	107211	28	15/16-12	38	30,5	52	47	33	41	41	107211.4
		107212.1	107212	35	15/8-12	45	34,5	58	56	41	50	50	107212.4
		107213.1	107213	42	17/8-12	51	40	60	63	48	55	60	107213.4
S	400	107214.1	107214	6	7/16-20	23	16	29	31	14	14	17	107214.4
		107215.1	107215	8	9/16-18	24	17	33	32	14	17	19	107215.4
		107216.1	107216	10	9/16-18	25	17,5	37,5	34	19	17	22	107216.4
		107217.1	107217	12	3/4-16	29	21,5	38	38	19	22	24	107217.4
		107218.1	107218	14	7/8-14	30	22	44	40	22	27	27	107218.4
		107219.1	107219	16	7/8-14	33	24,5	48	43	27	27	30	107219.4
		107220.1	107220	20	11/16-12	37	26,5	51	48	27	32	36	107220.4
		107221.1	107221	25	15/16-12	42	30	53	54	33	41	46	107221.4
	250	107222.1	107222	30	15/8-12	49	35,5	59	62	41	50	50	107222.4
		107223.1	107223	38	17/8-12	57	41	62	72	48	55	60	107223.4

Note: If you wish to order a fitting in stainless steel, please change the first two digit from **10..** to **11..**
Articles not included in ISO 8434-1 norm available on request only

BLANKING PLUG WITH O-RING

Type: **1073..** Only Body

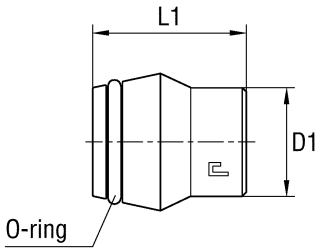

Serie	Bar	Ordering Body	Ø Tube	D1	L1
L	315	107304	6	6	17
		107305	8	8	17
		107306	10	10	20
		107307	12	12	21
		107308	15	15	21
		107309	18	18	23
	160	107310	22	22	23
		107311	28	28	25
		107312	35	35	29
		107313	42	42	30
S	630	107304	6	6	17
		107305	8	8	17
		107306	10	10	20
		107307	12	12	21
		107318	14	14	23
	400	107319	16	16	24
		107320	20	20	28
		107321	25	25	31
		107322	30	30	34
	315	107323	38	38	38

Note: If you wish to order a fitting in stainless steel, please change the first two digit from **10..** to **11..**

MALE - FEMALE ADAPTER WITH ELASTOMER SEAL Thread BSP Parallel

Type: **1074..**

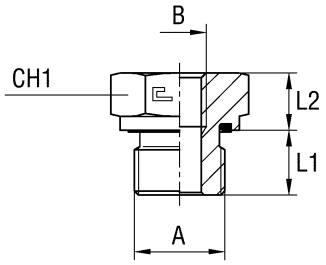

Serie	Bar	Ordering Complete	A	B	L1	L2	CH1
L/S	630	107401	3/8	1/8	12	10,5	22
		107402	1/2	1/8	14	10	27
		107403	1/2	1/4	14	10	27
	400	107404	3/4	1/4	16	10	32
		107405	3/4	3/8	16	10	32
		107406	1	1/4	18	11	41
		107407	1	3/8	18	11	41
		107408	1	1/2	18	11	41
		107409	1 1/4	1/2	20	12	50
		107410	1 1/4	3/4	20	12	50
	315	107411	1 1/2	1/2	22	14	55
		107412	1 1/2	3/4	22	14	55
		107413	1 1/2	1	22	14	55

Note: If you wish to order a fitting in stainless steel, please change the first two digit from **10..** to **11..**

MALE - FEMALE ADAPTER WITH ELASTOMER SEAL Thread BSP Parallel

Type: **1075..**

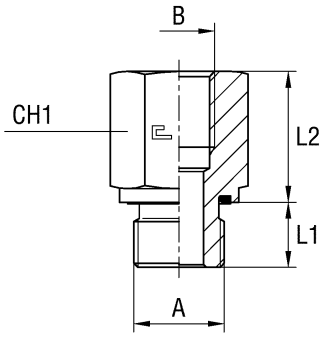

Serie	Bar	Ordering Complete	A	B	L1	L2	CH1
L/S	630	107501	1/8	1/4	8	23	19
		107502	1/8	3/8	8	24	24
		107503	1/4	1/8	12	16	19
		107504	1/4	3/8	12	24	24
		107505	1/4	1/2	12	28	30
		107506	1/4	3/4	12	31	36
		107507	3/8	1/4	12	24	22
		107508	3/8	1/2	12	29	30
	400	107509	3/8	3/4	12	32	36
	630	107510	1/2	3/8	14	22	27
	400	107511	1/2	3/4	14	32	36
		107512	1/2	1	14	35	41
		107513	1/2	1 1/4	14	39	55
		107514	3/4	1/2	16	26	32
		107515	3/4	1	16	35	41
		107516	3/4	1 1/4	16	39	55
	315	107517	3/4	1 1/2	16	41	60
	400	107518	1	3/4	18	29	41
		107519	1	1 1/4	18	39	55
	315	107520	1	1 1/2	18	41	60
	400	107521	1 1/4	1	20	31	50
	315	107522	1 1/4	1 1/2	20	40	60
		107523	1 1/2	1 1/4	22	46	50

Note: If you wish to order a fitting in stainless steel, please change the first two digit from **10..** to **11..**

CLOSURE PLUG WITH EXAGON SOCKET HEAD WITH ELASTOMER SEAL
Thread BSP Parallel

Type: **1076..**

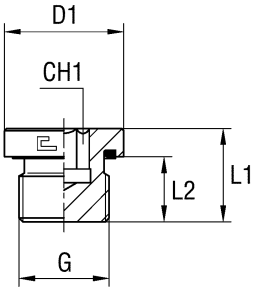

Serie	Bar	Ordering Complete	G	D1	L1	L2	CH1
S	400	107601	1/8	14	12	8	5
		107602	1/4	19	17	12	6
		107603	3/8	22	17	12	8
		107604	1/2	27	19	14	10
		107605	3/4	32	21	16	12
		107606	1	40	22,5	16	17
	250	107607	1 1/4	50	22,5	16	22
		107608	1 1/2	55	22,5	16	24

Note: If you wish to order a fitting in stainless steel, please change the first two digit from **10..** to **11..**

CLOSURE PLUG WITH EXAGON SOCKET HEAD WITH ELASTOMER SEAL
Thread Metric Parallel

Type: **1077....**

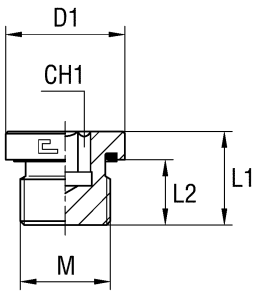

Serie	Bar	Ordering Complete	M	D1	L1	L2	CH1
S	400	107701	10x1	14	12	8	5
		107702	12x1,5	17	17	12	6
		107703	14x1,5	19	17	12	6
		107704	16x1,5	22	17	12	8
		107705	18x1,5	24	17	12	8
		107706	20x1,5	26	19	14	10
		107707	22x1,5	27	19	14	10
		107708	26x1,5	32	21	16	12
		107709	27x2	32	21	16	12
		107710	33x2	40	22,5	16	17
	250	107711	42x2	50	22,5	16	22
		107712	48x2	55	22,5	16	24

Note: If you wish to order a fitting in stainless steel, please change the first two digit from **10..** to **11..**

CLOSURE PLUG WITH EXAGON SOCKET HEAD WITH O-RING AND WASHER
Thread BSP Parallel

Type: **1078..**

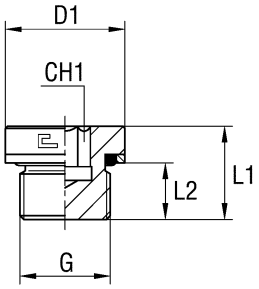

Serie	Bar	Ordering Complete	G	D1	L1	L2	CH1
S	315	107801	1/8	14	12	6,7	5
		107802	1/4	19	17	10,2	6
		107803	3/8	22	17	10,2	8
		107804	1/2	27	19	12,2	10
		107805	3/4	32	21	14,2	12
	200	107806	1	41	22,5	15,4	17
		107807	1 1/4	50	22,5	17,4	22
	160	107808	1 1/2	60	22,5	19,4	24

Note: If you wish to order a fitting in stainless steel, please change the first two digit from **10..** to **11..**
Articles available on request only

CLOSURE PLUG WITH EXAGON SOCKET HEAD WITH O-RING AND WASHER
Thread Metric Parallel

Type: **1079..**

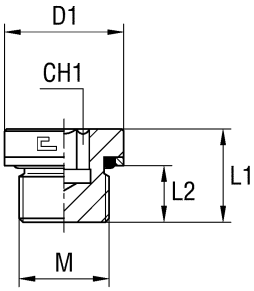

Serie	Bar	Ordering Complete	M	D1	L1	L2	CH1
S	315	107901	10x1	14	12	7,5	5
		107902	12x1,5	17	17	9,6	6
		107903	14x1,5	19	17	9,6	6
		107904	16x1,5	22	17	11,1	8
		107905	18x1,5	24	17	12,6	8
		107906	20x1,5	26	19	12,6	10
		107907	22x1,5	27	19	13,6	10
		107908	27x2	32	21	16,5	12
	160	107909	33x2	40	22,5	16,5	17
		107910	42x2	50	22,5	17	22
		107911	48x2	55	22,5	19,5	24

Note: If you wish to order a fitting in stainless steel, please change the first two digit from **10..** to **11..**
Articles available on request only

BLANKING PLUG FOR TUBE ENDS

Type: **1080…1** Only Body

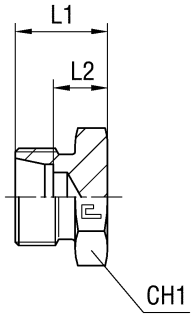

Type: **1080..** B3 Ring

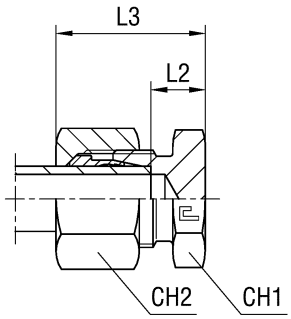

Type: **1080…4** B4 Ring

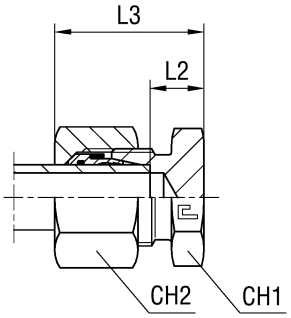

Serie	Bar	Ordering Body	Ordering Equipped B3	Ø Tube	L1	L2	L3	CH1	CH2	Ordering Equipped B4
L	315	108004.1	108004	6	14	7	21,5	12	14	108004.4
		108005.1	108005	8	15	8	23	14	17	108005.4
		108006.1	108006	10	16	9	24	17	19	108006.4
		108007.1	108007	12	17	10	24,5	19	22	108007.4
		108008.1	108008	15	18	11	26	24	27	108008.4
		108009.1	108009	18	19	11,5	28	27	32	108009.4
	160	108010.1	108010	22	21	13,5	30	32	36	108010.4
		108011.1	108011	28	22	14,5	31	41	41	108011.4
		108012.1	108012	35	25	14,5	36	46	50	108012.4
		108013.1	108013	42	27	16	39	55	60	108013.4
S	630	108014.1	108014	6	18	11	26	14	17	108014.4
		108015.1	108015	8	20	13	28	17	19	108015.4
		108016.1	108016	10	20	12,5	28,5	19	22	108016.4
		108017.1	108017	12	22	14,5	30,5	22	24	108017.4
		108018.1	108018	14	24	16	34	24	27	108018.4
	400	108019.1	108019	16	24	15,5	34	27	30	108019.4
		108020.1	108020	20	28	17,5	39	32	36	108020.4
		108021.1	108021	25	32	20	44	41	46	108021.4
		108022.1	108022	30	34	20,5	47	46	50	108022.4
	315	108023.1	108023	38	39	23	54	55	60	108023.4

Note: If you wish to order a fitting in stainless steel, please change the first two digit from **10..** to **11..**

ALLOW SCREW FOR BANJOS Thread BSP Parallel

Type: **1081..**

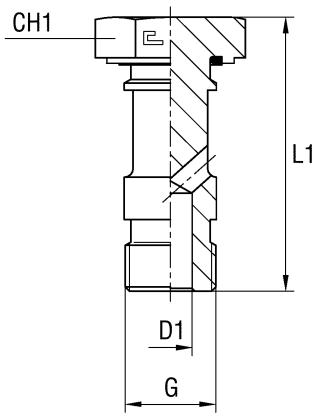

Serie	Bar	Ordering Complete	G	D1	L1	CH1
L/S	-	108101	1/8	4	32	17
		108102	1/4	5	44	19
		108103	3/8	8	50,5	24
		108104	1/2	10	60,5	30
		108105	3/4	14,5	70	36
		108106	1	21	84,5	46
		108107	1 1/4	26	100	55
		108108	1 1/2	30	112	60

Note: If you wish to order a fitting in stainless steel, please change the first two digit from **10..** to **11..**
Articles not included in ISO 8434-1 norm

ALLOW SCREW FOR BANJOS Thread Metric Parallel

Type: **1082..**

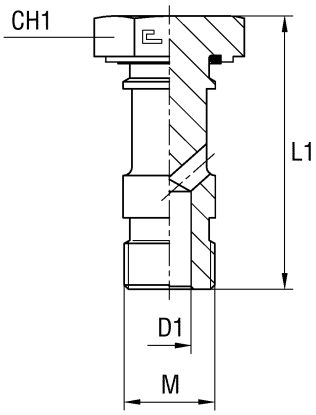

Serie	Bar	Ordering Complete	M	D1	L1	CH1
L/S	-	108201	8x1	3	32	14
		108202	10x1	4	32	17
		108203	12x1,5	4	44	19
		108204	14x1,5	5	44	19
		108205	16x1,5	8	50,5	24
		108206	18x1,5	8	54	27
		108207	20x1,5	10	59	30
		108208	22x1,5	10	60,5	30
		108209	26x1,5	14,5	70	36
		108210	27x2	14,5	70	36
		108211	33x2	21	84,5	46
		108212	42x2	26	100	55
		108213	48x2	30	112	60

Note: If you wish to order a fitting in stainless steel, please change the first two digit from **10..** to **11..**
Articles not included in ISO 8434-1 norm

FEMALE STRAIGHT COUPLING

Type: **1083…1** Only Body

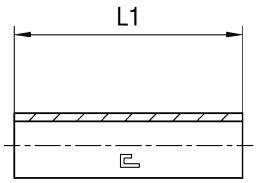

Type: **1083..** B3 Ring

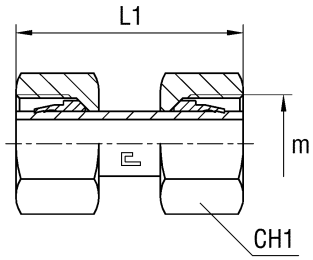

Type: **1083…4** B4 Ring

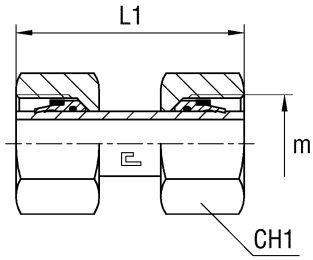

Serie	Bar	Ordering Body	Ordering Equipped B3	Ø Tube	m	L1	CH1	Ordering Equipped B4
L	315	108304.1	108304	6	12x1,5	40	14	108304.4
		108305.1	108305	8	14x1,5	40	17	108305.4
		108306.1	108306	10	16x1,5	42	19	108306.4
		108307.1	108307	12	18x1,5	42	22	108307.4
		108308.1	108308	15	22x1,5	42	27	108308.4
		108309.1	108309	18	26x1,5	45	32	108309.4
	160	108310.1	108310	22	30x2	48	36	108310.4
		108311.1	108311	28	36x2	50	41	108311.4
		108312.1	108312	35	45x2	61	50	108312.4
		108313.1	108313	42	52x2	61	60	108313.4
S	630	108314.1	108314	6	14x1,5	40	17	108314.4
		108315.1	108315	8	16x1,5	40	19	108315.4
		108316.1	108316	10	18x1,5	45	22	108316.4
		108317.1	108317	12	20x1,5	45	24	108317.4
		108318.1	108318	14	22x1,5	48	27	108318.4
	400	108319.1	108319	16	24x1,5	50	30	108319.4
		108320.1	108320	20	30x2	58	36	108320.4
		108321.1	108321	25	36x2	63	46	108321.4
		108322.1	108322	30	42x2	70	50	108322.4
	315	108323.1	108323	38	52x2	78	60	108323.4

Note: If you wish to order a fitting in stainless steel, please change the first two digit from **10..** to **11..**
Articles not included in ISO 8434-1 norm

SEALING WASHER

Type: **1084..**

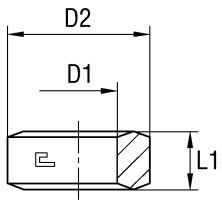

Serie	Bar	Ordering Complete	D1	D2	L1	Filetto Gas
L/S	-	108401	6	11	4,5	1/4
		108402	9	18	5	1/2

Note: If you wish to order a fitting in stainless steel, please change the first two digit from **10..** to **11..**
Articles not included in ISO 8434-1 norm

O-RING SEALING WASHER

Type: **1085..**

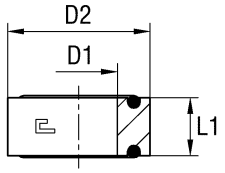

Serie	Bar	Ordering Complete	D1	D2	L1	BSP Thread
L/S	-	108501	6	11	4,5	1/4
		108502	9	18	5	1/2

Note: If you wish to order a fitting in stainless steel, please change the first two digit from **10..** to **11..**
Articles not included in ISO 8434-1 norm

PIPE INSERT

Type: **1086..**

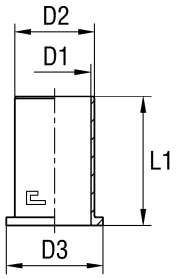

Serie	Bar	Ordering Complete	Ø Tube	D1	D2	D3	L1
L/S	-	108601	6	3	3,9	6	11
		108602	8	5	5,9	8	14
		108603	10	7	7,9	10	15
		108604	12	9	9,9	12	16
		108605	15	12	12,9	15	17
		108606	18	14	14,9	18	20
		108607	20	15	15,9	20	20
		108608	22	16	17,9	22	20
		108609	28	22	23,9	28	23,5
		108610	30	24	25,9	30	23,5
		108611	35	28	30,9	35	26,5

Note: If you wish to order a fitting in stainless steel, please change the first two digit from **10..** to **11..**
Articles not included in ISO 8434-1 norm

EXAGONAL NUT

Type: **1087..**

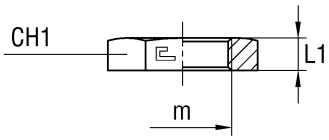

Serie	Bar	Ordering Complete	m	L1	CH1	Ø Tube	Ø Tube
L/S	-	108704	12x1,5	6	17	6L	
		108705	14x1,5	6	19	8L	6S
		108706	16x1,5	6	22	10L	8S
		108707	18x1,5	6	24	12L	10S
		108708	20x1,5	6	27		12S
		108709	22x1,5	7	30	15L	14S
		108710	24x1,5	7	32		16S
		108711	26x1,5	8	36	18L	
		108712	30x2	8	41	22L	20S
		108713	36x2	9	46	28L	25S
		108714	42x2	9	50		30S
		108715	45x2	9	55	35L	
		108716	52x2	10	65	42L	38S

Note: If you wish to order a fitting in stainless steel, please change the first two digit from **10..** to **11..**

MALE STUD COUPLING WITH O-RING AND WASHER
Thread BSP Parallel - Thread Metric Parallel

Type: **1088…1** Only Body
Type: **1089…1** Only Body

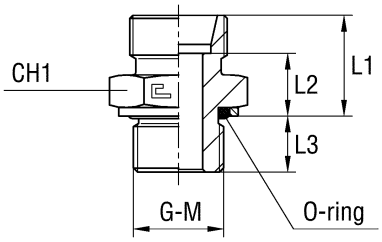

Type: **1088..** B3 Ring
Type: **1089..** B3 Ring

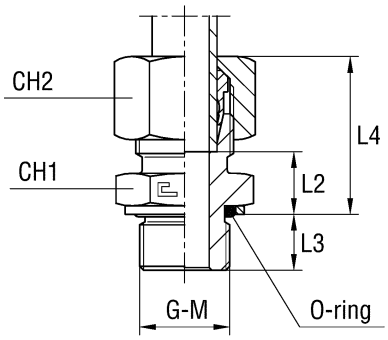

Type: **1088…4** B4 Ring
Type: **1089…4** B4 Ring

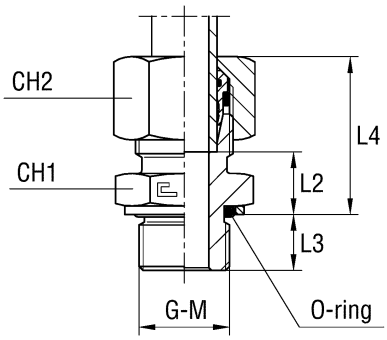

Serie	Bar	Ordering Body	Ordering Equipped B3	Ø Tube	G	L1	L2	L3	L4	CH1	CH2	Ordering Equipped B4
LL	100	108801.1	108801	4	1/8	13,3	9,3	6,7	19,8	14	10	-
		108802.1	108802	6	1/8	13,3	7,8	6,7	19,8	14	12	-
		108803.1	108803	8	1/8	14,3	8,8	6,7	20,8	14	14	-
L	315	108804.1	108804	6	1/8	15,3	8,3	6,7	22,8	14	14	108804.4
		108805.1	108805	8	1/4	16,8	9,8	10,2	24,8	19	17	108805.4
		108806.1	108806	10	1/4	17,8	10,8	10,2	25,8	19	19	108806.4
		108807.1	108807	12	3/8	19,3	12,3	10,2	26,8	22	22	108807.4
		108808.1	108808	15	1/2	20,8	13,8	12,2	28,8	27	27	108808.4
		108809.1	108809	18	1/2	21,8	14,3	12,2	30,8	27	32	108809.4
	160	108810.1	108810	22	3/4	23,8	16,3	14,2	32,8	36	36	108810.4
		108811.1	108811	28	1	25,1	17,6	15,4	34,1	41	41	108811.4
		108812.1	108812	35	1 1/4	28,1	17,6	17,4	39,1	50	50	108812.4
		108813.1	108813	42	1 1/2	30,1	19,1	19,4	42,1	55	60	108813.4
S	400	108814.1	108814	6	1/4	19,8	12,8	10,2	27,8	19	17	108814.4
		108815.1	108815	8	1/4	21,8	14,8	10,2	29,8	19	19	108815.4
	315	108816.1	108816	10	3/8	22,3	14,8	10,2	30,8	22	22	108816.4
		108817.1	108817	12	3/8	24,3	16,8	10,2	32,8	22	24	108817.4
		108818.1	108818	14	1/2	26,8	18,8	12,2	36,8	27	27	108818.4
		108819.1	108819	16	1/2	26,8	18,3	12,2	36,8	27	30	108819.4
		108820.1	108820	20	3/4	30,8	20,3	14,2	41,8	36	36	108820.4
	280	108821.1	108821	25	1	35,1	23,1	15,4	47,1	41	46	108821.4
		108822.1	108822	30	1 1/4	37,1	23,6	17,4	50,1	50	50	108822.4
	250	108823.1	108823	38	1 1/2	42,1	26,1	19,4	57,1	55	60	108823.4

Note: If you wish to order a fitting in stainless steel, please change the first two digit from **10..** to **11..**
Articles available on request only

Serie	Bar	Ordering Body	Ordering Equipped B3	Ø Tube	M	L1	L2	L3	L4	CH1	CH2	Ordering Equipped B4
LL	100	108901.1	108901	4	10x1	13,5	9,5	7,5	20	14	10	-
		108902.1	108902	6	10x1	13,5	8	7,5	20	14	12	-
		108903.1	108903	8	10x1	14,5	9	7,5	21	14	14	-
L	315	108904.1	108904	6	10x1	15,5	8,5	7,5	23	14	14	108904.4
		108905.1	108905	8	12x1,5	16,9	9,9	9,6	24,9	17	17	108905.4
		108906.1	108906	10	14x1,5	17,9	10,9	9,6	25,9	19	19	108906.4
		108907.1	108907	12	16x1,5	19,4	12,4	11,1	26,9	22	22	108907.4
		108908.1	108908	15	18x1,5	20,4	13,4	12,6	28,3	24	27	108908.4
		108909.1	108909	18	22x1,5	21,9	14,4	13,6	30,3	27	32	108909.4
	160	108910.1	108910	22	27x2	24	16,5	16,5	33	32	36	108910.4
		108911.1	108911	28	33x2	25	17,5	16,5	34	41	41	108911.4
		108912.1	108912	35	42x2	28	17,5	17	39	50	50	108912.4
		108913.1	108913	42	48x2	30	19	19,5	42	55	60	108913.4
S	400	108914.1	108914	6	12x1,5	19,9	12,9	9,6	27,9	17	17	108914.4
		108915.1	108915	8	14x1,5	21,9	14,9	9,6	29,9	19	19	108915.4
		108916.1	108916	10	16x1,5	22,4	14,9	11,1	30,9	22	22	108916.4
		108917.1	108917	12	18x1,5	24,4	16,9	12,6	32,9	24	24	108917.4
	315	108918.1	108918	14	20x1,5	26,9	18,9	12,6	36,9	27	27	108918.4
		108919.1	108919	16	22x1,5	26,9	18,4	13,6	36,9	27	30	108919.4
		108920.1	108920	20	27x2	31	20,5	16,5	42	32	36	108920.4
	280	108921.1	108921	25	33x2	35	23	16,5	47	41	46	108921.4
		108922.1	108922	30	42x2	37	23,5	17	50	50	50	108922.4
	250	108923.1	108923	38	48x2	42	26	19,5	57	55	60	108923.4

Note: If you wish to order a fitting in stainless steel, please change the first two digit from **10..** to **11..**
Articles available on request only

O-RING

Type: **0301.. NBR**
Type: **0301.. VITON ®**

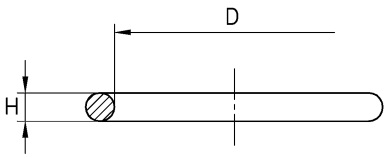

Ordering NBR	Ordering VITON®	D	H	Ordering NBR	Ordering VITON®	D	H	Ordering NBR	Ordering VITON®	D	H
030101	030201	4	1	030124	030224	15	2	030147	030247	30	1
030102	030202	4	1,5	030125	030225	15,3	2,2	030148	030248	32	2,5
030103	030203	6	1	030126	030226	16	1	030149	030249	33,3	2,4
030104	030204	6	1,5	030127	030227	16,3	2,4	030150	030250	35	1
030105	030205	7,5	1,5	030128	030228	16,36	2,2	030151	030251	37,46	3
030106	030206	7,97	1,88	030129	030229	17,86	2,62	030152	030252	37,69	3,53
030107	030207	8	1	030130	030230	18	1	030153	030253	38	1
030108	030208	8,1	1,6	030131	030231	19,18	2,46	030154	030254	38	2,5
030109	030209	8,92	1,83	030132	030232	19,3	2,2	030155	030255	38,6	2,9
030110	030210	9	1,5	030133	030233	20	1	030156	030256	42	1
030111	030211	9,3	2,2	030134	030234	20	2	030157	030257	43,69	3
030112	030212	10	1	030135	030235	20,3	2,4	030158	030258	44,04	3,53
030113	030213	10	2	030136	030236	22	1	030159	030259	44,6	2,9
030114	030214	10,52	1,93	030137	030237	23,47	2,62	030160	030260	55,56	3,53
030115	030215	10,77	2,62	030138	030238	23,47	2,95	030161	030261	60	2,62
030116	030216	11,3	2,2	030139	030239	23,6	2,9	030162	030262	4	0,5
030117	030217	11,9	1,98	030140	030240	25	1	030163	030263	5,5	0,5
030118	030218	12	1	030141	030241	25,3	2,4	030164	030264	7	0,5
030119	030219	12	2	030142	030242	26	2	030165	030265	10	0,5
030120	030220	13,3	2,2	030143	030243	28	1	030166	030266	13	0,5
030121	030221	13,94	2,62	030144	030244	29,6	2,9	030167	030267	16	0,5
030122	030222	14	1	030145	030245	29,74	2,95	030168	030268	48	1
030123	030223	15	1	030146	030246	29,74	3,53	030169	030269	17,3	2,2

ELASTOMER SEAL

Type: **0303.. NBR**
Type: **0304.. VITON ®**

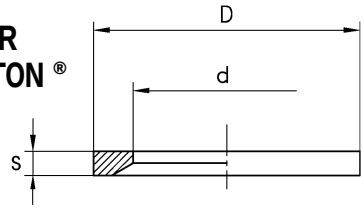

Ordering NBR	Ordering VITON®	M	G	D	d	s
030301	030401	8x1	-	9,9	6,5	1
030302	030402	10x1	1/8	11,4	8,4	1
030303	030403	12x1,5		14,9	9,8	1,5
030304	030404	14x1,5	1/4	16,5	11,6	1,5
030305	030405	16x1,5	-	18,9	13,8	1,5
030306	030406	-	3/8	18,9	14,7	1,5
030307	030407	18x1,5	-	20,9	15,7	1,5
030308	030408	20x1,5	-	22,9	17,8	1,5
030309	030409	-	1/2	23,9	18,5	1,5
030310	030410	22x1,5	-	24,3	19,6	1,5
030311	030411	26x1,5 27x2	3/4	29,2	23,9	1,5
030312	030412	33x2	1	35,7	29,7	2
030313	030413	42x2	1 1/4	45,8	38,8	2
030314	030414	48x2	1 1/2	50,7	44,7	2
030315	030415	-	2	63,5	56,5	2

ELASTOMER SEAL

Type: **0305.. NBR**
Type: **0306.. VITON ®**

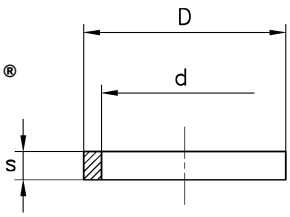

Ordering NBR	Ordering VITON®	Tube	D	d	s
030501	030601	6L	9	7,3	3,5
030502	030602	6S	11	7,3	3,5
030503	030603	8L	11	9,3	3,5
030504	030604	8S	13	9,3	3,5
030505	030605	10L	12	10,5	4
030506	030606	10S	14	10,5	4
030507	030607	12L	13,7	12	4
030508	030608	12S	16	12	4
030509	030609	14S	18,5	15	3
030510	030610	15L	17,5	15	3
030511	030611	16S	19,5	16	3,5
030512	030612	18L	21,5	18	3,5
030513	030613	20S	25	20,6	3,5
030514	030614	22L	25	22	3,5
030515	030615	25S	30,5	25,1	4
030516	030616	28S	30,5	27,5	4
030517	030617	30S	36,5	30,2	3,5
030518	030618	35L	39,5	35,2	4
030519	030619	38S	46,5	38,2	3,5
030520	030620	42L	46,5	42,2	3,5

VITON® is a DuPont Dow Elastomers Trade Mark

ASSEMBLY TOOLS DIN 2353 (ISO 8434-1)

PREASSEMBLY MACHINE			MACHINE MANDREL	MACHINE PLATFORM	MANUAL PREASSEMBLY TOOL	24° CHECK TOOL
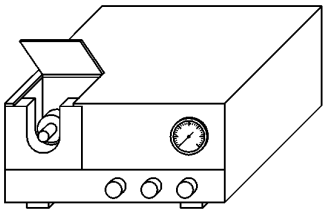			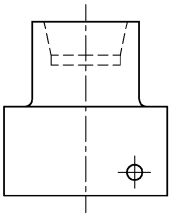	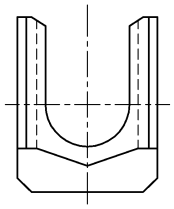	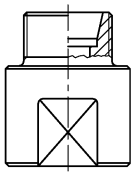	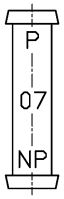
Serie	**Bar**	**Ordering Macchine**	**Ordering Mandrel**	**Ordering Platform**	**Ordering Preassembly tool**	**Ordering 24° check tool**
L	6	100000	100001	100021-83 M	100061	204
	8		100002	100022-83 M	100062	205
	10		100003	100023-83 M	100063	206
	12		100004	100024-83 M	100064	207
	15		100005	100025-83 M	100065	208
	18		100006	100026-83 M	100066	209
	22		100007	100027-83 M	100067	210
	28		100008	100028-83 M	100068	211
	35		100009	100029-83 M	100069	212
	42		100010	100030-83 M	100070	213
S	6	100000	100011	100031-83 M	100071	204
	8		100012	100032-83 M	100072	205
	10		100013	100033-83 M	100073	206
	12		100014	100034-83 M	100074	207
	14		100015	100035-83 M	100075	214
	16		100016	100036-83 M	100076	215
	20		100017	100037-83 M	100077	216
	25		100018	100038-83 M	100078	217
	30		100019	100039-83 M	100079	218
	38		100020	100040-83 M	100080	219

MALE STUD COUPLING WITH SWIVEL NUT AND ELASTOMER SEAL
Thread BSP Parallel - Thread Metric Parallel

Type: **6005..**
Type: **6006..**

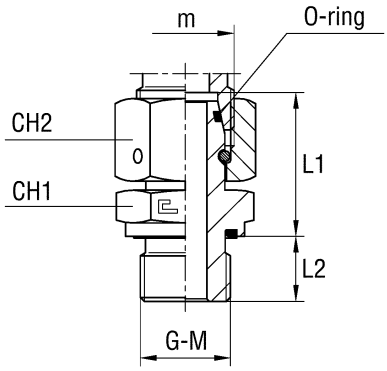

Serie	Bar	Ordering Complete	Ø Tube	m	G	L1	L2	CH1	CH2
L	315	600504	6	12x1,5	1/8	24,5	8	14	14
		600505	8	14x1,5	1/4	29,5	12	19	17
		600506	10	16x1,5	1/4	27,5	12	19	19
		600507	12	18x1,5	3/8	34	12	22	22
		600508	15	22x1,5	1/2	32	14	27	27
		600509	18	26x1,5	1/2	31,5	14	27	32
	160	600510	22	30x2	3/4	32,5	16	32	36
		600511	28	36x2	1	35	18	41	41
		600512	35	45x2	1 1/4	42,5	20	50	50
		600513	42	52x2	1 1/2	46,5	22	55	60
S	630	600514	6	14x1,5	1/4	27	12	19	17
		600515	8	16x1,5	1/4	29,5	12	19	19
		600516	10	18x1,5	3/8	32	12	22	22
		600517	12	20x1,5	3/8	34	12	22	24
		600518	14	22x1,5	1/2	36,5	14	27	27
	400	600519	16	24x1,5	1/2	37	14	27	30
		600520	20	30x2	3/4	43	16	32	36
		600521	25	36x2	1	48	18	41	46
		600522	30	42x2	1 1/4	51	20	50	50
	315	600523	38	52x2	1 1/2	60	22	55	60

Note: If you wish to order a fitting in stainless steel, please change the first two digit from **60..** to **61..**

Serie	Bar	Ordering Completo	Ø Tubo	m	M	L1	L2	CH1	CH2
L	315	600604	6	12x1,5	10x1	24,5	8	14	14
		600605	8	14x1,5	12x1,5	26,5	12	17	17
		600606	10	16x1,5	14x1,5	27,5	12	19	19
		600607	12	18x1,5	16x1,5	30,5	12	22	22
		600608	15	22x1,5	18x1,5	31,5	12	24	27
		600609	18	26x1,5	22x1,5	31,5	14	27	32
	160	600610	22	30x2	26x1,5	32,5	16	32	36
		600611	28	36x2	33x2	35	18	41	41
		600612	35	45x2	42x2	42,5	20	50	50
		600613	42	52x2	48x2	46,5	22	55	60
S	630	600614	6	14x1,5	12x1,5	27	12	17	17
		600615	8	16x1,5	14x1,5	29,5	12	19	19
		600616	10	18x1,5	16x1,5	32	12	22	22
		600617	12	20x1,5	18x1,5	34	12	24	24
		600618	14	22x1,5	20x1,5	36,5	14	27	27
	400	600619	16	24x1,5	22x1,5	37	14	27	30
		600620	20	30x2	27x2	43	16	32	36
		600621	25	36x2	33x2	48	18	41	46
		600622	30	42x2	42x2	51	20	50	50
	315	600623	38	52x2	48x2	60	22	55	60

Note: If you wish to order a fitting in stainless steel, please change the first two digit from **60..** to **61..**

MALE STUD COUPLING WITH SWIVEL NUT O-RING AND WASHER
Thread BSP Parallel - Thread Metric Parallel

Tipo: **6007..**
Tipo: **6008..**

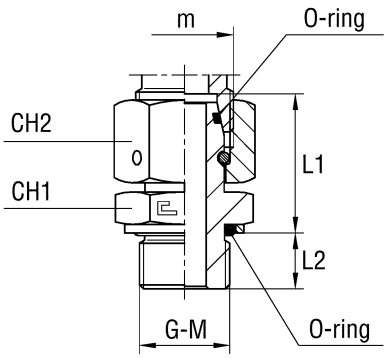

Serie	Bar	Ordering Complete	Ø Tube	m	G	L1	L2	CH1	CH2
L	315	600704	6	12x1,5	1/8	25,8	6,7	14	14
		600705	8	14x1,5	1/4	31,3	10,2	19	17
		600706	10	16x1,5	1/4	29,3	10,2	19	19
		600707	12	18x1,5	3/8	32,2	10,2	22	22
		600708	15	22x1,5	1/2	30,2	12,2	27	27
		600709	18	26x1,5	1/2	33,3	12,2	27	32
	160	600710	22	30x2	3/4	34,3	14,2	36	36
		600711	28	36x2	1	37,6	15,4	41	41
		600712	35	45x2	1 1/4	45,1	17,4	50	50
		600713	42	52x2	1 1/2	49,1	19,4	55	60
S	400	600714	6	14x1,5	1/4	28,8	10,2	19	17
		600715	8	16x1,5	1/4	31,3	10,2	19	19
	315	600716	10	18x1,5	3/8	33,8	10,2	22	22
		600717	12	20x1,5	3/8	35,8	10,2	22	24
		600718	14	22x1,5	1/2	38,3	12,2	27	27
		600719	16	24x1,5	1/2	38,8	12,2	27	30
		600720	20	30x2	3/4	44,8	14,2	36	36
	280	600721	25	36x2	1	50,6	15,4	41	46
		600722	30	42x2	1 1/4	53,6	17,4	50	50
	250	600723	38	52x2	1 1/2	62,6	19,4	55	60

Note: If you wish to order a fitting in stainless steel, please change the first two digit from **60..** to **61..**

Serie	Bar	Ordering Completo	Ø Tube	m	M	L1	L2	CH1	CH2
L	315	600804	6	12x1,5	10x1	25	7,5	14	14
		600805	8	14x1,5	12x1,5	28,9	9,6	17	17
		600806	10	16x1,5	14x1,5	29,9	9,6	19	19
		600807	12	18x1,5	16x1,5	31,4	11,1	22	22
		600808	15	22x1,5	18x1,5	30,9	12,6	24	27
		600809	18	26x1,5	22x1,5	31,9	13,6	27	32
	160	600810	22	30x2	27x2	32	16,5	32	36
		600811	28	36x2	33x2	36,5	16,5	41	41
		600812	35	45x2	42x2	45,5	17	50	50
		600813	42	52x2	48x2	48	19,5	55	60
S	400	600814	6	14x1,5	12x1,5	28,4	9,6	17	17
		600815	8	16x1,5	14x1,5	30,9	9,6	19	19
		600816	10	18x1,5	16x1,5	32,9	11,1	22	22
		600817	12	20x1,5	18x1,5	33,4	12,6	24	24
	315	600818	14	22x1,5	20x1,5	35,1	12,6	27	27
		600819	16	24x1,5	22x1,5	36,6	13,6	27	30
		600820	20	30x2	27x2	42,5	16,5	32	36
	280	600821	25	36x2	33x2	46,5	16,5	41	46
		600822	30	42x2	42x2	52	17	50	50
	250	600823	38	52x2	48x2	62,5	19,5	55	60

Note: If you wish to order a fitting in stainless steel, please change the first two digit from **60..** to **61..**.
Articles available on request only

MALE STUD COUPLING WITH SWIVEL NUT AND O-RING
Thread UNF/UN-2A

Type: **6009..**

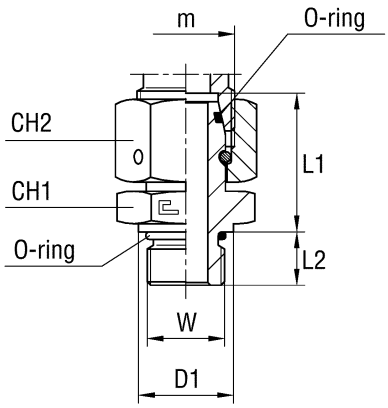

Serie	Bar	Ordering Complete	Ø Tube	m	W	D1	L1	L2	CH1	CH2
L	315	600904	6	12x1,5	7/16-20	13,8	23,4	8	14	14
		600905	8	14x1,5	7/16-20	13,8	32,4	12	14	17
		600906	10	16x1,5	9/16-18	18,8	29,5	12	17	19
		600907	12	18x1,5	3/4-16	21,8	34,9	12	22	22
		600908	15	22x1,5	7/8-14	26,8	33,3	14	27	27
		600909	18	26x1,5	7/8-14	26,8	32,8	14	27	32
	160	600910	22	30x2	11/16-12	31,8	33,4	16	32	36
		600911	28	36x2	15/16-12	40,8	37,9	18	41	41
		600912	35	45x2	15/8-12	49,8	47,4	20	50	50
		600913	42	52x2	17/8-12	54,8	53,4	22	55	60
S	630	600914	6	14x1,5	7/16-20	13,8	29,9	12	14	17
		600915	8	16x1,5	9/16-18	18,8	31,5	12	17	19
		600916	10	18x1,5	9/16-18	18,8	34	12	17	22
		600917	12	20x1,5	3/4-16	21,8	34,9	12	22	24
		600918	14	22x1,5	7/8-14	26,8	37,8	14	27	27
	400	600919	16	24x1,5	7/8-14	26,8	38,3	14	27	30
		600920	20	30x2	11/16-12	31,8	43,9	16	32	36
		600921	25	36x2	15/16-12	40,8	50,9	18	41	46
		600922	30	42x2	15/8-12	49,8	55,9	20	50	50
	315	600923	38	52x2	17/8-12	54,8	66,9	22	55	60

Note: If you wish to order a fitting in stainless steel, please change the first two digit from **60..** to **61..**
Articles available on request only

MALE STUD COUPLING WITH SWIVEL NUT
Thread NPT

Type: **6010..**

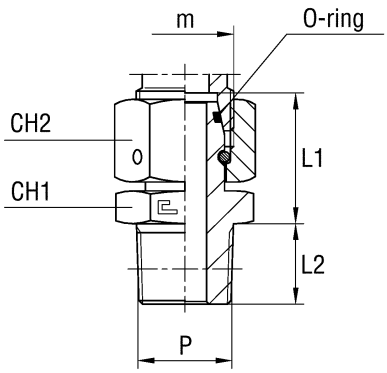

Serie	Bar	Ordering Complete	Ø Tube	m	P	L1	L2	CH1	CH2
L	315	601004	6	12x1,5	1/8	23	10	12	14
		601005	8	14x1,5	1/4	27,5	15	14	17
		601006	10	16x1,5	1/4	25,5	15	14	19
		601007	12	18x1,5	3/8	31,5	15	19	22
		601008	15	22x1,5	1/2	29	19,5	22	27
		601009	18	26x1,5	1/2	28,5	19,5	24	32
	160	601010	22	30x2	3/4	29,5	20	27	36
		601011	28	36x2	1	32	25	36	41
		601012	35	45x2	1 1/4	39,5	25,5	46	50
		601013	42	52x2	1 1/2	43,5	26	50	60
S	630	601014	6	14x1,5	1/4	25	15	14	17
		601015	8	16x1,5	1/4	27,5	15	14	19
		601016	10	18x1,5	3/8	29,5	15	19	22
		601017	12	20x1,5	3/8	31,5	15	19	24
		601018	14	22x1,5	1/2	33,5	19,5	22	27
	400	601019	16	24x1,5	1/2	34	19,5	22	30
		601020	20	30x2	3/4	40	20	27	36
		601021	25	36x2	1	45	25	36	46
		601022	30	42x2	1 1/4	48	25,5	46	50
	315	601023	38	52x2	1 1/2	57	26	50	60

Note: If you wish to order a fitting in stainless steel, please change the first two digit from **60..** to **61..**
Articles available on request only

STRAIGHT COUPLING WITH SWIVEL NUT

Type: **6035..**

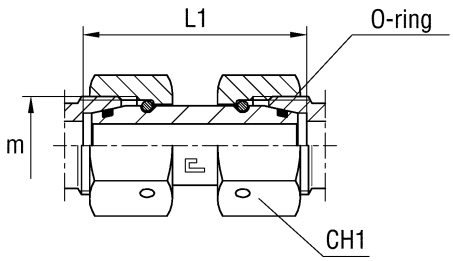

Serie	Bar	Ordering Complete	Ø Tube	m	L1	CH1
L	315	603504	6	12x1,5	40	14
		603505	8	14x1,5	40	17
		603506	10	16x1,5	39	19
		603507	12	18x1,5	39	22
		603508	15	22x1,5	45	27
		603509	18	26x1,5	43	32
	160	603510	22	30x2	48	36
		603511	28	36x2	49	41
		603512	35	45x2	60	50
		603513	42	52x2	60	60
S	630	603514	6	14x1,5	37	17
		603515	8	16x1,5	38	19
		603516	10	18x1,5	44	22
		603517	12	20x1,5	41	24
		603518	14	22x1,5	44	27
	400	603519	16	24x1,5	51	30
		603520	20	30x2	56	36
		603521	25	36x2	60	46
		603522	30	42x2	62	50
	315	603523	38	52x2	70	60

Note: If you wish to order a fitting in stainless steel, please change the first two digit from **60..** to **61..**

ADJUSTABLE MALE STUD ELBOW

Type: **6042…1** Only Body

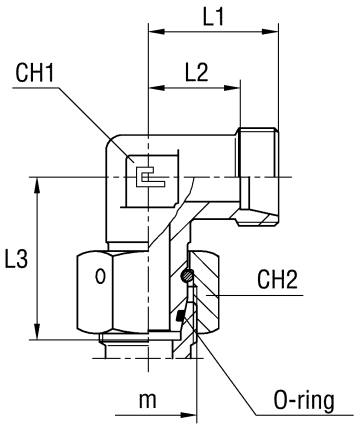

Type: **6042..** B3 Ring

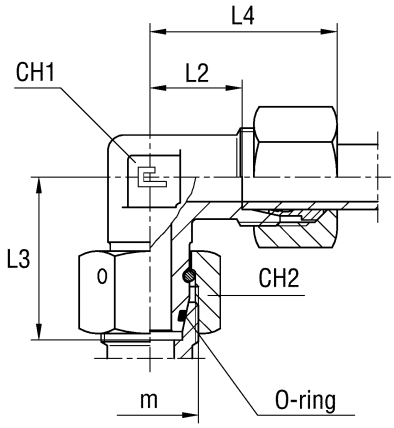

Type: **6042…4** B4 Ring

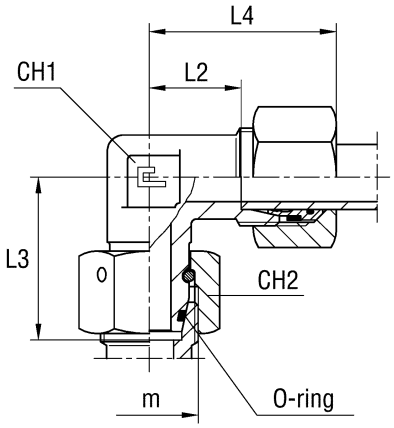

Serie	Bar	Ordering Body	Ordering Equipped B3	Ø Tube	m	L1	L2	L3	L4	CH1	CH2	Ordering Equipped B4
L	315	604204.1	604204	6	12x1,5	19	12	26	27	12	14	604204.4
		604205.1	604205	8	14x1,5	21	14	27,5	29	12	17	604205.4
		604206.1	604206	10	16x1,5	22	15	29	30	14	19	604206.4
		604207.1	604207	12	18x1,5	24	17	29,5	32	17	22	604207.4
		604208.1	604208	15	22x1,5	28	21	32,5	36	19	27	604208.4
		604209.1	604209	18	26x1,5	31	23,5	35,5	40	24	32	604209.4
	160	604210.1	604210	22	30x2	35	27,5	38,5	44	27	36	604210.4
		604211.1	604211	28	36x2	38	30,5	41,5	47	36	41	604211.4
		604212.1	604212	35	45x2	45	34,5	51,5	56	41	50	604212.4
		604213.1	604213	42	52x2	51	40	56	63	50	60	604213.4
S	630	604214.1	604214	6	14x1,5	23	16	27	31	12	17	604214.4
		604215.1	604215	8	16x1,5	24	17	27,5	32	14	19	604215.4
		604216.1	604216	10	18x1,5	25	17,5	30	34	17	22	604216.4
		604217.1	604217	12	20x1,5	29	21,5	31	38	17	24	604217.4
		604218.1	604218	14	22x1,5	30	22	35	40	19	27	604218.4
	400	604219.1	604219	16	24x1,5	33	24,5	36,5	43	24	30	604219.4
		604220.1	604220	20	30x2	37	26,5	44,5	48	27	36	604220.4
		604221.1	604221	25	36x2	42	30	50	54	36	46	604221.4
		604222.1	604222	30	42x2	49	35,5	55,5	62	41	50	604222.4
	315	604223.1	604223	38	52x2	57	41	63	72	50	60	604223.4

Note: If you wish to order a fitting in stainless steel, please change the first two digit from **60..** to **61..**

ADJUSTABLE MALE STUD ELBOW WITH MALE STUD
Thread BSP Parallel - Thread Metric Parallel

Type: **6043...1** Only Body
Type: **6044...1** Only Body

Type: **6043..** B3 Ring
Type: **6044..** Anello B3

Type: **6043...4** B4 Ring
Type: **6044...4** B4 Ring

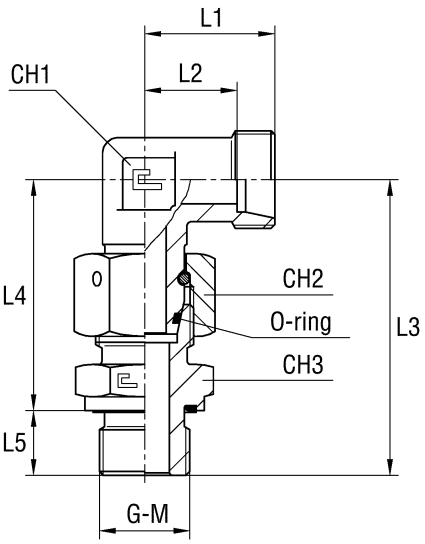

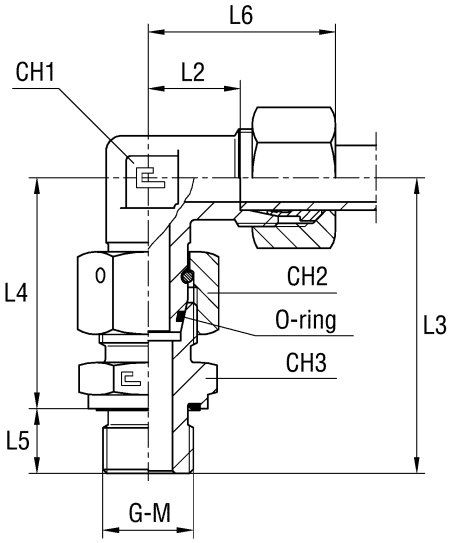

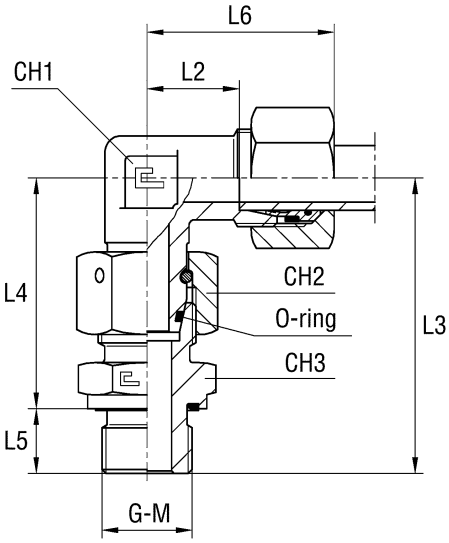

Serie	Bar	Ordering Body	Ordering Equipped B3	Ø Tube	G	L1	L2	L3	L4	L5	L6	CH1	CH2	CH3	Ordering Equipped B4
L	315	604304.1	604304	6	1/8	19	12	42,5	34,5	8	27	12	14	14	604304.4
		604305.1	604305	8	1/4	21	14	49	37	12	29	12	17	19	604305.4
		604306.1	604306	10	1/4	22	15	51,5	39,5	12	30	14	19	19	604306.4
		604307.1	604307	12	3/8	24	17	53,5	41,5	12	32	17	22	22	604307.4
		604308.1	604308	15	1/2	28	21	60	46	14	36	19	27	27	604308.4
		604309.1	604309	18	1/2	31	23,5	63,5	49,5	14	40	24	32	27	604309.4
	160	604310.1	604310	22	3/4	35	27,5	70,5	54,5	16	44	27	36	32	604310.4
		604311.1	604311	28	1	38	30,5	77	59	18	47	36	41	41	604311.4
		604312.1	604312	35	1 1/4	45	34,5	88,5	68,5	20	56	41	50	50	604312.4
		604313.1	604313	42	1 1/2	51	40	97	75	22	63	50	60	55	604313.4
S	630	604314.1	604314	6	1/4	23	16	52	40	12	31	12	17	19	604314.4
		604315.1	604315	8	1/4	24	17	54	42	12	32	14	19	19	604315.4
		604316.1	604316	10	3/8	25	17,5	56,5	44,5	12	34	17	22	22	604316.4
		604317.1	604317	12	3/8	29	21,5	59,5	47,5	12	38	17	24	22	604317.4
		604318.1	604318	14	1/2	30	22	67,5	53,5	14	40	19	27	27	604318.4
	400	604319.1	604319	16	1/2	33	24,5	68,5	54,5	14	43	24	30	27	604319.4
		604320.1	604320	20	3/4	37	26,5	80,5	64,5	16	48	27	36	32	604320.4
		604321.1	604321	25	1	42	30	90,5	72,5	18	54	36	46	41	604321.4
		604322.1	604322	30	1 1/4	49	35,5	98,5	78,5	20	62	41	50	50	604322.4
	315	604323.1	604323	38	1 1/2	57	41	111	89	22	72	50	60	55	604323.4

Note: If you wish to order a fitting in stainless steel, please change the first two digit from **60..** to **61..**

Serie	Bar	Ordering Body	Ordering Equipped B3	Ø Tube	M	L1	L2	L3	L4	L5	L6	CH1	CH2	CH3	Ordering Equipped B4
L	315	604404.1	604404	6	10x1	19	12	42,5	34,5	8	27	12	14	14	604404.4
		604405.1	604405	8	12x1,5	21	14	49	37	12	29	12	17	17	604405.4
		604406.1	604406	10	14x1,5	22	15	51,5	39,5	12	30	14	19	19	604406.4
		604407.1	604407	12	16x1,5	24	17	53,5	41,5	12	32	17	22	22	604407.4
		604408.1	604408	15	18x1,5	28	21	60	45,5	14	36	19	27	24	604408.4
		604409.1	604409	18	22x1,5	31	23,5	63,5	49,5	14	40	24	32	27	604409.4
	160	604410.1	604410	22	26x1,5	35	27,5	70,5	54,5	16	44	27	36	32	604410.4
		604411.1	604411	28	33x2	38	30,5	77	59	18	47	36	41	41	604411.4
		604412.1	604412	35	42x2	45	34,5	88,5	68,5	20	56	41	50	50	604412.4
		604413.1	604413	42	48x2	51	40	97	75	22	63	50	60	55	604413.4
S	630	604414.1	604414	6	12x1,5	23	16	52	40	12	31	12	17	17	604414.4
		604415.1	604415	8	14x1,5	24	17	54	42	12	32	14	19	19	604415.4
		604416.1	604416	10	16x1,5	25	17,5	56,5	44,5	12	34	17	22	22	604416.4
		604417.1	604417	12	18x1,5	29	21,5	59,5	47,5	12	38	17	24	24	604417.4
		604418.1	604418	14	20x1,5	30	22	67,5	53,5	14	40	19	27	27	604418.4
	400	604419.1	604419	16	22x1,5	33	24,5	68,5	54,5	14	43	24	30	27	604419.4
		604420.1	604420	20	27x2	37	26,5	80,5	64,5	16	48	27	36	32	604420.4
		604421.1	604421	25	33x2	42	30	90,5	72,5	18	54	36	46	41	604421.4
		604422.1	604422	30	42x2	49	35,5	98,5	78,5	20	62	41	50	50	604422.4
	315	604423.1	604423	38	48x2	57	41	111	89	22	72	50	60	55	604423.4

Note: If you wish to order a fitting in stainless steel, please change the first two digit from **60..** to **61..**

ADJUSTABLE MALE STUD BARREL TEE

Type: **6046…1** Only Body

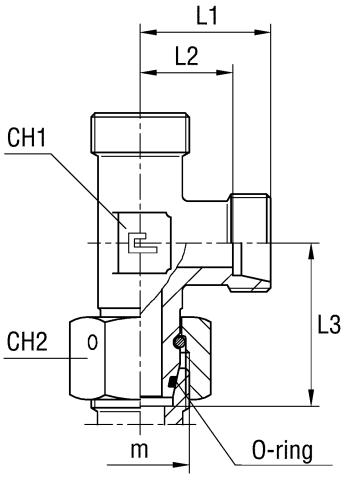

Type: **6046..** B3 Ring

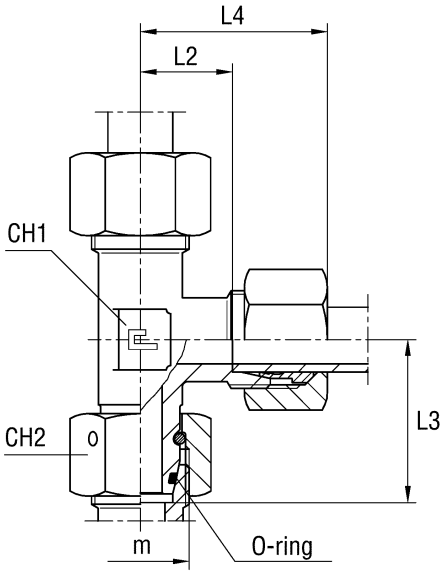

Type: **6046…4** B4 Ring

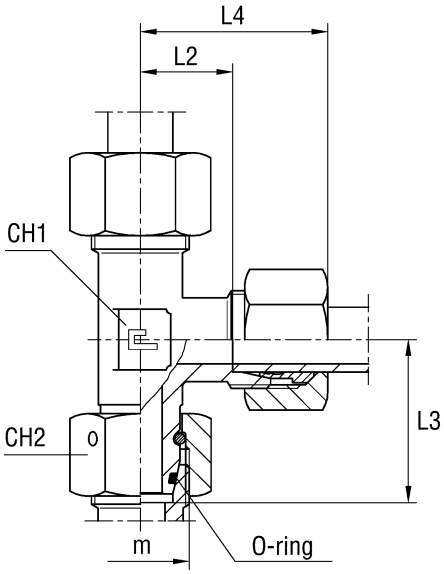

Serie	Bar	Ordering Body	Ordering Equipped B3	Ø Tube	m	L1	L2	L3	L4	CH1	CH2	Ordering Equipped B4
L	315	604604.1	604604	6	12x1,5	19	12	26	27	12	14	604604.4
		604605.1	604605	8	14x1,5	21	14	27,5	29	12	17	604605.4
		604606.1	604606	10	16x1,5	22	15	29	30	14	19	604606.4
		604607.1	604607	12	18x1,5	24	17	29,5	32	17	22	604607.4
		604608.1	604608	15	22x1,5	28	21	32,5	36	19	27	604608.4
		604609.1	604609	18	26x1,5	31	23,5	35,5	40	24	32	604609.4
	160	604610.1	604610	22	30x2	35	27,5	38,5	44	27	36	604610.4
		604611.1	604611	28	36x2	38	30,5	41,5	47	36	41	604611.4
		604612.1	604612	35	45x2	45	34,5	51,5	56	41	50	604612.4
		604613.1	604613	42	52x2	51	40	56	63	50	60	604613.4
S	630	604614.1	604614	6	14x1,5	23	16	27	31	12	17	604614.4
		604615.1	604615	8	16x1,5	24	17	27,5	32	14	19	604615.4
		604616.1	604616	10	18x1,5	25	17,5	30	34	17	22	604616.4
		604617.1	604617	12	20x1,5	29	21,5	31	38	17	24	604617.4
		604618.1	604618	14	22x1,5	30	22	35	40	19	27	604618.4
	400	604619.1	604619	16	24x1,5	33	24,5	36,5	43	24	30	604619.4
		604620.1	604620	20	30x2	37	26,5	44,5	48	27	36	604620.4
		604621.1	604621	25	36x2	42	30	50	54	36	46	604621.4
		604622.1	604622	30	42x2	49	35,5	55,5	62	41	50	604622.4
	315	604623.1	604623	38	52x2	57	41	63	72	50	60	604623.4

Note: If you wish to order a fitting in stainless steel, please change the first two digit from **60..** to **61..**

ADJUSTABLE MALE STUD BARREL TEE WITH MALE STUD
Thread BSP Parallel - Thread Metric Parallel

Type: **6047…1** Only Body
Type: **6048…1** Only Body

Type: **6047..** B3 Ring
Type: **6048..** B3 Ring

Type: **6047…4** B4 Ring
Type: **6048…4** B4 Ring

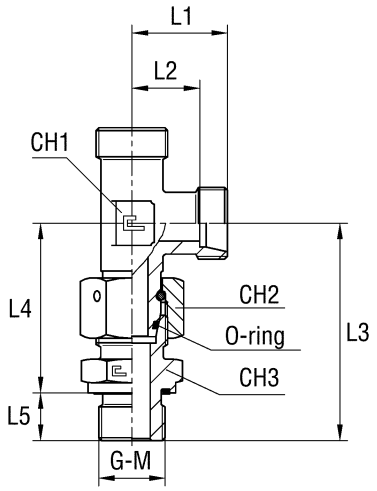

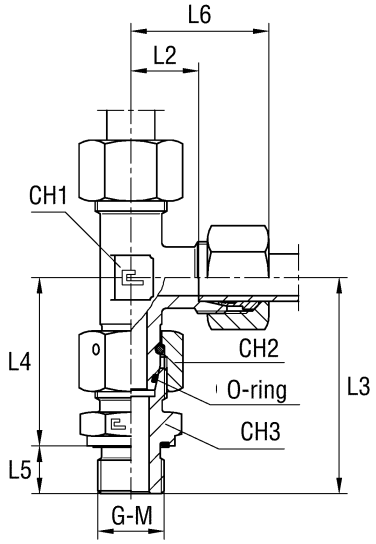

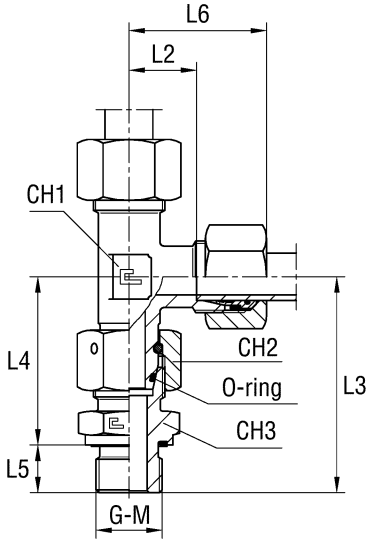

Serie	Bar	Ordering Body	Ordering Equipped B3	Ø Tube	G	L1	L2	L3	L4	L5	L6	CH1	CH2	CH3	Ordering Equipped B4
L	315	604704.1	604704	6	1/8	19	12	61,5	34,5	8	27	12	14	14	604704.4
		604705.1	604705	8	1/4	21	14	66,5	37	12	29	12	17	19	604705.4
		604706.1	604706	10	1/4	22	15	70	39,5	12	30	14	19	19	604706.4
		604707.1	604707	12	3/8	24	17	74	41,5	12	32	17	22	22	604707.4
		604708.1	604708	15	1/2	28	21	82,5	46	14	36	19	27	27	604708.4
		604709.1	604709	18	1/2	31	23,5	90	49,5	14	40	24	32	27	604709.4
	160	604710.1	604710	22	3/4	35	27,5	99	54,5	16	44	27	36	32	604710.4
		604711.1	604711	28	1	38	30,5	106	59	18	47	36	41	41	604711.4
		604712.1	604712	35	1 1/4	45	34,5	124,5	68,5	20	56	41	50	50	604712.4
		604713.1	604713	42	1 1/2	51	40	138	75	22	63	50	60	55	604713.4
S	630	604714.1	604714	6	1/4	23	16	71	40	12	31	12	17	19	604714.4
		604715.1	604715	8	1/4	24	17	74,5	42	12	32	14	19	19	604715.4
		604716.1	604716	10	3/8	25	17,5	79	44,5	12	34	17	22	22	604716.4
		604717.1	604717	12	3/8	29	21,5	86	47,5	12	38	17	24	22	604717.4
		604718.1	604718	14	1/2	30	22	94	53,5	14	40	19	27	27	604718.4
	400	604719.1	604719	16	1/2	33	24,5	98	54,5	14	43	24	30	27	604719.4
		604720.1	604720	20	3/4	37	26,5	113	64,5	16	48	27	36	32	604720.4
		604721.1	604721	25	1	42	30	127	72,5	18	54	36	46	41	604721.4
		604722.1	604722	30	1 1/4	49	35,5	140,5	78,5	20	62	41	50	50	604722.4
	315	604723.1	604723	38	1 1/2	57	41	161	89	22	72	50	60	55	604723.4

Note: If you wish to order a fitting in stainless steel, please change the first two digit from **60..** to **61..**

Serie	Bar	Ordering Body	Ordering Equipped B3	Ø Tube	M	L1	L2	L3	L4	L5	L6	CH1	CH2	CH3	Ordering Equipped B4
L	315	604804.1	604804	6	10x1	8	34,5	61,5	34,5	8	27	12	14	14	604804.4
		604805.1	604805	8	12x1,5	12	37	66,5	37	12	29	12	17	17	604805.4
		604806.1	604806	10	14x1,5	12	39,5	70	39,5	12	30	14	19	19	604806.4
		604807.1	604807	12	16x1,5	12	41,5	74	41,5	12	32	17	22	22	604807.4
		604808.1	604808	15	18x1,5	14	45,5	82,5	45,5	14	36	19	27	24	604808.4
		604809.1	604809	18	22x1,5	14	49,5	90	49,5	14	40	24	32	27	604809.4
	160	604810.1	604810	22	26x1,5	16	54,5	99	54,5	16	44	27	36	32	604810.4
		604811.1	604811	28	33x2	18	59	106	59	18	47	36	41	41	604811.4
		604812.1	604812	35	42x2	20	68,5	124,5	68,5	20	56	41	50	50	604812.4
		604813.1	604813	42	48x2	22	75	138	75	22	63	50	60	55	604813.4
S	630	604814.1	604814	6	12x1,5	12	40	71	40	12	31	12	17	17	604814.4
		604815.1	604815	8	14x1,5	12	42	74,5	42	12	32	14	19	19	604815.4
		604816.1	604816	10	16x1,5	12	44,5	79	44,5	12	34	17	22	22	604816.4
		604817.1	604817	12	18x1,5	12	47,5	86	47,5	12	38	17	24	24	604817.4
		604818.1	604818	14	20x1,5	14	53,5	94	53,5	14	40	19	27	27	604818.4
	400	604819.1	604819	16	22x1,5	14	54,5	98	54,5	14	43	24	30	27	604819.4
		604820.1	604820	20	27x2	16	64,5	113	64,5	16	48	27	36	32	604820.4
		604821.1	604821	25	33x2	18	72,5	127	72,5	18	54	36	46	41	604821.4
		604822.1	604822	30	42x2	20	78,5	140,5	78,5	20	62	41	50	50	604822.4
	315	604823.1	604823	38	48x2	22	89	161	89	22	72	50	60	55	604823.4

Note: If you wish to order a fitting in stainless steel, please change the first two digit from **60..** to **61..**

ADJUSTABLE MALE STUD BRANCH TEE

Type: **6050…1** Only Body

Type: **6050..** B3 Ring

Type: **6050…4** B4 Ring

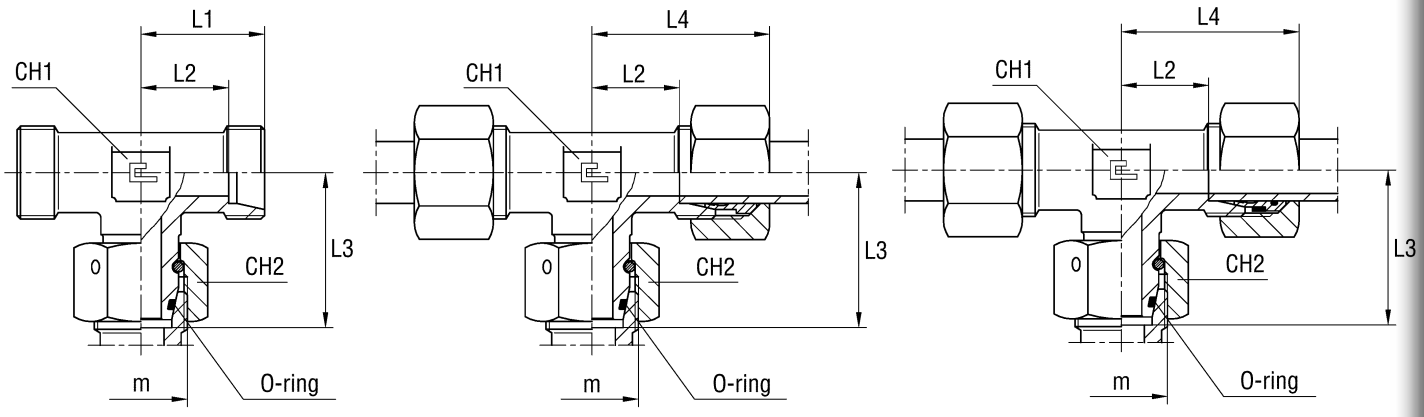

Serie	Bar	Ordering Body	Ordering Equipped B3	Ø Tube	m	L1	L2	L3	L4	CH1	CH2	Ordering Equipped B4
L	315	605004.1	605004	6	12x1,5	19	12	26	27	12	14	605004.4
		605005.1	605005	8	14x1,5	21	14	27,5	29	12	17	605005.4
		605006.1	605006	10	16x1,5	22	15	29	30	14	19	605006.4
		605007.1	605007	12	18x1,5	24	17	29,5	32	17	22	605007.4
		605008.1	605008	15	22x1,5	28	21	32,5	36	19	27	605008.4
		605009.1	605009	18	26x1,5	31	23,5	35,5	40	24	32	605009.4
	160	605010.1	605010	22	30x2	35	27,5	38,5	44	27	36	605010.4
		605011.1	605011	28	36x2	38	30,5	41,5	47	36	41	605011.4
		605012.1	605012	35	45x2	45	34,5	51,5	56	41	50	605012.4
		605013.1	605013	42	52x2	51	40	56	63	50	60	605013.4
S	630	605014.1	605014	6	14x1,5	23	16	27	31	12	17	605014.4
		605015.1	605015	8	16x1,5	24	17	27,5	32	14	19	605015.4
		605016.1	605016	10	18x1,5	25	17,5	30	34	17	22	605016.4
		605017.1	605017	12	20x1,5	29	21,5	31	38	17	24	605017.4
		605018.1	605018	14	22x1,5	30	22	35	40	19	27	605018.4
	400	605019.1	605019	16	24x1,5	33	24,5	36,5	43	24	30	605019.4
		605020.1	605020	20	30x2	37	26,5	44,5	48	27	36	605020.4
		605021.1	605021	25	36x2	42	30	50	54	36	46	605021.4
		605022.1	605022	30	42x2	49	35,5	55,5	62	41	50	605022.4
	315	605023.1	605023	38	52x2	57	41	63	72	50	60	605023.4

Note: If you wish to order a fitting in stainless steel, please change the first two digit from **60..** to **61..**

ADJUSTABLE MALE STUD BRANCH TEE WITH MALE STUD
Thread BSP Parallel - Thread Metric Parallel

Type: **6051...1** Only Body
Type: **6052...1** Only Body

Type: **6051..** B3 Ring
Type: **6052..** B3 Ring

Type: **6051...4** B4 Ring
Type: **6052...4** B4 Ring

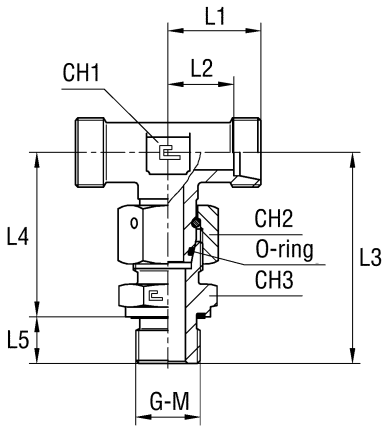

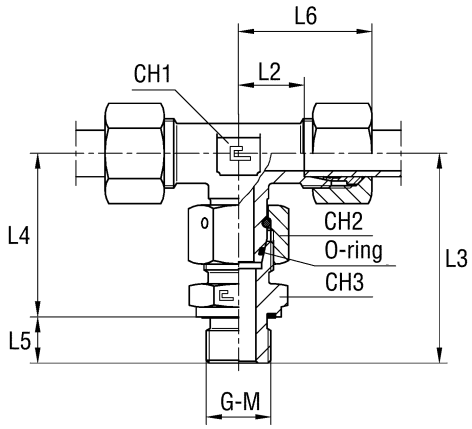

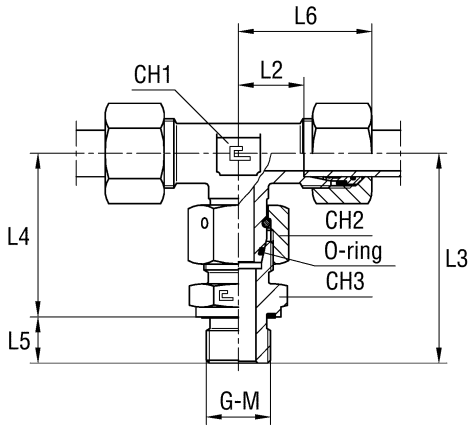

Serie	Bar	Ordering Body	Ordering Equipped B3	Ø Tube	G	L1	L2	L3	L4	L5	L6	CH1	CH2	CH3	Ordering Equipped B4
L	315	605104.1	605104	6	1/8	19	12	42,5	34,5	8	27	12	14	14	605104.4
		605105.1	605105	8	1/4	21	14	49	37	12	29	12	17	19	605105.4
		605106.1	605106	10	1/4	22	15	51,5	39,5	12	30	14	19	19	605106.4
		605107.1	605107	12	3/8	24	17	53,5	41,5	12	32	17	22	22	605107.4
		605108.1	605108	15	1/2	28	21	60	46	14	36	19	27	27	605108.4
		605109.1	605109	18	1/2	31	23,5	63,5	49,5	14	40	24	32	27	605109.4
	160	605110.1	605110	22	3/4	35	27,5	70,5	54,5	16	44	27	36	32	605110.4
		605111.1	605111	28	1	38	30,5	77	59	18	47	36	41	41	605111.4
		605112.1	605112	35	1 1/4	45	34,5	88,5	68,5	20	56	41	50	50	605112.4
		605113.1	605113	42	1 1/2	51	40	97	75	22	63	50	60	55	605113.4
S	630	605114.1	605114	6	1/4	23	16	52	40	12	31	12	17	19	605114.4
		605115.1	605115	8	1/4	24	17	54	42	12	32	14	19	19	605115.4
		605116.1	605116	10	3/8	25	17,5	56,5	44,5	12	34	17	22	22	605116.4
		605117.1	605117	12	3/8	29	21,5	59,5	47,5	12	38	17	24	22	605117.4
		605118.1	605118	14	1/2	30	22	67,5	53,5	14	40	19	27	27	605118.4
	400	605119.1	605119	16	1/2	33	24,5	68,5	54,5	14	43	24	30	27	605119.4
		605120.1	605120	20	3/4	37	26,5	80,5	64,5	16	48	27	36	32	605120.4
		605121.1	605121	25	1	42	30	90,5	72,5	18	54	36	46	41	605121.4
		605122.1	605122	30	1 1/4	49	35,5	98,5	78,5	20	62	41	50	50	605122.4
	315	605123.1	605123	38	1 1/2	57	41	111	89	22	72	50	60	55	605123.4

Note: If you wish to order a fitting in stainless steel, please change the first two digit from **60..** to **61..**

Serie	Bar	Ordering Body	Ordering Equipped B3	Ø Tube	M	L1	L2	L3	L4	L5	L6	CH1	CH2	CH3	Ordering Equipped B4
L	315	605204.1	605204	6	10x1	19	12	42,5	34,5	8	27	12	14	14	605204.4
		605205.1	605205	8	12x1,5	21	14	49	37	12	29	12	17	17	605205.4
		605206.1	605206	10	14x1,5	22	15	51,5	39,5	12	30	14	19	19	605206.4
		605207.1	605207	12	16x1,5	24	17	53,5	41,5	12	32	17	22	22	605207.4
		605208.1	605208	15	18x1,5	28	21	59,5	45,5	14	36	19	27	24	605208.4
		605209.1	605209	18	22x1,5	31	23,5	63,5	49,5	14	40	24	32	27	605209.4
	160	605210.1	605210	22	26x1,5	35	27,5	70,5	54,5	16	44	27	36	32	605210.4
		605211.1	605211	28	33x2	38	30,5	77	59	18	47	36	41	41	605211.4
		605212.1	605212	35	42x2	45	34,5	88,5	68,5	20	56	41	50	50	605212.4
		605213.1	605213	42	48x2	51	40	97	75	22	63	50	60	55	605213.4
S	630	605214.1	605214	6	12x1,5	23	16	52	40	12	31	12	17	17	605214.4
		605215.1	605215	8	14x1,5	24	17	54	42	12	32	14	19	19	605215.4
		605216.1	605216	10	16x1,5	25	17,5	56,5	44,5	12	34	17	22	22	605216.4
		605217.1	605217	12	18x1,5	29	21,5	59,5	47,5	12	38	17	24	24	605217.4
		605218.1	605218	14	20x1,5	30	22	67,5	53,5	14	40	19	27	27	605218.4
	400	605219.1	605219	16	22x1,5	33	24,5	68,5	54,5	14	43	24	30	27	605219.4
		605220.1	605220	20	27x2	37	26,5	80,5	64,5	16	48	27	36	32	605220.4
		605221.1	605221	25	33x2	42	30	90,5	72,5	18	54	36	46	41	605221.4
		605222.1	605222	30	42x2	49	35,5	98,5	78,5	20	62	41	50	50	605222.4
	315	605223.1	605223	38	48x2	57	41	111	89	22	72	50	60	55	605223.4

Note: If you wish to order a fitting in stainless steel, please change the first two digit from **60..** to **61..**

REDUCING TUBE ADAPTER WITH SWIVEL NUT L SERIES

Type: **6053...1** Only Body

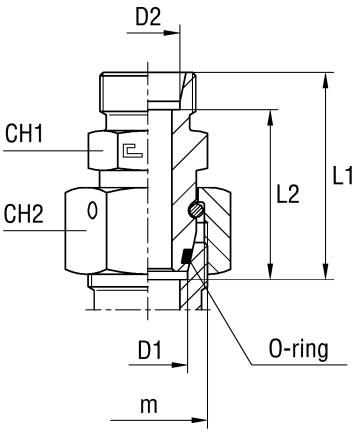

Type: **6053..** B3 Ring

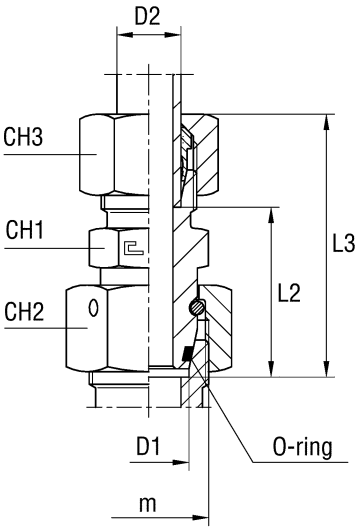

Type: **6053...4** B4 Ring

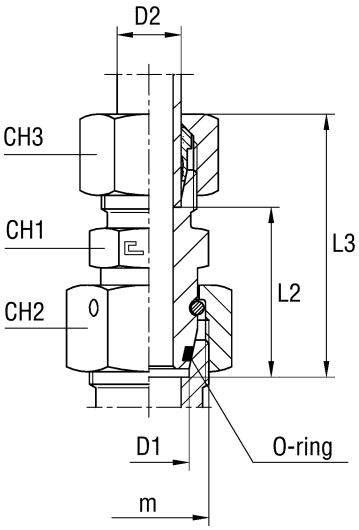

Serie	Bar	Ordering Body	Ordering Equipped B3	D1	D2	m	L1	L2	L3	CH1	CH2	CH3	Ordering Equipped B4
L	315	605301.1	605301	8	6	14x1,5	31	24	38,5	12	17	14	605301.4
		605302.1	605302	10	6	16x1,5	32	25	39,5	14	19	14	605302.4
		605303.1	605303	12	6	18x1,5	32	25	39,5	17	22	14	605303.4
		605304.1	605304	15	6	22x1,5	36	29	43,5	19	27	14	605304.4
		605305.1	605305	18	6	26x1,5	36,5	29,5	44	24	32	14	605305.4
	160	605306.1	605306	22	6	30x2	37,5	30,5	45	27	36	14	605306.4
		605307.1	605307	28	6	36x2	38,5	31,5	46	32	41	14	605307.4
		605308.1	605308	35	6	45x2	44	37	51,5	41	50	14	605308.4
		605309.1	605309	42	6	52x2	45	38	52,5	50	60	14	605309.4
	315	605310.1	605310	10	8	16x1,5	32	25	40	14	19	17	605310.4
		605311.1	605311	12	8	18x1,5	32	25	40	17	22	17	605311.4
		605312.1	605312	15	8	22x1,5	36	29	44	19	27	17	605312.4
		605313.1	605313	18	8	26x1,5	36,5	29,5	44,5	24	32	17	605313.4
	160	605314.1	605314	22	8	30x2	37,5	30,5	45,5	27	36	17	605314.4
		605315.1	605315	28	8	36x2	38,5	31,5	46,5	32	41	17	605315.4
		605316.1	605316	35	8	45x2	44	37	52	41	50	17	605316.4
		605317.1	605317	42	8	52x2	45	38	53	50	60	17	605317.4
	315	605318.1	605318	12	10	18x1,5	33	26	41	17	22	19	605318.4
		605319.1	605319	15	10	22x1,5	37	30	45	19	27	19	605319.4
		605320.1	605320	18	10	26x1,5	37,5	30,5	45,5	24	32	19	605320.4
	160	605321.1	605321	22	10	30x2	38,5	31,5	46,5	27	36	19	605321.4
		605322.1	605322	28	10	36x2	39,5	32,5	57,5	32	41	19	605322.4
		605323.1	605323	35	10	45x2	45	38	53	41	50	19	605323.4
		605324.1	605324	42	10	52x2	46	39	54	50	60	19	605324.4
	315	605325.1	605325	15	12	22x1,5	37	30	44,5	19	27	22	605325.4
		605326.1	605326	18	12	26x1,5	37,5	30,5	45	24	32	22	605326.4
	160	605327.1	605327	22	12	30x2	38,5	31,5	46	27	36	22	605327.4
		605328.1	605328	28	12	36x2	39,5	32,5	47	32	41	22	605328.4
		605329.1	605329	35	12	45x2	45	38	52,5	41	50	22	605329.4
		605330.1	605330	42	12	52x2	46	39	53,5	50	60	22	605330.4
	315	605331.1	605331	18	15	26x1,5	38,5	31,5	46,5	24	32	27	605331.4
	160	605332.1	605332	22	15	30x2	38,5	31,5	46,5	27	36	27	605332.4
		605333.1	605333	28	15	36x2	40,5	33,5	48,5	32	41	27	605333.4
		605334.1	605334	35	15	45x2	46	39	54	41	50	27	605334.4
		605335.1	605335	42	15	52x2	47	40	55	50	60	27	605335.4
		605336.1	605336	22	18	30x2	39,5	32	48,5	27	36	32	605336.4
		605337.1	605337	28	18	36x2	40,5	33	49,5	32	41	32	605337.4
		605338.1	605338	35	18	45x2	46	38,5	55	41	50	32	605338.4
		605339.1	605339	42	18	52x2	47	39,5	56	50	60	32	605339.4
		605340.1	605340	28	22	36x2	42,5	35	51,5	32	41	36	605340.4
		605341.1	605341	35	22	45x2	48	40,5	57	41	50	36	605341.4
		605342.1	605342	42	22	52x2	49	41,5	58	50	60	36	605342.4
		605343.1	605343	35	28	45x2	48	40,5	57	41	50	41	605343.4
		605344.1	605344	42	28	52x2	49	41,5	58	50	60	41	605344.4
		605345.1	605345	42	35	52x2	51	40,5	62	50	60	50	605345.4

Note: If you wish to order a fitting in stainless steel, please change the first two digit from **60..** to **61..**

REDUCING TUBE ADAPTER WITH SWIVEL NUT S SERIES

Type: **6054...1** Only Body

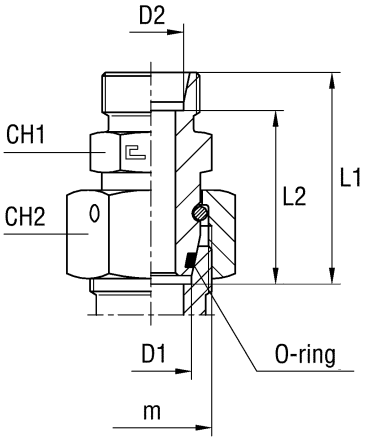

Type: **6054..** B3 Ring

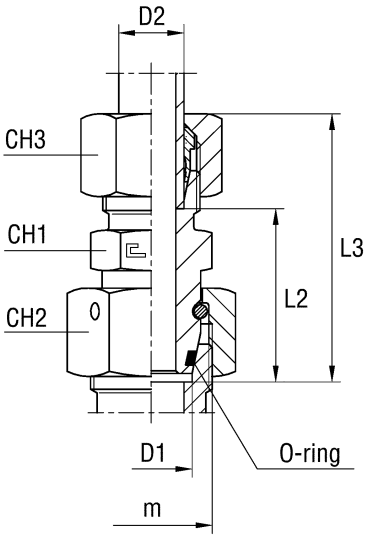

Type: **6054...4** B4 Ring

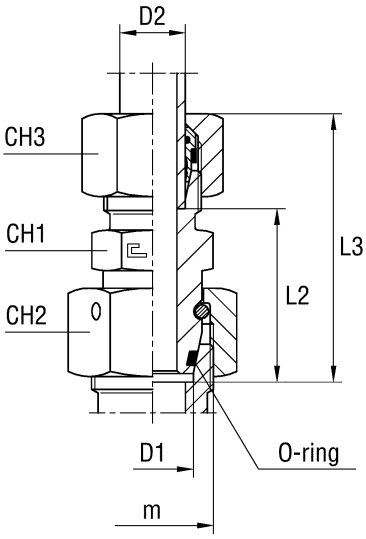

Serie	Bar	Ordering Body	Ordering Equipped B3	D1	D2	m	L1	L2	L3	CH1	CH2	CH3	Ordering Equipped B4
S	630	605401.1	605401	8	6	16x1,5	36	29	44	14	19	17	605401.4
		605402.1	605402	10	6	18x1,5	38,5	31,5	46,5	17	22	17	605402.4
		605403.1	605403	12	6	20x1,5	38	31	46	17	24	17	605403.4
		605404.1	605404	14	6	22x1,5	41	34	49	19	27	17	605404.4
	400	605405.1	605405	16	6	24x1,5	45,5	38,5	53,5	22	30	17	605405.4
		605406.1	605406	20	6	30x2	48	41	56	27	36	17	605406.4
		605407.1	605407	25	6	36x2	52,5	45,5	60,5	32	46	17	605407.4
		605408.1	605408	30	6	42x2	57	50	65	41	50	17	605408.4
	315	605409.1	605409	38	6	52x2	59	52	67	50	60	17	605409.4
	630	605410.1	605410	10	8	18x1,5	38	31	46	17	22	19	605410.4
		605411.1	605411	12	8	20x1,5	38	31	46	17	24	19	605411.4
		605412.1	605412	14	8	22x1,5	41	34	49	19	27	19	605412.4
	400	605413.1	605413	16	8	24x1,5	45,5	38,5	53,5	22	30	19	605413.4
		605414.1	605414	20	8	30x2	48	41	56	27	36	19	605414.4
		605415.1	605415	25	8	36x2	52,5	45,5	60,5	32	46	19	605415.4
		605416.1	605416	30	8	42x2	57	50	65	41	50	19	605416.4
	315	605417.1	605417	38	8	52x2	59	52	67	50	60	19	605417.4
	630	605418.1	605418	12	10	20x1,5	38	30,5	46,5	19	24	22	605418.4
		605419.1	605419	14	10	22x1,5	41	33,5	49,5	19	27	22	605419.4
	400	605420.1	605420	16	10	24x1,5	45,5	38	54	22	30	22	605420.4
		605421.1	605421	20	10	30x2	48	40,5	56,5	27	36	22	605421.4
		605422.1	605422	25	10	36x2	52,5	45	61	32	46	22	605422.4
	250	605423.1	605423	30	10	42x2	57	49,5	65,5	41	50	22	605423.4
		605424.1	605424	38	10	52x2	59	51,5	67,5	50	60	22	605424.4
	630	605425.1	605425	14	12	22x1,5	43	35,5	51,5	22	27	24	605425.4
	400	605426.1	605426	16	12	24x1,5	45,5	38	54	22	30	24	605426.4
		605427.1	605427	20	12	30x2	48	40,5	56,5	27	36	24	605427.4
		605428.1	605428	25	12	36x2	52,5	45	61	32	46	24	605428.4
		605429.1	605429	30	12	42x2	57	49,5	65,5	41	50	24	605429.4
	315	605430.1	605430	38	12	52x2	59	51,5	67,5	50	60	24	605430.4
	400	605431.1	605431	16	14	24x1,5	47,5	39,5	57,5	24	30	27	605431.4
		605432.1	605432	20	14	30x2	50	42	60	27	36	27	605432.4
		605433.1	605433	25	14	36x2	54,5	46,5	64,5	32	46	27	605433.4
	250	605434.1	605434	30	14	42x2	59	51	69	41	50	27	605434.4
		605435.1	605435	38	14	52x2	61	53	71	50	60	27	605435.4
	400	605436.1	605436	20	16	30x2	50	41,5	60	27	36	30	605436.4
		605437.1	605437	25	16	36x2	54,5	46	64,5	32	46	30	605437.4
		605438.1	605438	30	16	42x2	59	50,5	69	41	50	30	605438.4
	315	605439.1	605439	38	16	52x2	61	52,5	71	50	60	30	605439.4
	400	605440.1	605440	25	20	36x2	56,5	46	67,5	32	46	36	605440.4
		605441.1	605441	30	20	42x2	61	50,5	72	41	50	36	605441.4
		605442.1	605442	38	20	52x2	63	52,5	74	50	60	36	605442.4
		605443.1	605443	30	25	42x2	63	51	75	41	50	46	605443.4
	315	605444.1	605444	38	25	52x2	65	53	77	50	60	46	605444.4
		605445.1	605445	38	30	52x2	67	53,5	80	50	60	50	605445.4

Note: If you wish to order a fitting in stainless steel, please change the first two digit from **60..** to **61..**

GAUGE COUPLING WITH SWIVEL NUT
Thread BSP Parallel

Type: **6060..** Complete
With o-ring ferrule

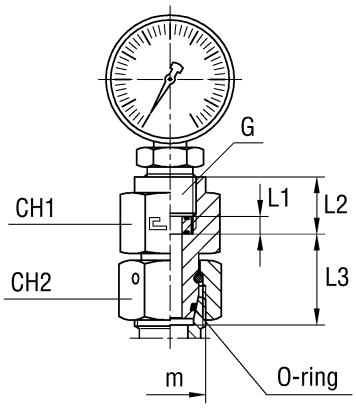

Serie	Bar	Ordering Complete	Ø Tube	G	m	L1	L2	L3	CH1	CH2
L	315	606004	6	1/4	12x1,5	4,5	14,5	21,5	19	14
		606005	8	1/4	14x1,5	4,5	14,5	21,5	19	17
		606006	10	1/4	16x1,5	4,5	14,5	22	19	19
		606007	12	1/4	18x1,5	4,5	14,5	22	19	22
S	630	606014	6	1/2	14x1,5	5	20	23	30	17
		606015	8	1/2	16x1,5	5	20	23,5	30	19
		606016	10	1/2	18x1,5	5	20	24	30	22
		606017	12	1/2	20x1,5	5	20	24	30	24

Note: If you wish to order a fitting in stainless steel, please change the first two digit from **60..** to **61..**
Articles not included in ISO 8434-1 norm available on request only
Gauge not included

SLEEVE

Type: **2001..**

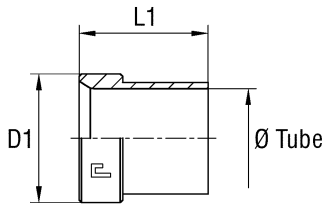

Serie	Bar	Ordering Sleeve	Ø Tube M	Ø Tube W	D1	L1
UNIVERSAL	450	200101	6	1/4	9,7	10,4
		200102	8	5/16*	11,3	11,2
	350	200103	10	3/8	12,7	12,7
		200104	12	1/2	17,3	14,2
		200105	16	5/8*	20,2	16,8
		200106	20	3/4	24,6	17,3
	290	200107	25	1	31	19,8
	240	200108	32	1 1/4	38,9	23,1
		200109	38	1 1/2*	45,3	28,4
	350	200110	14		20,2	16,8
		200111	15		20,2	16,8
		200112	18		24,6	17,3
	240	200113	30		38,9	23,1

Note: If you wish to order a fitting in stainless steel, please change the first two digit from **20..** to **21..**
* Order with metric tube diameter code

TIGHTNING NUT

Tipo: **2002..**

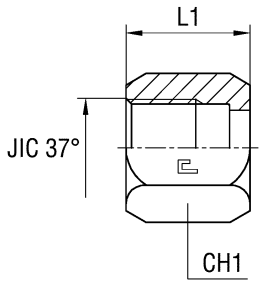

Serie	Bar	Ordering Nut	Ø Tube M	Ø Tubo W	JIC 37°	L1	CH1
UNIVERSALE	450	200201	6	1/4*	7/16-20	15,5	14
		200202	8	5/16*	1/2-20	17	17
	350	200203	10	3/8*	9/16-18	18,3	19
		200204	12	1/2*	3/4-16	21,3	22
		200205	14-15-16	5/8*	7/8-14	24,6	27
		200206	18-20	3/4*	11/16-12	25,9	32
	290	200207	25	1*	15/16-12	28,4	41
	240	200208	30-32	1 1/4*	1 5/8-12	31	50
		200209	38	1 1/2*	1 7/8-12	35,8	60

Note: If you wish to order a fitting in stainless steel, please change the first two digit from **20..** to **21..**
* Order with metric tube diameter code

MALE STUD COUPLING WITH ELASTOMER SEAL Thread BSP Parallel

Type: **2003..** With O-ring

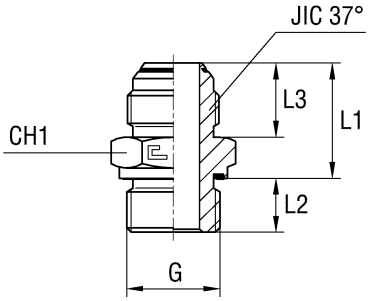

Type: **2003...3** Standard

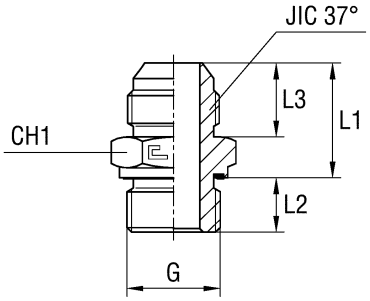

Serie	Bar	Ordering O-ring Body	Ø Tubo M	Ø Tubo W	G	L1	L2	L3	CH1	JIC 37°	Ordering Standard Body
UNIVERSALE	350	200301	6	1/4	1/8	22,5	8	14	14	7/16-20	200301.3
		200302	8	5/16	1/8	22,5	8	14	14	1/2-20	200302.3
		200303	10	3/8	1/4	22,5	12	14,1	19	9/16-18	200303.3
		200304	12	1/2	3/8	26,5	12	16,7	22	3/4-16	200304.3
		200305	14-15-16	5/8	1/2	31	14	19,3	27	7/8-14	200305.3
		200306	18-20	3/4	3/4	35	16	21,9	32	11/16-12	200306.3
	290	200307	25	1	1	37,5	18	23,1	41	15/16-12	200307.3
	240	200308	30-32	1 1/4	1 1/4	41	20	24,3	50	1 5/8-12	200308.3
		200309	38	1 1/2	1 1/2	45	22	27,5	55	1 7/8-12	200309.3
	350	200310	6	1/4	1/4	22,5	12	14	19	7/16-20	200310.3
		200311	6	1/4	3/8	24	12	14	22	7/16-20	200311.3
		200312	6	1/4	1/2	25,5	14	14	27	7/16-20	200312.3
		200313	8	5/16	1/4	22,5	12	14	19	1/2-20	200313.3
		200314	8	5/16	3/8	24	12	14	22	1/2-20	200314.3
		200315	10	3/8	1/8	23	8	14,1	17	9/16-18	200315.3
		200316	10	3/8	3/8	24	12	14,1	22	9/16-18	200316.3
		200317	10	3/8	1/2	26	14	14,1	27	9/16-18	200317.3
		200318	12	1/2	1/4	26	12	16,7	22	3/4-16	200318.3
		200319	12	1/2	1/2	28,5	14	16,7	27	3/4-16	200319.3
		200320	12	1/2	3/4	30	16	16,7	32	3/4-16	200320.3
		200321	14-15-16	5/8	3/8	30,5	12	19,3	24	7/8-14	200321.3
		200322	14-15-16	5/8	3/4	32,5	16	19,3	32	7/8-14	200322.3
		200323	18-20	3/4	3/8	34,5	12	21,9	30	11/16-12	200323.3
		200324	18-20	3/4	1/2	35	14	21,9	30	11/16-12	200324.3
	290	200325	18-20	3/4	1	36,5	18	21,9	41	11/16-12	200325.3
		200326	25	1	3/4	37,5	16	23,1	36	15/16-12	200326.3
	240	200327	25	1	1 1/4	40	20	23,1	50	15/16-12	200327.3
		200328	30-32	1 1/4	1	41	18	24,3	46	1 5/8-12	200328.3
		200329	30-32	1 1/4	1 1/2	42	22	24,3	55	1 5/8-12	200329.3
		200330	38	1 1/2	1 1/4	44	20	27,5	50	1 7/8-12	200330.3

Note: If you wish to order a fitting in stainless steel, please change the first two digit from **20..** to **21..**

MALE STUD COUPLING WITH ELASTOMER SEAL Thread Metric Parallel

Type: **2004..** With O-ring

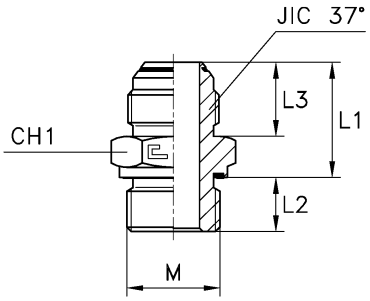

Type: **2004...3** Standard

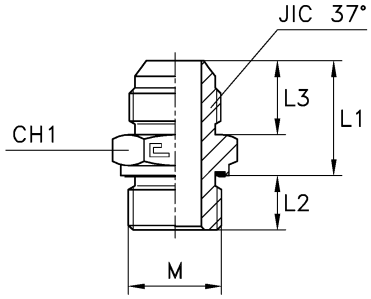

Serie	Bar	Ordering O-ring Body	Ø Tube M	Ø Tube W	M	L1	L2	L3	CH1	JIC 37°	Ordering Standard Body
UNIVERSAL	350	200401	6	1/4	10x1	21	8	14	14	7/16-20	200401.3
		200402	8	5/16	12x1,5	21	12	14	17	1/2-20	200402.3
		200403	10	3/8	14x1,5	21	12	14,1	19	9/16-18	200403.3
		200404	12	1/2	16x1,5	24	12	16,7	22	3/4-16	200404.3
		200405	14-15-16	5/8	22x1,5	29,5	14	19,3	27	7/8-14	200405.3
		200406	18-20	3/4	27x2	32,5	16	21,9	32	11/16-12	200406.3
	290	200407	25	1	33x2	34,5	18	23,1	41	15/16-12	200407.3
	240	200408	30-32	11/4	42x2	38	20	24,3	50	15/8-12	200408.3
		200409	38	11/2	48x2	41,5	22	27,5	55	17/8-12	200409.3
	350	200410	6	1/4	12x1,5	21	12	14	17	7/16-20	200410.3
		200411	8	5/16	10x1	21	8	14	14	1/2-20	200411.3
		200412	8	5/16	14x1,5	21	12	14	19	1/2-20	200412.3
		200413	10	3/8	16x1,5	21,5	12	14,1	22	9/16-18	200413.3
		200414	12	1/2	14x1,5	24	12	16,7	19	3/4-16	200414.3
		200415	12	1/2	18x1,5	25,5	12	16,7	24	3/4-16	200415.3
		200416	14-15-16	5/8	18x1,5	28	12	19,3	24	7/8-14	200416.3
		200417	14-15-16	5/8	20x1,5	29	14	19,3	27	7/8-14	200417.3
		200418	18-20	3/4	22x1,5	32,5	14	21,9	30	11/16-12	200418.3
	290	200419	25	1	27x2	34,5	16	23,1	36	15/16-12	200419.3

Note: If you wish to order a fitting in stainless steel, please change the first two digit from **20..** to **21..**
Articles available on scheduled orders only

MALE STUD COUPLING WITH O-RING Thread UNF/UN-2A

Type: **2005..** With O-ring

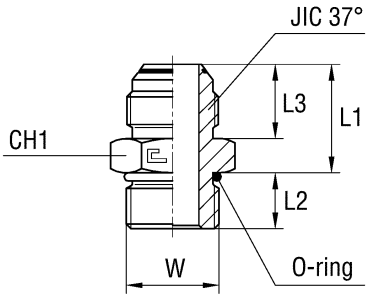

Type: **2005...3** Standard

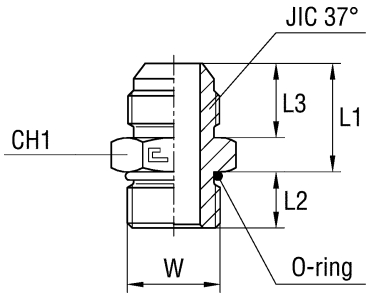

Serie	Bar	Ordering O-ring Body	Ø Tube M	Ø Tube W	W	L1	L2	L3	CH1	JIC 37°	Ordering Standard Body
UNIVERSAL	400	200501	6	1/4	7/16-20	21,9	9,1	14	14	7/16-20	200501.3
		200502	8	5/16	1/2-20	21,9	9,1	14	17	1/2-20	200502.3
	350	200503	10	3/8	9/16-18	23	10	14,1	17	9/16-18	200503.3
		200504	12	1/2	3/4-16	26,4	11,1	16,7	22	3/4-16	200504.3
		200505	14-15-16	5/8	7/8-14	30,3	12,7	19,3	27	7/8-14	200505.3
		200506	18-20	3/4	11/16-12	34,9	15,1	21,9	32	11/16-12	200506.3
	290	200507	25	1	15/16-12	36,4	15,1	23,1	41	15/16-12	200507.3
	240	200508	30-32	11/4	15/8-12	39,9	15,1	24,3	50	15/8-12	200508.3
		200509	38	11/2	17/8-12	44,9	15,1	27,5	55	17/8-12	200509.3
	400	200510	6	1/4	1/2-20	21,9	9,1	14	17	7/16-20	200510.3
	350	200511	6	1/4	9/16-18	23	10	14	17	7/16-20	200511.3
		200512	6	1/4	3/4-16	23,9	11,1	14	22	7/16-20	200512.3
		200513	8	5/16	9/16-18	23	10	14	17	1/2-20	200513.3
		200514	10	3/8	7/16-20	22,9	9,1	14,1	17	9/16-18	200514.3
		200515	10	3/8	1/2-20	22,9	9,1	14,1	17	9/16-18	200515.3
		200516	10	3/8	3/4-16	23,9	11,1	14,1	22	9/16-18	200516.3
		200517	10	3/8	7/8-14	25,3	12,7	14,1	27	9/16-18	200517.3
		200518	12	1/2	9/16-18	26,5	10	16,7	22	3/4-16	200518.3
		200519	12	1/2	7/8-14	27,8	12,7	16,7	27	3/4-16	200519.3
		200520	12	1/2	11/16-12	29,9	15,1	16,7	32	3/4-16	200520.3
		200521	14-15-16	5/8	3/4-16	30,4	11,1	19,3	24	7/8-14	200521.3
		200522	14-15-16	5/8	11/16-12	32,4	15,1	19,3	32	7/8-14	200522.3
		200523	18-20	3/4	3/4-16	33,9	11,1	21,9	30	11/16-12	200523.3
		200524	18-20	3/4	7/8-14	33,8	12,7	21,9	30	11/16-12	200524.3
	290	200525	18-20	3/4	15/16-12	35,4	15,1	21,9	41	11/16-12	200525.3
		200526	25	1	7/8-14	36,3	12,7	23,1	36	15/16-12	200526.3
		200527	25	1	11/16-12	36,4	15,1	23,1	36	15/16-12	200527.3
	240	200528	25	1	15/8-12	38,9	15,1	23,1	50	15/16-12	200528.3
		200529	30-32	11/4	15/16-12	38,9	15,1	24,3	46	15/8-12	200529.3
		200530	38	11/2	15/8-12	42,9	15,1	27,5	50	17/8-12	200530.3

Note: If you wish to order a fitting in stainless steel, please change the first two digit from **20..** to **21..**

FEMALE STUD COUPLING Thread BSP Parallel

Type: **2006..** With O-ring

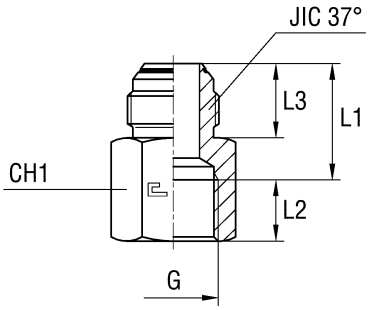

Type: **2006...3** Standard

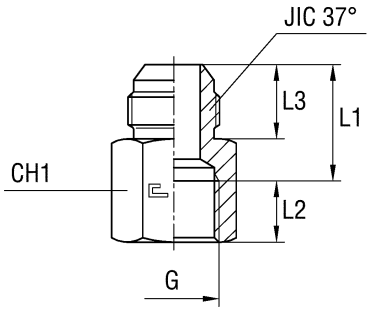

Serie	Bar	Ordering O-ring Body	Ø Tube M	Ø Tube W	G	L1	L2	L3	CH1	JIC 37°	Ordering Standard Body
UNIVERSAL	350	200601	6	1/4	1/8	20	10	14	14	7/16-20	200601.3
		200602	8	5/16	1/8	20	10	14	14	1/2-20	200602.3
		200603	10	3/8	1/4	21	14	14,1	19	9/16-18	200603.3
		200604	12	1/2	3/8	25	14	16,7	22	3/4-16	200604.3
		200605	14-15-16	5/8	1/2	28,5	17	19,3	30	7/8-14	200605.3
		200606	18-20	3/4	3/4	32	19	21,9	36	11/16-12	200606.3
	290	200607	25	1	1	32,5	21,5	23,1	41	15/16-12	200607.3
	240	200608	30-32	1 1/4	1 1/4	37	23,5	24,3	50	1 5/8-12	200608.3
		200609	38	1 1/2	1 1/2	40	25,5	27,5	60	1 7/8-12	200609.3
	350	200610	6	1/4	1/4	21	14	14	19	7/16-20	200610.3
		200611	8	5/16	1/4	21	14	14	19	1/2-20	200611.3
		200612	10	3/8	3/8	22	14	14,1	22	9/16-18	200612.3
		200613	10	3/8	1/2	23,5	17	14,1	30	9/16-18	200613.3
		200614	12	1/2	1/4	25	14	16,7	22	3/4-16	200614.3
		200615	12	1/2	1/2	26	17	16,7	30	3/4-16	200615.3
		200616	18-20	3/4	1/2	31	17	21,9	30	11/16-12	200616.3
	240	200617	30-32	1 1/4	1	34	21,5	24,3	46	1 5/8-12	200617.3
		200618	38	1 1/2	1 1/4	40,5	23,5	27,5	50	1 7/8-12	200618.3

Note: If you wish to order a fitting in stainless steel, please change the first two digit from **20..** to **21..**

FEMALE STUD COUPLING Thread NPT

Type: **2007..** With O-ring

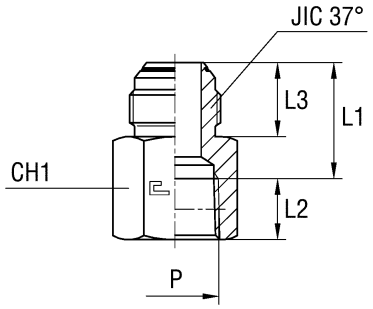

Type: **2007...3** Standard

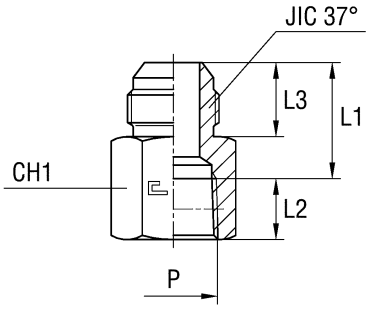

Serie	Bar	Ordering O-ring Body	Ø Tube M	Ø Tube W	G	L1	L2	L3	CH1	JIC 37°	Ordering Standard Body
UNIVERSAL	350	200701	6	1/4	1/8	20,5	9,5	14	14	7/16-20	200701.3
		200702	8	5/16	1/8	20,5	9,5	14	14	1/2-20	200702.3
		200703	10	3/8	1/4	21,5	14	14,1	19	9/16-18	200703.3
		200704	12	1/2	3/8	25	14,5	16,7	22	3/4-16	200704.3
		200705	14-15-16	5/8	1/2	29	19	19,3	30	7/8-14	200705.3
		200706	18-20	3/4	3/4	32,5	19,5	21,9	36	11/16-12	200706.3
	290	200707	25	1	1	36	23,5	23,1	41	15/16-12	200707.3
	240	200708	30-32	1 1/4	1 1/4	39,5	24	24,3	50	1 5/8-12	200708.3
		200709	38	1 1/2	1 1/2	42,5	24	27,5	60	1 7/8-12	200709.3
	350	200710	6	1/4	1/4	21,5	14	14	19	7/16-20	200710.3
		200711	8	5/16	1/4	21,5	14	14	19	1/2-20	200711.3
		200712	10	3/8	3/8	22,5	14,5	14,1	22	9/16-18	200712.3
		200713	12	1/2	1/4	25,5	14	16,7	22	3/4-16	200713.3
		200714	12	1/2	1/2	26,5	19	16,7	30	3/4-16	200714.3
		200715	18-20	3/4	1/2	32	19	21,9	30	11/16-12	200715.3

Note: If you wish to order a fitting in stainless steel, please change the first two digit from **20..** to **21..**
Articles available on scheduled orders only

MALE STUD COUPLING Thread BSP Taper

Type: **2008..** With O-ring

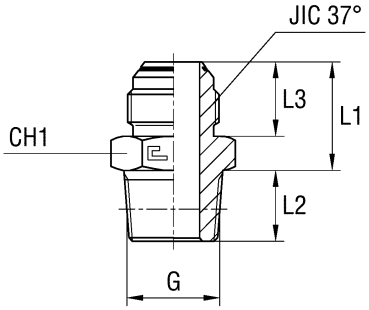

Type: **2008…3** Standard

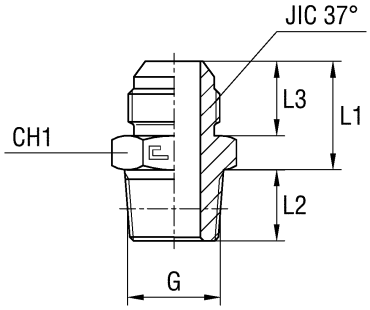

Serie	Bar	Ordering O-ring Body	Ø Tube M	Ø Tube W	G	L1	L2	L3	CH1	JIC 37°	Ordering Standard Body
UNIVERSAL	350	200801	6	1/4	1/8	21	10	14	14	7/16-20	200801.3
		200802	8	5/16	1/8	21	10	14	14	1/2-20	200802.3
		200803	10	3/8	1/4	22	14,5	14,1	17	9/16-18	200803.3
		200804	12	1/2	3/8	24,5	14,5	16,7	22	3/4-16	200804.3
		200805	14-15-16	5/8	1/2	29	19	19,6	24	7/8-14	200805.3
		200806	18-20	3/4	3/4	33,5	19	21,9	30	11/16-12	200806.3
	290	200807	25	1	1	34,5	24	23,1	36	15/16-12	200807.3
	240	200808	30-32	11/4	11/4	37	25	24,3	46	15/8-12	200808.3
		200809	38	11/2	11/2	42	26	27,5	50	17/8-12	200809.3
	350	200810	6	1/4	1/4	21	14,5	14	14	7/16-20	200810.3
		200811	8	5/16	1/4	21	14,5	14	14	1/2-20	200811.3
		200812	10	3/8	1/8	22	10	14,1	17	9/16-18	200812.3
		200813	10	3/8	3/8	22	14,5	14,1	17	9/16-18	200813.3
		200814	10	3/8	1/2	22	19	14,1	22	9/16-18	200814.3
		200815	12	1/2	1/4	24,5	14,5	16,7	22	3/4-16	200815.3
		200816	12	1/2	1/2	24,5	19	16,7	22	3/4-16	200816.3
		200817	12	1/2	3/4	27	19	16,7	27	3/4-16	200817.3
		200818	14-15-16	5/8	3/8	29	14,5	19,3	24	7/8-14	200818.3
		200819	14-15-16	5/8	3/4	29,5	19	19,3	27	7/8-14	200819.3
		200820	18-20	3/4	1/2	33,5	19	21,9	30	11/16-12	200820.3
	290	200821	18-20	3/4	1	33,5	24	21,9	36	11/16-12	200821.3
		200822	25	1	3/4	34,5	19	23,1	36	15/16-12	200822.3
	240	200823	30-32	11/4	1	37,5	24	24,3	46	15/8-12	200823.3
		200824	38	11/2	11/4	42,5	25	27,5	50	17/8-12	200824.3

Note: If you wish to order a fitting in stainless steel, please change the first two digit from **20..** to **21..**

MALE STUD COUPLING Thread NPT

Type: **2009..** With O-ring

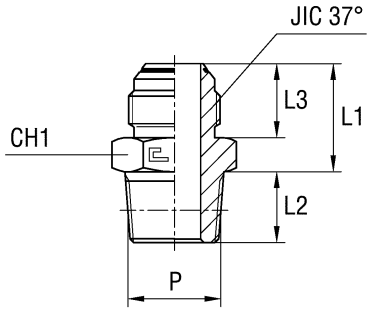

Type: **2009...3** Standard

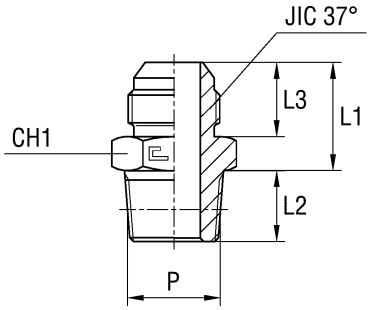

Serie	Bar	Ordering O-ring Body	Ø Tube M	Ø Tube W	P	L1	L2	L3	CH1	JIC 37°	Ordering Standard Body
UNIVERSAL	350	200901	6	1/4	1/8	21	10	14	14	7/16-20	200901.3
		200902	8	5/16	1/8	21	10	14	14	1/2-20	200902.3
		200903	10	3/8	1/4	22	14,5	14,1	17	9/16-18	200903.3
		200904	12	1/2	3/8	24,5	14,5	16,7	22	3/4-16	200904.3
		200905	14-15-16	5/8	1/2	29	19	19,6	24	7/8-14	200905.3
		200906	18-20	3/4	3/4	33,5	19	21,9	30	11/16-12	200906.3
	290	200907	25	1	1	34,5	24	23,1	36	15/16-12	200907.3
	240	200908	30-32	11/4	11/4	37	25	24,3	46	15/8-12	200908.3
		200909	38	11/2	11/2	42	24	27,5	50	17/8-12	200909.3
	350	200910	6	1/4	1/4	21	14,5	14	14	7/16-20	200910.3
		200911	6	1/4	3/8	22	14,5	14	17	7/16-20	200911.3
		200912	6	1/4	1/2	22	19	14	22	7/16-20	200912.3
		200913	8	5/16	1/4	21	14,5	14	14	1/2-20	200913.3
		200914	10	3/8	1/8	22	10	14,1	17	9/16-18	200914.3
		200915	10	3/8	3/8	22	14,5	14,1	17	9/16-18	200915.3
		200916	10	3/8	1/2	22	19	14,1	22	9/16-18	200916.3
		200917	12	1/2	1/4	24,5	14,5	16,7	22	3/4-16	200917.3
		200918	12	1/2	1/2	24,5	19	16,7	22	3/4-16	200918.3
		200919	12	1/2	3/4	27	19	16,7	27	3/4-16	200919.3
		200920	14-15-16	5/8	3/8	29	14,5	19,3	24	7/8-14	200920.3
		200921	14-15-16	5/8	3/4	29,5	19	19,3	27	7/8-14	200921.3
		200922	18-20	3/4	1/2	33,5	19	21,9	30	11/16-12	200922.3
	290	200923	18-20	3/4	1	33,5	24	21,9	36	11/16-12	200923.3
		200924	25	1	3/4	34,5	19	23,1	36	15/16-12	200924.3
	240	200925	30-32	11/4	1	37	24	24,3	46	15/8-12	200925.3
		200926	38	11/2	11/4	42,5	25	27,5	50	17/8-12	200926.3

Note: If you wish to order a fitting in stainless steel, please change the first two digit from **20..** to **21..**

MALE STUD ELBOW Thread BSP Taper

Type: **2010..** With O-ring

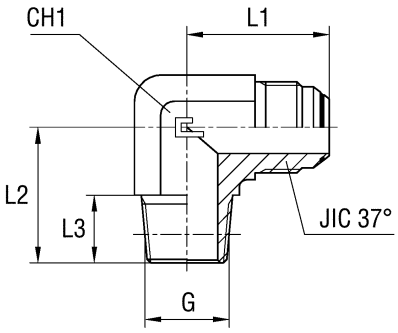

Type: **2010...3** Standard

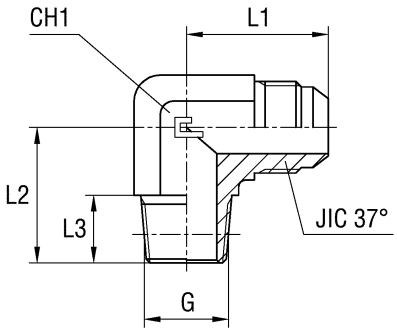

Serie	Bar	Ordering O-ring Body	Ø Tube M	Ø Tube W	G	L1	L2	L3	CH1	JIC 37°	Ordering Standard Body
UNIVERSAL	350	201001	6	1/4	1/8	23	20	10	11	7/16-20	201001.3
		201002	8	5/16	1/8	24	20	10	14	1/2-20	201002.3
		201003	10	3/8	1/4	27,5	28	14,5	14	9/16-18	201003.3
		201004	12	1/2	3/8	32	31	14,5	19	3/4-16	201004.3
		201005	14-15-16	5/8	1/2	37	37,5	19	22	7/8-14	201005.3
		201006	18-20	3/4	3/4	42	40	19	27	11/16-12	201006.3
	290	201007	25	1	1	46	50	24	33	15/16-12	201007.3
	240	201008	30-32	11/4	11/4	53	60	25	41	15/8-12	201008.3
		201009	38	11/2	11/2	59	67	26	48	17/8-12	201009.3
	350	201010	6	1/4	1/4	24	28	14,5	14	7/16-20	201010.3
		201011	8	5/16	1/4	24	28	14,5	14	1/2-20	201011.3
		201012	10	3/8	1/8	27,5	20	10	14	9/16-18	201012.3
		201013	10	3/8	3/8	29,5	31	14,5	19	9/16-18	201013.3
		201014	10	3/8	1/2	31,5	37,5	19	22	9/16-18	201014.3
		201015	12	1/2	1/4	32	31	14,5	19	3/4-16	201015.3
		201016	12	1/2	1/2	32	37,5	19	22	3/4-16	201016.3
		201017	12	1/2	3/4	36	40	19	27	3/4-16	201017.3
		201018	14-15-16	5/8	3/8	37	31	14,5	22	7/8-14	201018.3
		201019	14-15-16	5/8	3/4	39	40	19	27	7/8-14	201019.3
		201020	18-20	3/4	1/2	42	37,5	19	27	11/16-12	201020.3
	290	201021	18-20	3/4	1	45	50	24	33	11/16-12	201021.3
		201022	25	1	3/4	46	40	19	33	15/16-12	201022.3
	240	201023	30-32	11/4	1	53	51	24	41	15/8-12	201023.3

Note: If you wish to order a fitting in stainless steel, please change the first two digit from **20..** to **21..**

MALE STUD ELBOW Thread NPT

Type: **2011..** With O-ring

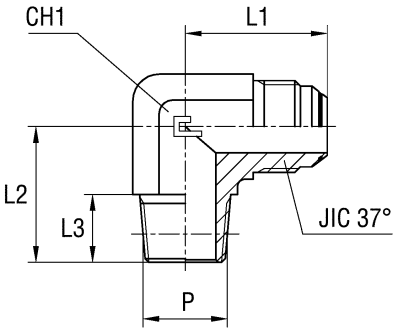

Type: **2011...3** Standard

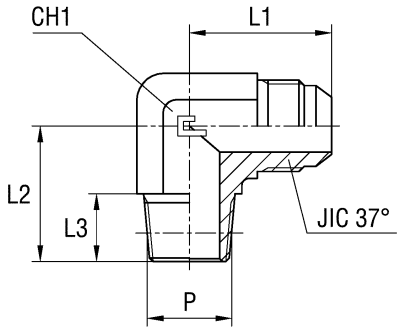

Serie	Bar	Ordering O-ring Body	Ø Tube M	Ø Tube W	P	L1	L2	L3	CH1	JIC 37°	Ordering Standard Body
UNIVERSAL	350	201101	6	1/4	1/8	23	20	10	11	7/16-20	201101.3
		201102	8	5/16	1/8	24	20	10	14	1/2-20	201102.3
		201103	10	3/8	1/4	27,5	28	14,5	14	9/16-18	201103.3
		201104	12	1/2	3/8	32	31	14,5	19	3/4-16	201104.3
		201105	14-15-16	5/8	1/2	37	37,5	19	22	7/8-14	201105.3
		201106	18-20	3/4	3/4	42	40	19	27	11/16-12	201106.3
	290	201107	25	1	1	46	50	24	33	15/16-12	201107.3
	240	201108	30-32	1 1/4	1 1/4	53	60	25	41	1 5/8-12	201108.3
		201109	38	1 1/2	1 1/2	59	67	26	48	1 7/8-12	201109.3
	350	201110	6	1/4	1/4	24	28	14,5	14	7/16-20	201110.3
		201111	6	1/4	3/8	29	31	14,5	19	7/16-20	201111.3
		201112	6	1/4	1/2	31	37,5	19	22	7/16-20	201112.3
		201113	8	5/16	1/4	24	28	14,5	14	1/2-20	201113.3
		201114	10	3/8	1/8	27,5	20	10	14	9/16-18	201114.3
		201115	10	3/8	3/8	29,5	31	14,5	19	9/16-18	201115.3
		201116	10	3/8	1/2	31,5	37,5	19	22	9/16-18	201116.3
		201117	12	1/2	1/4	32	31	14,5	19	3/4-16	201117.3
		201118	12	1/2	1/2	32	37,5	19	22	3/4-16	201118.3
		201119	12	1/2	3/4	36	40	19	27	3/4-16	201119.3
		201120	14-15-16	5/8	3/8	37	31	14,5	22	7/8-14	201120.3
		201121	14-15-16	5/8	3/4	39	40	19	27	7/8-14	201121.3
		201122	18-20	3/4	1/2	42	37,5	19	27	11/16-12	201122.3
	290	201123	18-20	3/4	1	45	50	24	33	11/16-12	201123.3
		201124	25	1	3/4	46	40	19	33	15/16-12	201124.3
	240	201125	25	1	1 1/4	52	60	25	41	15/16-12	201125.3
		201126	30-32	1 1/4	1	53	51	24	41	1 5/8-12	201126.3
		201127	30-32	1 1/4	1 1/2	55	67	26	48	1 5/8-12	201127.3
		201128	38	1 1/2	1 1/4	59	66	25	48	1 7/8-12	201128.3

Note: If you wish to order a fitting in stainless steel, please change the first two digit from **20..** to **21..**

MALE STUD ELBOW 45° Thread BSP Taper - Thread NPT

Type: **2012..** With O-ring
Type: **2013..** With O-ring

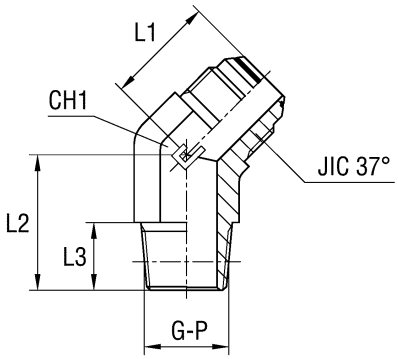

Type: **2012...3** Standard
Type: **2013...3** Standard

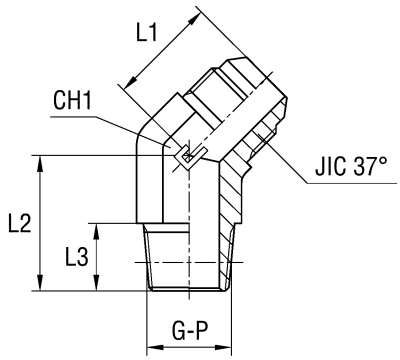

Serie	Bar	Ordering O-ring Body	Ø Tube M	Ø Tube W	G	L1	L2	L3	CH1	JIC 37°	Ordering Standard Body
UNIVERSAL	350	201201	6	1/4	1/8	19,5	16,5	10	11	7/16-20	201201.3
		201202	8	5/16	1/8	20	16,5	10	14	1/2-20	201202.3
		201203	10	3/8	1/4	21,5	22	14,5	14	9/16-18	201203.3
		201204	12	1/2	3/8	25,5	24	14,5	19	3/4-16	201204.3
		201205	14-15-16	5/8	1/2	29	29,5	19	22	7/8-14	201205.3
		201206	18-20	3/4	3/4	33	30,5	19	27	11/16-12	201206.3
	290	201207	25	1	1	38	38	24	33	15/16-12	201207.3
	240	201208	30-32	1 1/4	1 1/4	40	42	25	41	15/8-12	201208.3
		201209	38	1 1/2	1 1/2	46	45	26	48	17/8-12	201209.3
	350	201210	6	1/4	1/4	20	22	14,5	14	7/16-20	201210.3
		201211	8	5/16	1/4	20	22	14,5	14	1/2-20	201211.3
		201212	10	3/8	1/8	21,5	16,5	10	14	9/16-18	201212.3
		201213	10	3/8	3/8	23	24	14,5	19	9/16-18	201213.3
		201214	10	3/8	1/2	23,5	29,5	19	22	9/16-18	201214.3
		201215	12	1/2	1/4	25,5	24	14,5	19	3/4-16	201215.3
		201216	12	1/2	1/2	26	29,5	19	22	3/4-16	201216.3
		201217	12	1/2	3/4	27	30,5	19	27	3/4-16	201217.3
		201218	14-15-16	5/8	3/8	29	25,5	14,5	22	7/8-14	201218.3
		201219	14-15-16	5/8	3/4	30	30,5	19	27	7/8-14	201219.3
		201220	18-20	3/4	1/2	33	30,5	19	27	11/16-12	201220.3
	290	201221	18-20	3/4	1	37	38	24	33	11/16-12	201221.3
		201222	25	1	3/4	38	33	19	33	15/16-12	201222.3
	240	201223	30-32	1 1/4	1	40	41	24	41	15/8-12	201223.3

Note: If you wish to order a fitting in stainless steel, please change the first two digit from **20..** to **21..**
Articles available on scheduled orders only

Serie	Bar	Ordering O-ring Body	Ø Tube M	Ø Tube W	P	L1	L2	L3	CH1	JIC 37°	Ordering Standard Body
UNIVERSAL	350	201301	6	1/4	1/8	19,5	16,5	10	11	7/16-20	201301.3
		201302	8	5/16	1/8	20	16,5	10	14	1/2-20	201302.3
		201303	10	3/8	1/4	21,5	22	14,5	14	9/16-18	201303.3
		201304	12	1/2	3/8	25,5	24	14,5	19	3/4-16	201304.3
		201305	14-15-16	5/8	1/2	29	29,5	19	22	7/8-14	201305.3
		201306	18-20	3/4	3/4	33	30,5	19	27	11/16-12	201306.3
	290	201307	25	1	1	38	38	24	33	15/16-12	201307.3
	240	201308	30-32	1 1/4	1 1/4	40	42	25	41	15/8-12	201308.3
		201309	38	1 1/2	1 1/2	46	45	26	48	17/8-12	201309.3
	350	201310	6	1/4	1/4	20	22	14,5	14	7/16-20	201310.3
		201311	8	5/16	1/4	20	22	14,5	14	1/2-20	201311.3
		201312	10	3/8	1/8	21,5	16,5	10	14	9/16-18	201312.3
		201313	10	3/8	3/8	23	24	14,5	19	9/16-18	201313.3
		201314	10	3/8	1/2	23,5	29,5	19	22	9/16-18	201314.3
		201315	12	1/2	1/4	25,5	24	14,5	19	3/4-16	201315.3
		201316	12	1/2	1/2	26	29,5	19	22	3/4-16	201316.3
		201317	12	1/2	3/4	27	30,5	19	27	3/4-16	201317.3
		201318	14-15-16	5/8	3/8	29	25,5	14,5	22	7/8-14	201318.3
		201319	14-15-16	5/8	3/4	30	30,5	19	27	7/8-14	201319.3
		201320	18-20	3/4	1/2	33	30,5	19	27	11/16-12	201320.3
	290	201321	18-20	3/4	1	37	38	24	33	11/16-12	201321.3
		201322	25	1	3/4	38	33	19	33	15/16-12	201322.3
	240	201323	30-32	1 1/4	1	40	41	24	41	15/8-12	201323.3

Note: If you wish to order a fitting in stainless steel, please change the first two digit from **20..** to **21..**
Articles available on scheduled orders only

MALE STUD BARREL TEE Thread BSP Taper - Thread NPT

Type: **2014..** With O-ring
Type: **2015..** With O-ring

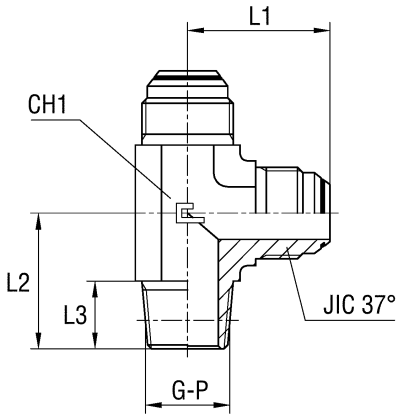

Type: **2014...3** Standard
Type: **2015...3** Standard

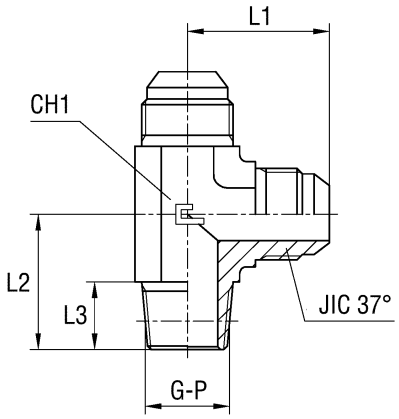

Serie	Bar	Ordering O-ring Body	Ø Tube M	Ø Tube W	G	L1	L2	L3	CH1	JIC 37°	Ordering Standard Body
UNIVERSAL	350	201401	6	1/4	1/8	23	20	10	11	7/16-20	201401.3
		201402	8	5/16	1/8	24	20	10	14	1/2-20	201402.3
		201403	10	3/8	1/4	27,5	28	14,5	14	9/16-18	201403.3
		201404	12	1/2	3/8	32	31	14,5	19	3/4-16	201404.3
		201405	14-15-16	5/8	1/2	37	37,5	19	22	7/8-14	201405.3
		201406	18-20	3/4	3/4	42	40	19	27	11/16-12	201406.3
	290	201407	25	1	1	46	50	24	33	15/16-12	201407.3
	240	201408	30-32	1 1/4	1 1/4	53	60	25	41	1 5/8-12	201408.3
		201409	38	1 1/2	1 1/2	59	67	26	48	1 7/8-12	201409.3
	350	201410	6	1/4	1/4	24	28	14,5	14	7/16-20	201410.3
		201411	8	5/16	1/4	24	28	14,5	14	1/2-20	201411.3
		201412	10	3/8	3/8	29,5	31	14,5	19	9/16-18	201412.3
		201413	12	1/2	1/2	34	37,5	19	22	3/4-16	201413.3
		201414	14-15-16	5/8	3/8	37	31	14,5	22	7/8-14	201414.3
		201415	14-15-16	5/8	3/4	39	40	19	27	7/8-14	201415.3
		201416	18-20	3/4	1/2	42	37,5	19	27	11/16-12	201416.3
	290	201417	25	1	3/4	46	40	19	33	15/16-12	201417.3
	240	201418	30-32	1 1/4	1	53	51	24	41	1 5/8-12	201418.3

Note: If you wish to order a fitting in stainless steel, please change the first two digit from **20..** to **21..**
Articles available on scheduled orders only

Serie	Bar	Ordering O-ring Body	Ø Tube M	Ø Tube W	P	L1	L2	L3	CH1	JIC 37°	Ordering Standard Body
UNIVERSAL	350	201501	6	1/4	1/8	23	20	10	11	7/16-20	201501.3
		201502	8	5/16	1/8	24	20	10	14	1/2-20	201502.3
		201503	10	3/8	1/4	27,5	28	14,5	14	9/16-18	201503.3
		201504	12	1/2	3/8	32	31	14,5	19	3/4-16	201504.3
		201505	14-15-16	5/8	1/2	37	37,5	19	22	7/8-14	201505.3
		201506	18-20	3/4	3/4	42	40	19	27	11/16-12	201506.3
	290	201507	25	1	1	46	50	24	33	15/16-12	201507.3
	240	201508	30-32	1 1/4	1 1/4	53	60	25	41	1 5/8-12	201508.3
		201509	38	1 1/2	1 1/2	59	67	26	48	1 7/8-12	201509.3
	350	201510	6	1/4	1/4	24	28	14,5	14	7/16-20	201510.3
		201511	8	5/16	1/4	24	28	14,5	14	1/2-20	201511.3
		201512	10	3/8	3/8	29,5	31	14,5	19	9/16-18	201512.3
		201513	12	1/2	1/2	34	37,5	19	22	3/4-16	201513.3
		201514	14-15-16	5/8	3/8	37	31	14,5	22	7/8-14	201514.3
		201515	14-15-16	5/8	3/4	39	40	19	27	7/8-14	201515.3
		201516	18-20	3/4	1/2	42	37,5	19	27	11/16-12	201516.3
	290	201517	25	1	3/4	46	40	19	33	15/16-12	201517.3
	240	201518	30-32	1 1/4	1	53	51	24	41	1 5/8-12	201518.3

Note: If you wish to order a fitting in stainless steel, please change the first two digit from **20..** to **21..**
Articles available on scheduled orders only

MALE STUD BRANCH TEE Thread NPT - Thread BSP Taper

Type: **2016..** With O-ring
Type: **2017..** With O-ring

Type: **2016...3** Standard
Type: **2017...3** Standard

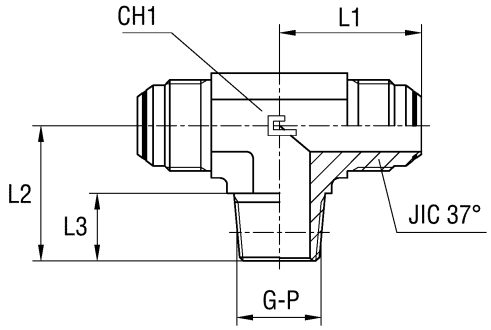

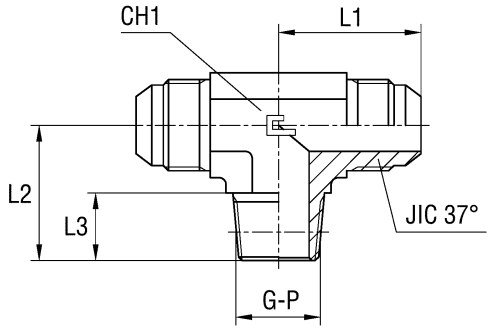

Serie	Bar	Ordering O-ring Body	Ø Tube M	Ø Tube W	G	L1	L2	L3	CH1	JIC 37°	Ordering Standard Body
UNIVERSAL	350	201601	6	1/4	1/8	23	20	10	11	7/16-20	201601.3
		201602	8	5/16	1/8	24	20	10	14	1/2-20	201602.3
		201603	10	3/8	1/4	27,5	28	14,5	14	9/16-18	201603.3
		201604	12	1/2	3/8	32	31	14,5	19	3/4-16	201604.3
		201605	14-15-16	5/8	1/2	37	37,5	19	22	7/8-14	201605.3
		201606	18-20	3/4	3/4	42	40	19	27	11/16-12	201606.3
	290	201607	25	1	1	46	50	24	33	15/16-12	201607.3
	240	201608	30-32	1 1/4	1 1/4	53	60	25	41	1 5/8-12	201608.3
		201609	38	1 1/2	1 1/2	59	67	26	48	1 7/8-12	201609.3
	350	201610	6	1/4	1/4	24	28	14,5	14	7/16-20	201610.3
		201611	8	5/16	1/4	24	28	14,5	14	1/2-20	201611.3
		201612	10	3/8	3/8	29,5	31	14,5	19	9/16-18	201612.3
		201613	12	1/2	1/2	34	37,5	19	22	3/4-16	201613.3
		201614	14-15-16	5/8	3/8	37	31	14,5	22	7/8-14	201614.3
		201615	14-15-16	5/8	3/4	39	40	19	27	7/8-14	201615.3
		201616	18-20	3/4	1/2	42	37,5	19	27	11/16-12	201616.3
	290	201617	25	1	3/4	46	40	19	33	15/16-12	201617.3
	240	201618	30-32	1 1/4	1	53	51	24	41	1 5/8-12	201618.3

Note: If you wish to order a fitting in stainless steel, please change the first two digit from **20..** to **21..**
Articles available on scheduled orders only .

Serie	Bar	Ordering O-ring Body	Ø Tube M	Ø Tube W	P	L1	L2	L3	CH1	JIC 37°	Ordering Standard Body
UNIVERSAL	350	201701	6	1/4	1/8	23	20	10	11	7/16-20	201701.3
		201702	8	5/16	1/8	24	20	10	14	1/2-20	201702.3
		201703	10	3/8	1/4	27,5	28	14,5	14	9/16-18	201703.3
		201704	12	1/2	3/8	32	31	14,5	19	3/4-16	201704.3
		201705	14-15-16	5/8	1/2	37	37,5	19	22	7/8-14	201705.3
		201706	18-20	3/4	3/4	42	40	19	27	11/16-12	201706.3
	290	201707	25	1	1	46	50	24	33	15/16-12	201707.3
	240	201708	30-32	1 1/4	1 1/4	53	60	25	41	1 5/8-12	201708.3
		201709	38	1 1/2	1 1/2	59	67	26	48	1 7/8-12	201709.3
	350	201710	6	1/4	1/4	24	28	14,5	14	7/16-20	201710.3
		201711	8	5/16	1/4	24	28	14,5	14	1/2-20	201711.3
		201712	10	3/8	3/8	29,5	31	14,5	19	9/16-18	201712.3
		201713	12	1/2	1/2	34	37,5	19	22	3/4-16	201713.3
		201714	14-15-16	5/8	3/8	37	31	14,5	22	7/8-14	201714.3
		201715	14-15-16	5/8	3/4	39	40	19	27	7/8-12	201715.3
		201716	18-20	3/4	1/2	42	37,5	19	27	11/16-12	201716.3
	290	201717	25	1	3/4	46	40	19	33	15/16-12	201717.3
	240	201718	30-32	1 1/4	1	53	51	24	41	1 5/8-12	201718.3

Note: If you wish to order a fitting in stainless steel, please change the first two digit from **20..** to **21..**
Articles available on scheduled orders only

FEMALE BULKHEAD CONNECTION Thread BSP Parallel

Type: **2018..** With O-ring

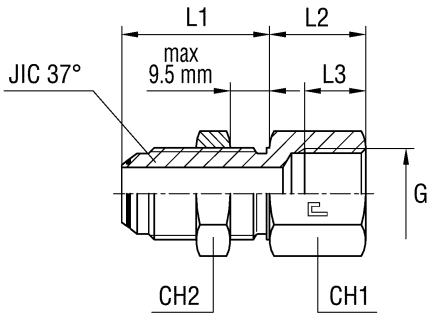

Type: **2018...3** Standard

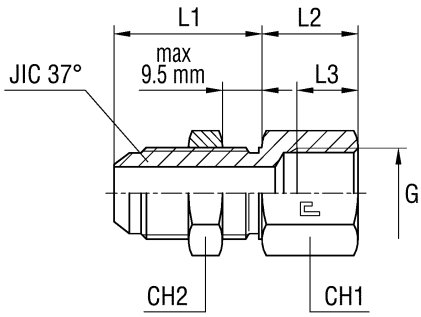

Serie	Bar	Ordering O-ring Body	Ø Tube M	Ø Tube W	G	L1	L2	L3	CH1	CH2	JIC 37°	Ordering Standard Body
UNIVERSAL	350	201801	6	1/4	1/8	31,5	16	10	17	17	7/16-20	201801.3
		201802	8	5/16	1/8	31,5	16	10	19	19	1/2-20	201802.3
		201803	10	3/8	1/4	33,5	21	14	22	22	9/16-18	201803.3
		201804	12	1/2	3/8	37,6	22,4	14	24	24	3/4-16	201804.3
		201805	14-15-16	5/8	1/2	41,1	26,4	17	30	30	7/8-14	201805.3
		201806	18-20	3/4	3/4	45,4	29,1	19	36	36	11/16-12	201806.3
	290	201807	25	1	1	45,4	31,1	21,5	41	41	15/16-12	201807.3
	240	201808	30-32	1 1/4	1 1/4	46,7	36,3	23,5	50	50	1 5/8-12	201808.3
		201809	38	1 1/2	1 1/2	47	38	25,5	60	55	1 7/8-12	201809.3
	350	201810	6	1/4	1/4	31,5	21	14	19	17	7/16-20	201810.3
		201811	8	5/16	1/4	31,5	21	14	19	19	1/2-20	201811.3
		201812	10	3/8	1/8	33,5	16	10	17	22	9/16-18	201812.3
		201813	10	3/8	3/8	33,5	22,5	14	24	22	9/16-18	201813.3
		201814	12	1/2	1/4	37,6	21,4	14	22	24	3/4-16	201814.3
		201815	12	1/2	1/2	37,6	26,4	17	30	24	3/4-16	201815.3
		201816	18-20	3/4	1/2	45,4	26,6	17	30	36	11/16-12	201816.3

Note: If you wish to order a fitting in stainless steel, please change the first two digit from **20..** to **21..**
Articles available on scheduled orders only

FEMALE BULKHEAD CONNECTION Thread NPT

Type: **2019..** With O-ring

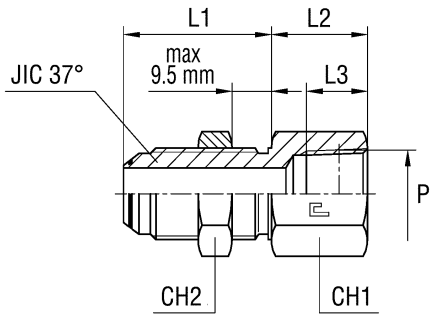

Type: **2019...3** Standard

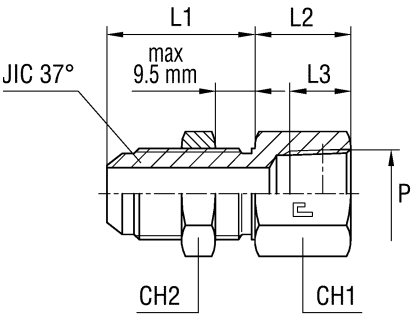

Serie	Bar	Ordering O-ring Body	Ø Tube M	Ø Tube W	G	L1	L2	L3	CH1	CH2	JIC 37°	Ordering Standard Body
UNIVERSAL	350	201901	6	1/4	1/8	31,5	16	9,5	17	17	7/16-20	201901.3
		201902	8	5/16	1/8	31,5	16	9,5	19	19	1/2-20	201902.3
		201903	10	3/8	1/4	33,5	21	14	22	22	9/16-18	201903.3
		201904	12	1/2	3/8	37,6	22,4	14,5	24	24	3/4-16	201904.3
		201905	14-15-16	5/8	1/2	41,1	26,4	19	30	30	7/8-14	201905.3
		201906	18-20	3/4	3/4	45,4	29,1	19,5	36	36	11/16-12	201906.3
	290	201907	25	1	1	45,4	31,1	23,5	41	41	15/16-12	201907.3
	240	201908	30-32	1 1/4	1 1/4	46,7	36,3	24	50	50	1 5/8-12	201908.3
		201909	38	1 1/2	1 1/2	47	38	24	60	55	1 7/8-12	201909.3
	350	201910	6	1/4	1/4	31,5	21	14	19	17	7/16-20	201910.3
		201911	8	5/16	1/4	31,5	21	14	19	19	1/2-20	201911.3
		201912	10	3/8	1/8	33,5	16	9,5	17	22	9/16-18	201912.3
		201913	10	3/8	3/8	33,5	22,5	14,5	24	22	9/16-18	201913.3
		201914	12	1/2	1/4	37,6	21,4	14	22	24	3/4-16	201914.3
		201915	12	1/2	1/2	37,6	26,4	19	30	24	3/4-16	201915.3
		201916	18-20	3/4	1/2	45,4	26,6	19	30	36	11/16-12	201916.3

Note: If you wish to order a fitting in stainless steel, please change the first two digit from **20..** to **21..**
Articles available on scheduled orders only

BULKHEAD CONNECTION

Type: **2020..** With O-ring

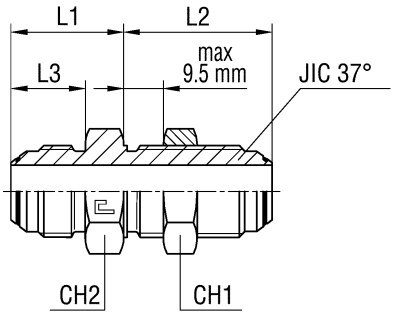

Type: **2020...3** Standard

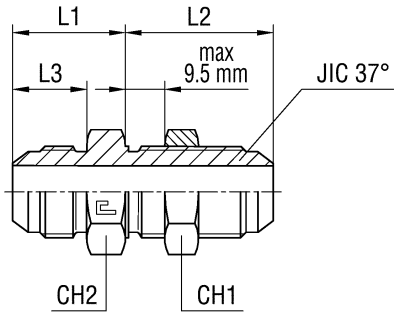

Serie	Bar	Ordering O-ring Body	Ø Tube M	Ø Tube W	L1	L2	L3	CH1	CH2	JIC 37°	Ordering Standard Body
UNIVERSAL	450	202001	6	1/4	21	31,5	14	17	17	7/16-20	202001.3
		202002	8	5/16	21	31,5	14	19	19	1/2-20	202002.3
	350	202003	10	3/8	22	33,5	14,1	22	22	9/16-18	202003.3
		202004	12	1/2	24,4	36,6	16,7	24	24	3/4-16	202004.3
		202005	14-15-16	5/8	28,4	41,1	19,3	30	30	7/8-14	202005.3
		202006	18-20	3/4	33,1	45,4	21,9	36	36	11/16-12	202006.3
	290	202007	25	1	34,6	45,4	23,1	41	41	15/16-12	202007.3
	240	202008	30-32	1 1/4	37,3	46,7	24,3	50	50	15/8-12	202008.3
		202009	38	1 1/2	42,5	47	27,5	55	55	17/8-12	202009.3

Note: If you wish to order a fitting in stainless steel, please change the first two digit from **20..** to **21..**

BULKHEAD ELBOW

Type: **2021..** With O-ring

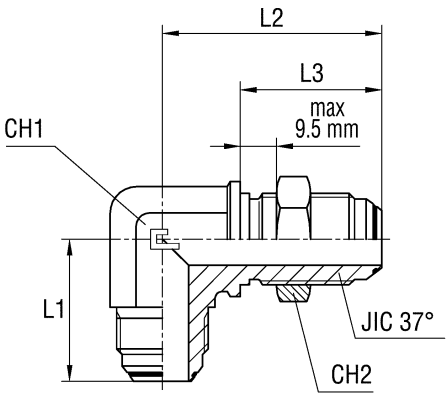

Type: **2021...3** Standard

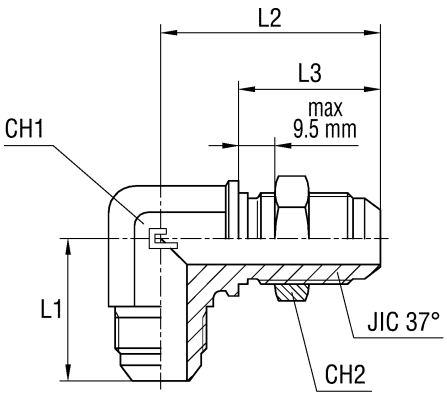

Serie	Bar	Ordering O-ring Body	Ø Tube M	Ø Tube W	L1	L2	L3	CH1	CH2	JIC 37°	Ordering Standard Body
UNIVERSAL	450	202101	6	1/4	24,5	40,5	28,3	11	17	7/16-20	202101.3
		202102	8	5/16	27	43,5	28,3	14	19	1/2-20	202102.3
	350	202103	10	3/8	27,5	46	30,1	14	22	9/16-18	202103.3
		202104	12	1/2	34,5	53,5	35	19	24	3/4-16	202104.3
		202105	14-15-16	5/8	39,5	60,5	38,5	22	30	7/8-14	202105.3
		202106	18-20	3/4	45	68	42,8	27	36	11/16-12	202106.3
	290	202107	25	1	49,5	71	42,8	33	41	15/16-12	202107.3
	240	202108	30-32	1 1/4	55	79	44,1	41	50	15/18-12	202108.3
		202109	38	1 1/2	59,5	87	44,3	48	55	17/8-12	202109.3

Note: If you wish to order a fitting in stainless steel, please change the first two digit from **20..** to **21..**
Articles available on scheduled orders only

45° BULKHEAD ELBOW

Type: **2022..** With O-ring

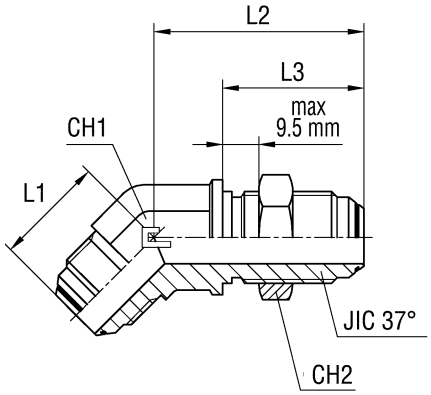

Type: **2022...3** Standard

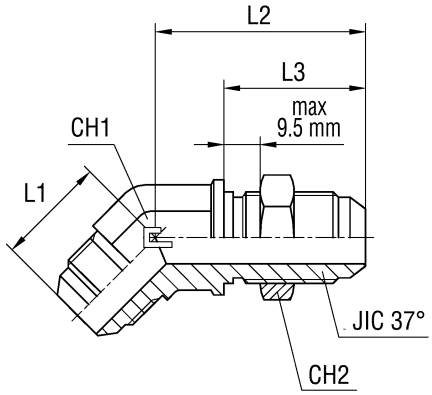

Serie	Bar	Ordering O-ring Body	Ø Tube M	Ø Tube W	L1	L2	L3	CH1	CH2	JIC 37°	Ordering Standard Body
UNIVERSAL	450	202201	6	1/4	19,5	39	28,3	11	17	7/16-20	202201.3
		202202	8	5/16	20	41	28,3	14	19	1/2-20	202202.3
	350	202203	10	3/8	21,5	43	30,1	14	22	9/16-18	202203.3
		202204	12	1/2	25,5	49,5	35	19	24	3/4-16	202204.3
		202205	14-15-16	5/8	29	55	38,5	22	30	7/8-14	202205.3
		202206	18-20	3/4	33	62	42,8	27	36	11/16-12	202206.3
	290	202207	25	1	38	65	42,8	33	41	15/16-12	202207.3
	240	202208	30-32	1 1/4	40	67	44,1	41	50	15/8-12	202208.3
		202209	38	1 1/2	46	68	44,3	48	55	17/8-12	202209.3

Note: If you wish to order a fitting in stainless steel, please change the first two digit from **20..** to **21..**
Articles available on request only

BULKHEAD BRANCH TEE

Type: **2023..** With O-ring

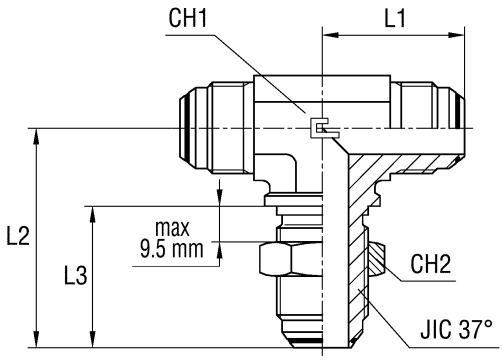

Type: **2023...3** Standard

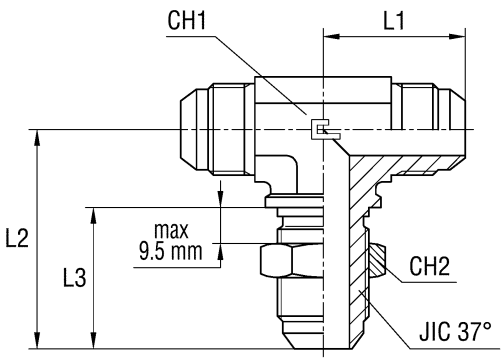

Serie	Bar	Ordering O-ring Body	Ø Tube M	Ø Tube W	L1	L2	L3	CH1	CH2	JIC 37°	Ordering Standard Body
UNIVERSAL	450	202301	6	1/4	24,5	40,5	28,3	11	17	7/16-20	202301.3
		202302	8	5/16	27	43,5	28,3	14	19	1/2-20	202302.3
	350	202303	10	3/8	27,5	46	30,1	14	22	9/16-18	202303.3
		202304	12	1/2	34,5	53,5	35	19	24	3/4-16	202304.3
		202305	14-15-16	5/8	39,5	60,5	38,5	22	30	7/8-14	202305.3
		202306	18-20	3/4	45	68	42,8	27	36	11/16-12	202306.3
	290	202307	25	1	49,5	71	42,8	33	41	15/16-12	202307.3
	240	202308	30-32	1 1/4	55	79	44,1	41	50	15/18-12	202308.3
		202309	38	1 1/2	59,5	87	44,3	48	55	17/8-12	202309.3

Note: If you wish to order a fitting in stainless steel, please change the first two digit from **20..** to **21..**
Articles available on request only

STRAIGHT COUPLING

Type: **2024..** With O-ring

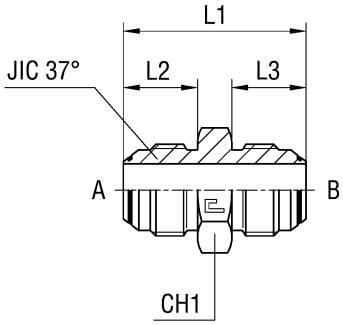

Type: **2024...3** Standard

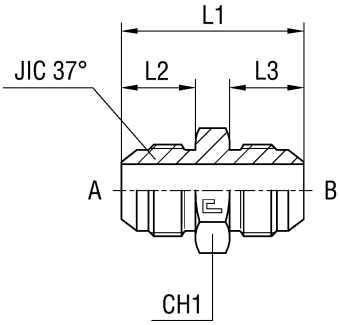

Serie	Bar	Ordering O-ring Body	Ø Tube A^M	Ø Tube B^M	Ø Tube A^W	Ø Tube B^W	L1	L2	L3	CH1	JIC 37° A	JIC 37° B	Ordering Standard Body
UNIVERSAL	450	202401	6	6	1/4	1/4	35	14	14	12	7/16-20	7/16-20	202401.3
		202402	8	8	5/16	5/16	35	14	14	14	1/2-20	1/2-20	202402.3
	350	202403	10	10	3/8	3/8	36	14,1	14,1	17	9/16-18	9/16-18	202403.3
		202404	12	12	1/2	1/2	41	16,7	16,7	22	3/4-16	3/4-16	202404.3
		202405	14-15-16	14-15-16	5/8	5/8	48	19,3	19,3	24	7/8-14	7/8-14	202405.3
		202406	18-20	18-20	3/4	3/4	55	21,9	21,9	30	11/16-12	11/16-12	202406.3
	290	202407	25	25	1	1	57	23,1	23,1	36	15/16-12	15/16-12	202407.3
	240	202408	30-32	30-32	1 1/4	1 1/4	61,5	24,3	24,3	46	1 5/8-12	1 5/8-12	202408.3
		202409	38	38	1 1/2	1 1/2	70	27,5	27,5	50	1 7/8-12	1 7/8-12	202409.3
	350	202410	10	6	3/8	1/4	36	14,1	14	17	9/16-18	7/16-20	202410.3
		202411	12	10	1/2	3/8	38,5	16,7	14,1	22	3/4-16	9/16-18	202411.3
		202412	14-15-16	12	5/8	1/2	45,5	19,3	16,7	24	7/8-14	3/4-16	202412.3
		202413	18-20	12	3/4	1/2	50	21,9	16,7	30	11/16-12	3/4-16	202413.3
		202414	18-20	14-15-16	3/4	5/8	52,5	21,9	19,3	30	11/16-12	7/8-14	202414.3
	290	202415	25	18-20	1	3/4	56	23,1	21,9	36	15/16-12	11/16-12	202415.3

Note: If you wish to order a fitting in stainless steel, please change the first two digit from **20..** to **21..**

EQUAL ELBOW

Type: **2025..** With O-ring

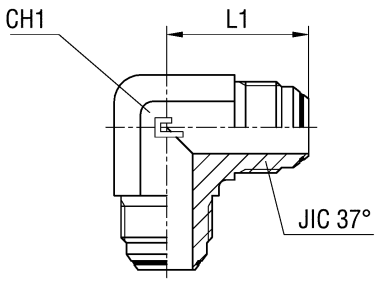

Type: **2025...3** Standard

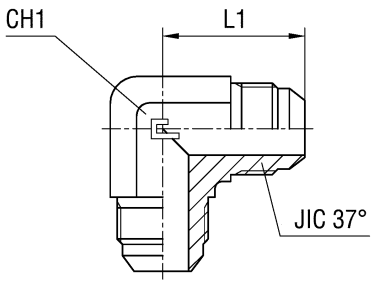

Serie	Bar	Ordering O-ring Body	Ø Tube M	Ø Tube W	L1	CH1	JIC 37°	Ordering Standard Body
UNIVERSAL	450	202501	6	1/4	23	11	7/16-20	202501.3
		202502	8	5/16	24	14	1/2-20	202502.3
	350	202503	10	3/8	27,5	14	9/16-18	202503.3
		202504	12	1/2	32	19	3/4-16	202504.3
		202505	14-15-16	5/8	37	22	7/8-14	202505.3
		202506	18-20	3/4	42	27	11/16-12	202506.3
	290	202507	25	1	46	33	15/16-12	202507.3
	240	202508	30-32	1 1/4	53	41	1 5/8-12	202508.3
		202509	38	1 1/2	59	48	1 7/8-12	202509.3

Note: If you wish to order a fitting in stainless steel, please change the first two digit from **20..** to **21..**

EQUAL TEE

Type: **2026..** With O-ring

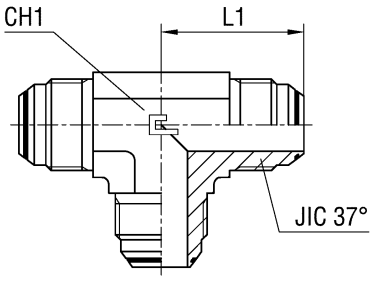

Type: **2026...3** Standard

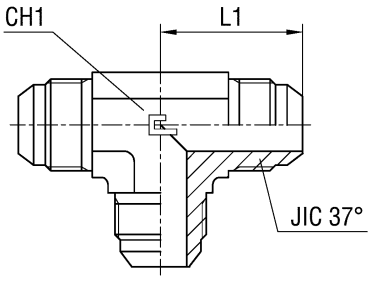

Serie	Bar	Ordering O-ring Body	Ø Tube M	Ø Tube W	L1	CH1	JIC 37°	Ordering Standard Body
UNIVERSAL	450	202601	6	1/4	23	11	7/16-20	202601.3
		202602	8	5/16	24	14	1/2-20	202602.3
	350	202603	10	3/8	27,5	14	9/16-18	202603.3
		202604	12	1/2	32	19	3/4-16	202604.3
		202605	14-15-16	5/8	37	22	7/8-14	202605.3
		202606	18-20	3/4	42	27	11/16-12	202606.3
	290	202607	25	1	46	33	15/16-12	202607.3
	240	202608	30-32	11/4	53	41	15/8-12	202608.3
		202609	38	11/2	59	48	17/8-12	202609.3

Note: If you wish to order a fitting in stainless steel, please change the first two digit from **20..** to **21..**

EQUAL CROSS

Type: **2027..** With O-ring

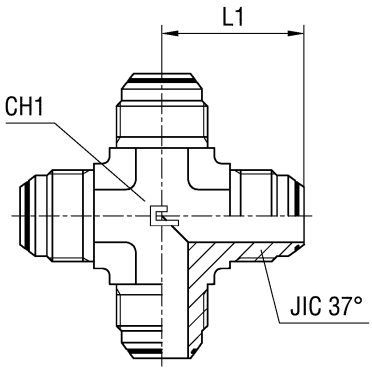

Type: **2027...3** Standard

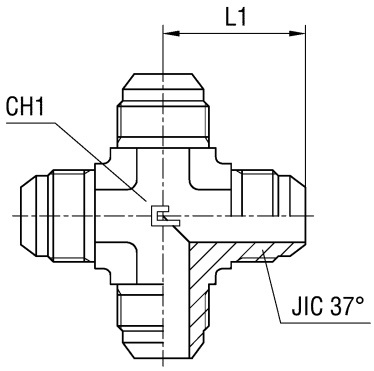

Serie	Bar	Ordering O-ring Body	Ø Tube M	Ø Tube W	L1	CH1	JIC 37°	Ordering Standard Body
UNIVERSAL	450	202701	6	1/4	23	11	7/16-20	202701.3
		202702	8	5/16	24	14	1/2-20	202702.3
	350	202703	10	3/8	27,5	14	9/16-18	202703.3
		202704	12	1/2	32	19	3/4-16	202704.3
		202705	14-15-16	5/8	37	22	7/8-14	202705.3
		202706	18-20	3/4	42	27	11/16-12	202706.3
	290	202707	25	1	46	33	15/16-12	202707.3
	240	202708	30-32	11/4	53	41	15/8-12	202708.3
		202709	38	11/2	59	48	17/8-12	202709.3

Note: If you wish to order a fitting in stainless steel, please change the first two digit from **20..** to **21..**

FEMALE STUD ELBOW Thread BSP Parallel

Type: **2028..** With O-ring

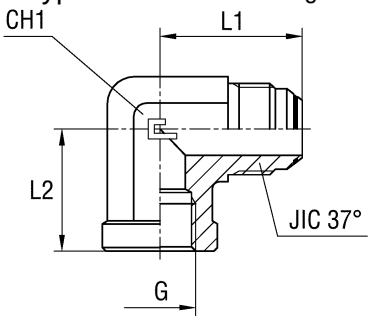

Type: **2028...3** Standard

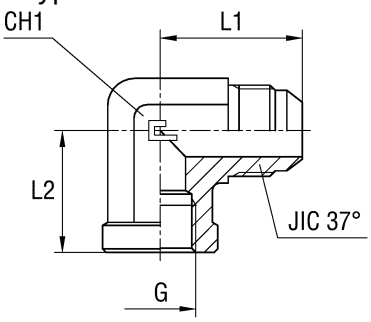

Serie	Bar	Ordering O-ring Body	Ø Tube M	Ø Tube W	G	L1	L2	CH1	JIC 37°	Ordering Standard Body
UNIVERSAL	350	202801	6	1/4	1/8	27,5	17	14	7/16-20	202801.3
		202802	8	5/16	1/8	27,5	17	14	1/2-20	202802.3
		202803	10	3/8	1/4	31	22,5	19	9/16-18	202803.3
		202804	12	1/2	3/8	36	26	22	3/4-16	202804.3
		202805	14-15-16	5/8	1/2	42	31	27	7/8-14	202805.3
		202806	18-20	3/4	3/4	48	34,5	33	1 1/16-12	202806.3
	290	202807	25	1	1	55	41	41	1 5/16-12	202807.3
	240	202808	30-32	1 1/4	1 1/4	59	43	48	1 5/8-12	202808.3
		202809	38	1 1/2	1 1/2	73	53	65	1 7/8-12	202809.3
	350	202810	6	1/4	1/4	29	22,5	19	7/16-20	202810.3
		202811	8	5/16	1/4	29	22,5	19	1/2-20	202811.3
		202812	10	3/8	1/8	27,5	17	14	9/16-18	202812.3
		202813	10	3/8	03/8	31,5	26	22	9/16-18	202813.3
		202814	12	1/2	1/4	32	22,5	19	3/4-16	202814.3
		202815	12	1/2	1/2	36	31	27	3/4-16	202815.3
		202816	18-20	3/4	1/2	42	31	27	1 1/16-12	202816.3
	240	202817	30-32	1 1/4	1	55	41	41	1 5/8-12	202817.3
		202818	38	1 1/2	1 1/4	59	43	48	1 7/8-12	202818.3

Note: If you wish to order a fitting in stainless steel, please change the first two digit from **20..** to **21..**
Articles available on request only

FEMALE STUD ELBOW Thread NPT

Type: **2029..** With O-ring

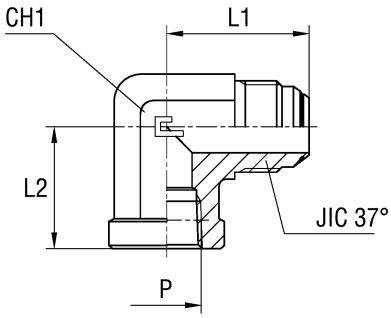

Type: **2029...3** Standard

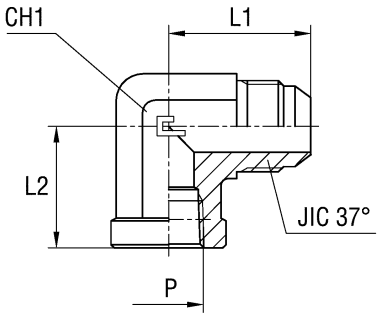

Serie	Bar	Ordering O-ring Body	Ø Tube M	Ø Tube W	P	L1	L2	CH1	JIC 37°	Ordering Standard Body
UNIVERSAL	350	202901	6	1/4	1/8	27,5	17	14	7/16-20	202901.3
		202902	8	5/16	1/8	27,5	17	14	1/2-20	202902.3
		202903	10	3/8	1/4	31	22,5	19	9/16-18	202903.3
		202904	12	1/2	3/8	36	26	22	3/4-16	202904.3
		202905	14-15-16	5/8	1/2	42	31	27	7/8-14	202905.3
		202906	18-20	3/4	3/4	48	34,5	33	1 1/16-12	202906.3
	290	202907	25	1	1	55	41	41	1 5/16-12	202907.3
	240	202908	30-32	1 1/4	1 1/4	59	43	48	1 5/8-12	202908.3
		202909	38	1 1/2	1 1/2	73	53	65	1 7/8-12	202909.3
	350	202910	6	1/4	1/4	29	22,5	19	7/16-20	202910.3
		202911	8	5/16	1/4	29	22,5	19	1/2-20	202911.3
		202912	10	3/8	1/8	27,5	17	14	9/16-18	202912.3
		202913	10	3/8	3/8	31,5	26	22	9/16-18	202913.3
		202914	12	1/2	1/4	32	22,5	19	3/4-16	202914.3
		202915	12	1/2	1/2	36	31	27	3/4-16	202915.3
		202916	18-20	3/4	1/2	42	31	27	1 1/16-12	202916.3

Note: If you wish to order a fitting in stainless steel, please change the first two digit from **20..** to **21..**
Articles available on request only

FEMALE STUD BARREL TEE Thread BSP Parallel

Type: **2030..** With O-ring

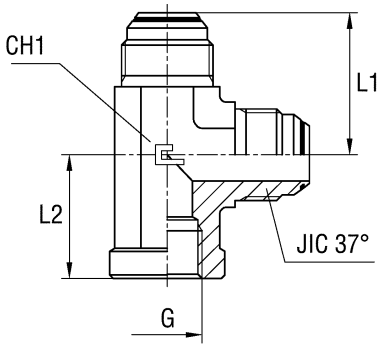

Type: **2030...3** Standard

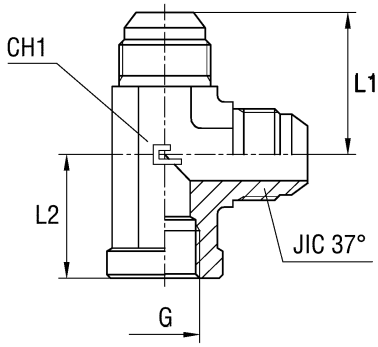

Serie	Bar	Ordering O-ring Body	Ø Tube M	Ø Tube W	G	L1	L2	CH1	JIC 37°	Ordering Standard Body
UNIVERSAL	350	203001	6	1/4	1/8	27,5	17	14	7/16-20	203001.3
		203002	8	5/16	1/8	27,5	17	14	1/2-20	203002.3
		203003	10	3/8	1/4	31	22,5	19	9/16-18	203003.3
		203004	12	1/2	3/8	36	26	22	3/4-16	203004.3
		203005	14-15-16	5/8	1/2	42	31	27	7/8-14	203005.3
		203006	18-20	3/4	3/4	48	34,5	33	11/16-12	203006.3
	290	203007	25	1	1	55	41	41	15/16-12	203007.3
	240	203008	30-32	11/4	11/4	59	43	48	15/8-12	203008.3
		203009	38	11/2	11/2	73	53	65	17/8-12	203009.3
	350	203010	6	1/4	1/4	29	22,5	19	7/16-20	203010.3
		203011	8	5/16	1/4	29	22,5	19	1/2-20	203011.3
		203012	10	3/8	1/8	27,5	17	14	9/16-18	203012.3
		203013	10	3/8	3/8	31,5	26	22	9/16-18	203013.3
		203014	12	1/2	1/4	32	22,5	19	3/4-16	203014.3
		203015	12	1/2	1/2	36	31	27	3/4-16	203015.3
		203016	18-20	3/4	1/2	42	31	27	11/16-12	203016.3
	240	203017	30-32	11/4	1	55	41	41	15/8-12	203017.3
		203018	38	11/2	11/4	59	43	48	17/8-12	203018.3

Note: If you wish to order a fitting in stainless steel, please change the first two digit from **20..** to **21..**
Articles available on request only

FEMALE STUD BARREL TEE Thread NPT

Type: **2031..** With O-ring

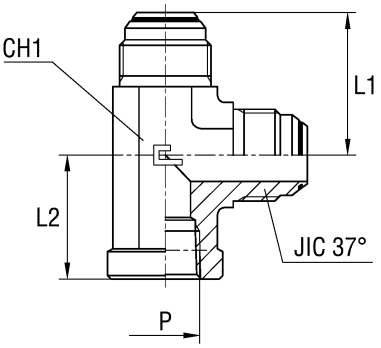

Type: **2031...3** Standard

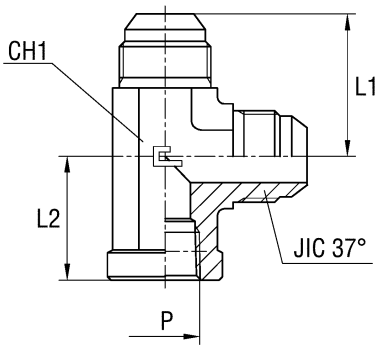

Serie	Bar	Ordering O-ring Body	Ø Tube M	Ø Tube W	P	L1	L2	CH1	JIC 37°	Ordering Standard Body
UNIVERSAL	350	203101	6	1/4	1/8	27,5	17	14	7/16-20	203101.3
		203102	8	5/16	1/8	27,5	17	14	1/2-20	203102.3
		203103	10	3/8	1/4	31	22,5	19	9/16-18	203103.3
		203104	12	1/2	3/8	36	26	22	3/4-16	203104.3
		203105	14-15-16	5/8	1/2	42	31	27	7/8-14	203105.3
		203106	18-20	3/4	3/4	48	34,5	33	11/16-12	203106.3
	290	203107	25	1	1	55	41	41	15/16-12	203107.3
	240	203108	30-32	11/4	11/4	59	43	48	15/8-12	203108.3
		203109	38	11/2	11/2	73	53	65	17/8-12	203109.3
	350	203110	6	1/4	1/4	29	22,5	19	7/16-20	203110.3
		203111	8	5/16	1/4	29	22,5	19	1/2-20	203111.3
		203112	10	3/8	1/8	27,5	17	14	9/16-18	203112.3
		203113	10	3/8	3/8	31,5	26	22	9/16-18	203113.3
		203114	12	1/2	1/4	32	22,5	19	3/4-16	203114.3
		203115	12	1/2	1/2	36	31	27	3/4-16	203115.3
		203116	18-20	3/4	1/2	42	31	27	11/16-12	203116.3

Note: If you wish to order a fitting in stainless steel, please change the first two digit from **20..** to **21..**
Articles available on request only.

FEMALE STUD BRANCH TEE Thread BSP Parallel

Type: **2032..** With O-ring

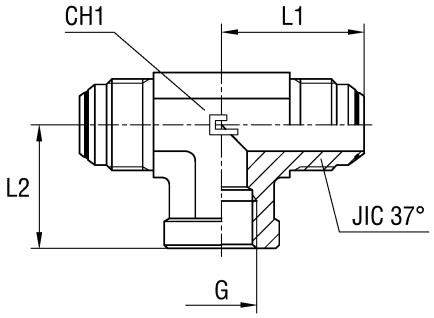

Type: **2032...3** Standard

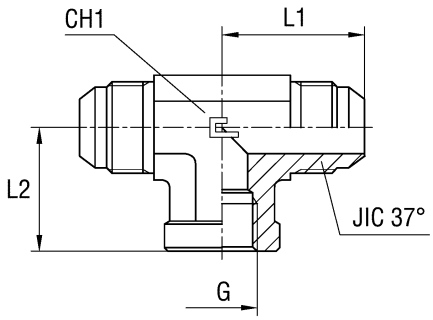

Serie	Bar	Ordering O-ring Body	Ø Tube M	Ø Tube W	G	L1	L2	CH1	JIC 37°	Ordering Standard Body
UNIVERSAL	350	203201	6	1/4	1/8	27,5	17	14	7/16-20	203201.3
		203202	8	5/16	1/8	27,5	17	14	1/2-20	203202.3
		203203	10	3/8	1/4	31	22,5	19	9/16-18	203203.3
		203204	12	1/2	3/8	36	26	22	3/4-16	203204.3
		203205	14-15-16	5/8	1/2	42	31	27	7/8-14	203205.3
		203206	18-20	3/4	3/4	48	34,5	33	11/16-12	203206.3
	290	203207	25	1	1	55	41	41	15/16-12	203207.3
	240	203208	30-32	11/4	11/4	59	43	48	15/8-12	203208.3
		203209	38	11/2	11/2	73	53	65	17/8-12	203209.3
	350	203210	6	1/4	1/4	29	22,5	19	7/16-20	203210.3
		203211	8	5/16	1/4	29	22,5	19	1/2-20	203211.3
		203212	10	3/8	1/8	27,5	17	14	9/16-18	203212.3
		203213	10	3/8	3/8	31,5	26	22	9/16-18	203213.3
		203214	12	1/2	1/4	32	22,5	19	3/4-16	203214.3
		203215	12	1/2	1/2	36	31	27	3/4-16	203215.3
		203216	18-20	3/4	1/2	42	31	27	11/16-12	203216.3
	240	203217	30-32	11/4	1	55	41	41	15/8-12	203217.3
		203218	38	11/2	11/4	59	43	48	17/8-12	203218.3

Note: If you wish to order a fitting in stainless steel, please change the first two digit from **20..** to **21..**
Articles available on request only

FEMALE STUD BRANCH TEE Thread NPT

Type: **2033..** With O-ring

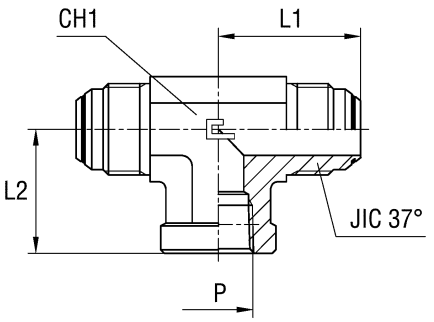

Type: **2033...3** Standard

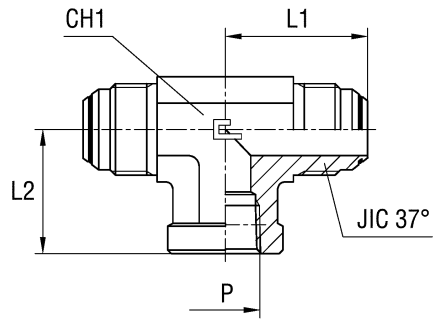

Serie	Bar	Ordering O-ring Body	Ø Tube M	Ø Tube W	P	L1	L2	CH1	JIC 37°	Ordering Standard Body
UNIVERSAL	350	203301	6	1/4	1/8	27,5	17	14	7/16-20	203301.3
		203302	8	5/16	1/8	27,5	17	14	1/2-20	203302.3
		203303	10	3/8	1/4	31	22,5	19	9/16-18	203303.3
		203304	12	1/2	3/8	36	26	22	3/4-16	203304.3
		203305	14-15-16	5/8	1/2	42	31	27	7/8-14	203305.3
		203306	18-20	3/4	3/4	48	34,5	33	11/16-12	203306.3
	290	203307	25	1	1	55	41	41	15/16-12	203307.3
	240	203308	30-32	11/4	11/4	59	43	48	15/8-12	203308.3
		203309	38	11/2	11/2	73	53	65	17/8-12	203309.3
	350	203310	6	1/4	1/4	29	22,5	19	7/16-20	203310.3
		203311	8	5/16	1/4	29	22,5	19	1/2-20	203311.3
		203312	10	3/8	1/8	27,5	17	14	9/16-18	203312.3
		203313	10	3/8	3/8	31,5	26	22	9/16-18	203313.3
		203314	12	1/2	1/4	32	22,5	19	3/4-16	203314.3
		203315	12	1/2	1/2	36	31	27	3/4-16	203315.3
		203316	18-20	3/4	1/2	42	31	27	11/16-12	203316.3

Note: If you wish to order a fitting in stainless steel, please change the first two digit from **20..** to **21..**
Articles available on request only

STRAIGHT INTERMEDIATE REDUCTION

Type: **2034..** With O-ring

Type: **2034...3** Standard

FORM X

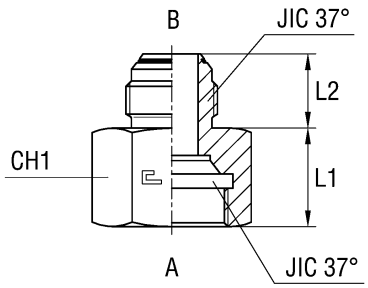

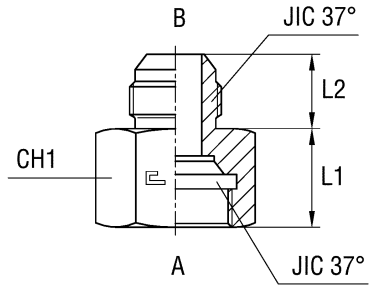

FORM Y

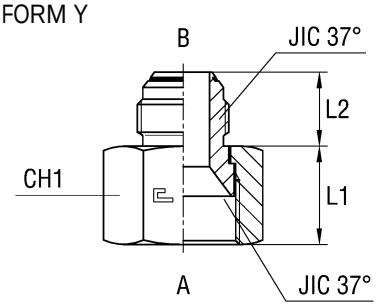

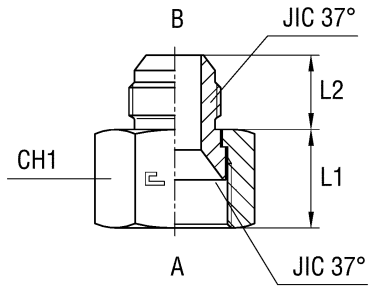

Serie	Bar	Ordering O-ring Body	Ø Tube A^M	Ø Tube B^M	Ø Tube A^W	Ø Tube B^W	FORM	L1	L2	CH1	JIC 37° A	JIC 37° B	Ordering Standard Body
UNIVERSAL	450	203401	8	6	5/16	1/4	X	17,5	14	17	1/2-20	7/16-20	203401.3
	350	203402	10	6	3/8	1/4	Y	19	14	19	9/16-18	7/16-20	203402.3
		203403	12	6	1/2	1/4	Y	21,9	14	22	3/4-16	7/16-20	203403.3
		203404	14-15-16	6	5/8	1/4	Y	25,2	14	27	7/8-14	7/16-20	203404.3
		203405	18-20	6	3/4	1/4	Y	26,4	14	32	1 1/16-12	7/16-20	203405.3
	290	203406	25	6	1	1/4	Y	29,3	14	41	1 5/16-12	7/16-20	203406.3
	240	203407	30-32	6	1 1/4	1/4	Y	31,8	14	50	1 5/8-12	7/16-20	203407.3
		203408	38	6	1 1/2	1/4	Y	36,4	14	60	1 7/8-12	7/16-20	203408.3
	350	203409	10	8	3/8	5/16	X	17,5	14	19	9/16-18	1/2-20	203409.3
		203410	12	8	1/2	5/16	Y	21,9	14	22	3/4-16	1/2-20	203410.3
		203411	14-15-16	8	5/8	5/16	Y	25,2	14	27	7/8-14	1/2-20	203411.3
		203412	18-20	8	3/4	5/16	Y	26,4	14	32	1 1/16-12	1/2-20	203412.3
	290	203413	25	8	1	5/16	Y	29,3	14	41	1 5/16-12	1/2-20	203413.3
	240	203414	30-32	8	1 1/4	5/16	Y	31,8	14	50	1 5/8-12	1/2-20	203414.3
		203415	38	8	1 1/2	5/16	Y	36,4	14	60	1 7/8-12	1/2-20	203415.3
	350	203416	12	10	1/2	3/8	Y	21,8	14,1	22	3/4-16	9/16-18	203416.3
		203417	14-15-16	10	5/8	3/8	Y	25,1	14,1	27	7/8-14	9/16-18	203417.3
		203418	18-20	10	3/4	3/8	Y	26,3	14,1	32	1 1/16-12	9/16-18	203418.3
	290	203419	25	10	1	3/8	Y	29,2	14,1	41	1 5/16-12	9/16-18	203419.3
	240	203420	30-32	10	1 1/4	3/8	Y	31,7	14,1	50	1 5/8-12	9/16-18	203420.3
		203421	38	10	1 1/2	3/8	Y	36,3	14,1	60	1 7/8-12	9/16-18	203421.3
	350	203422	14-15-16	12	5/8	1/2	X	24,3	16,7	27	7/8-14	3/4-16	203422.3
		203423	18-20	12	3/4	1/2	Y	26,2	16,7	32	1 1/16-12	3/4-16	203423.3
	290	203424	25	12	1	1/2	Y	28,6	16,7	41	1 5/16-12	3/4-16	203424.3
	240	203425	30-32	12	1 1/4	1/2	Y	31,6	16,7	50	1 5/8-12	3/4-16	203425.3
		203426	38	12	1 1/2	1/2	Y	36,2	16,7	60	1 7/8-12	3/4-16	203426.3
	350	203427	18-20	14-15-16	3/4	5/8	X	27,2	19,3	32	1 1/16-12	7/8-14	203427.3
	290	203428	25	14-15-16	1	5/8	Y	24,5	19,3	41	1 5/16-12	7/8-14	203428.3
	240	203429	30-32	14-15-16	1 1/4	5/8	Y	31,5	19,3	50	1 5/8-12	7/8-14	203429.3
		203430	38	14-15-16	1 1/2	5/8	Y	36,1	19,3	60	1 7/8-12	7/8-14	203430.3
	290	203431	25	18-20	1	3/4	Y	28,9	21,9	41	1 5/16-12	1 1/16-12	203431.3
	240	203432	30-32	18-20	1 1/4	3/4	Y	31,4	21,9	50	1 5/8-12	1 1/16-12	203432.3
		203433	38	18-20	1 1/2	3/4	Y	36,5	21,9	60	1 7/8-12	1 1/16-12	203433.3
		203434	30-32	25	1 1/4	1	Y	31,7	23,1	50	1 5/8-12	1 5/16-12	203434.3
		203435	38	25	1 1/2	1	Y	36,3	23,1	60	1 7/8-12	1 5/16-12	203435.3
		203436	38	30-32	1 1/2	1 1/4	Y	36,2	24,3	60	1 7/8-12	1 5/8-12	203436.3

Note: If you wish to order a fitting in stainless steel, please change the first two digit from **20..** to **21..**

MALE STUD COUPLING WITH SWIVEL NUT AND ELASTOMER SEAL
Thread BSP Parallel - Thread Metric Parallel

Type: **2035..**
Type: **2036..**

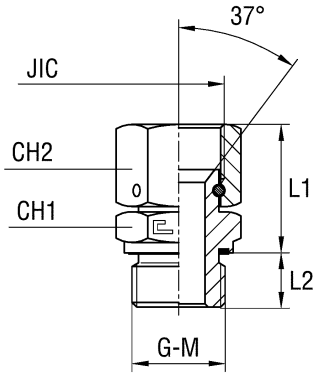

Serie	Bar	Ordering Body	JIC 37°	G	L1	L2	CH1	CH2
UNIVERSAL	350	203501	7/16-20	1/8	26	8	14	14
		203502	1/2-20	1/8	27,5	8	14	17
		203503	9/16-18	1/4	27,8	12	19	19
		203504	3/4-16	3/8	32,1	12	22	22
		203505	7/8-14	1/2	37,6	14	27	27
		203506	11/16-12	3/4	39,2	16	32	32
	290	203507	15/16-12	1	44,4	18	41	41
	240	203508	15/8-12	11/4	47,3	20	50	50
		203509	17/8-12	11/2	54,8	22	55	60
	350	203510	7/16-20	1/4	25,5	12	19	14
		203511	7/16-20	3/8	27,5	12	22	14
		203512	1/2-20	1/4	27	12	19	17
		203513	1/2-20	3/8	29	12	22	17
		203514	9/16-18	3/8	29,8	12	22	19
		203515	9/16-18	1/2	31,3	14	27	19
		203516	3/4-16	1/4	30,1	12	19	22
		203517	3/4-16	1/2	33,6	14	27	22
		203518	7/8-14	3/8	36,1	12	22	27
		203519	7/8-14	3/4	39,1	16	32	27
		203520	11/16-12	1/2	37,7	14	27	32
	290	203521	11/16-12	1	40,7	18	41	32
		203522	15/16-12	3/4	42,9	16	32	41
	240	203523	15/16-12	11/4	46,9	20	50	41
		203524	15/8-12	1	44,8	18	41	50
		203525	17/8-12	11/4	54,3	20	50	60

Note: If you wish to order a fitting in stainless steel, please change the first two digit from **20..** to **21..**
Articles available on scheduled orders only

Serie	Bar	Ordering Body	JIC 37°	M	L1	L2	CH1	CH2
UNIVERSAL	350	203601	7/16-20	10x1	24,5	8	14	14
		203602	1/2-20	12x1,5	26	8	17	17
		203603	9/16-18	14x1,5	26,8	12	19	19
		203604	3/4-16	16x1,5	29,6	12	22	22
		203605	7/8-14	22x1,5	36,1	14	27	27
		203606	11/16-12	27x2	36,7	16	32	32
	290	203607	15/16-12	33x2	41,4	18	41	41
	240	203608	15/8-12	42x2	43,8	20	50	50
		203609	17/8-12	48x2	51,3	22	55	60
	350	203610	7/16-20	12x1,5	24,5	8	17	14
		203611	1/2-20	10x1	26	8	14	17
		203612	1/2-20	14x1,5	26	12	19	17
		203613	9/16-18	16x1,5	27,3	12	22	19
		203614	3/4-16	18x1,5	30,6	12	24	22
		203615	7/8-14	18x1,5	34,6	12	24	27
		203616	7/8-14	20x1,5	35,6	14	27	27
		203617	11/16-12	22x1,5	36,2	14	27	32
	290	203618	15/16-12	27x2	40,4	16	32	41

Note: If you wish to order a fitting in stainless steel, please change the first two digit from **20..** to **21..**
Articles available on scheduled orders only

MALE STUD COUPLING WITH SWIVEL NUT AND O-RING Thread UNF/UN-2A

Type: **2037..**

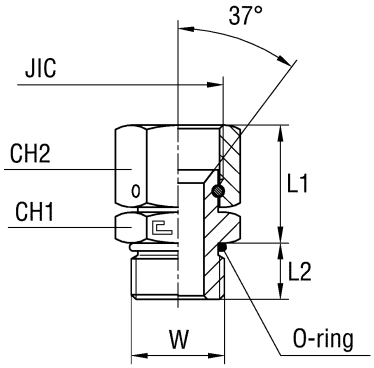

Serie	Bar	Ordering Body	JIC 37°	W	L1	L2	CH1	CH2
UNIVERSAL	350	203701	7/16-20	7/16-20	25,4	9,1	14	14
		203702	1/2-20	1/2-20	26,9	9,1	17	17
		203703	9/16-18	9/16-18	28,8	10	17	19
		203704	3/4-16	3/4-16	32	11,1	22	22
		203705	7/8-14	7/8-14	37,4	12,7	27	27
		203706	11/16-12	11/16-12	39,1	15,1	32	32
	290	203707	15/16-12	15/16-12	43,3	15,1	41	41
	240	203708	15/8-12	15/8-12	45,7	15,1	50	50
		203709	17/8-12	17/8-12	54,7	15,1	55	60
	350	203710	7/16-20	1/2-20	25,4	9,1	17	17
		203711	7/16-20	9/16-18	26,5	10	17	19
		203712	9/16-18	3/4-16	29,7	11,1	22	19
		203713	3/4-16	7/8-14	33,4	12,7	27	22
		203714	3/4-16	11/16-12	35	15,1	32	22
		203715	7/8-14	3/4-16	36	11,1	22	27
		203716	7/8-14	11/16-12	39	15,1	32	27
		203717	11/16-12	3/4-16	37,6	11,1	27	19
		203718	11/16-12	7/8-14	37,5	12,7	27	22
	290	203719	11/16-12	15/16-12	39,6	15,1	41	41
		203720	15/16-12	11/16-12	42,8	15,1	32	32
	240	203721	15/16-12	15/8-12	45,3	15,1	50	50

Note: If you wish to order a fitting in stainless steel, please change the first two digit from **20..** to **21..**
Articles available on scheduled orders only

MALE STUD COUPLING WITH SWIVEL NUT Thread BSP Taper - Thread NPT

Type: **2038..**
Type: **2039..**

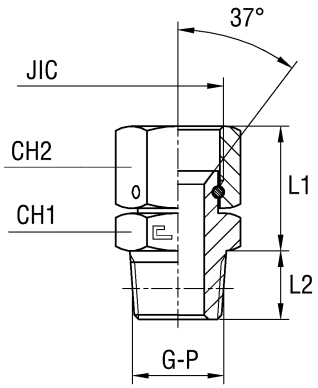

Serie	Bar	Ordering Body	JIC 37°	G	L1	L2	CH1	CH2
UNIVERSAL	350	203801	7/16-20	1/8	24,5	10	12	14
		203802	1/2-20	1/8	26	10	12	17
		203803	9/16-18	1/4	26,8	14,5	14	19
		203804	3/4-16	3/8	30,1	14,5	19	22
		203805	7/8-14	1/2	34,1	19	22	27
		203806	11/16-12	3/4	37,2	19	27	32
	290	203807	15/16-12	1	41,4	24	36	41
	240	203808	15/8-12	11/4	42,8	25	46	50
		203809	17/8-12	11/2	51,8	26	50	60
	350	203810	7/16-20	1/4	24,5	14,5	14	14
		203811	1/2-20	1/4	26	14,5	14	17
		203812	9/16-18	3/8	27,8	14,5	17	19
		203813	3/4-16	1/4	30,1	14,5	19	22
		203814	3/4-16	1/2	30,1	19	22	22
		203815	7/8-14	3/8	34,1	14,5	22	27
		203816	7/8-14	3/4	37,1	19	27	27
		203817	11/16-12	1/2	37,2	19	27	32
	290	203818	11/16-12	1	37,7	24	36	32
		203819	15/16-12	3/4	40,9	19	32	41

Note: If you wish to order a fitting in stainless steel, please change the first two digit from **20..** to **21..**
Articles available on scheduled orders only

Serie	Bar	Ordering Body	JIC 37°	P	L1	L2	CH1	CH2
UNIVERSAL	350	203901	7/16-20	1/8	24,5	10	12	14
		203902	1/2-20	1/8	26	10	12	17
		203903	9/16-18	1/4	26,8	14,5	14	19
		203904	3/4-16	3/8	30,1	14,5	19	22
		203905	7/8-14	1/2	34,1	19	22	27
		203906	11/16-12	3/4	37,2	19	27	32
	290	203907	15/16-12	1	41,4	24	36	41
	240	203908	15/8-12	11/4	42,8	25	46	50
		203909	17/8-12	11/2	51,8	26	50	60
	350	203910	7/16-20	1/4	24,5	14,5	14	14
		203911	1/2-20	1/4	26	14,5	14	17
		203912	9/16-18	1/8	26,8	10	14	19
		203913	9/16-18	3/8	27,8	14,5	17	19
		203914	9/16-18	1/2	27,8	19	22	19
		203915	3/4-16	1/4	30,1	14,5	19	22
		203916	3/4-16	1/2	30,1	19	22	22
		203917	3/4-16	3/4	33,1	19	27	22
		203918	7/8-14	3/8	34,1	14,5	22	27
		203919	7/8-14	3/4	37,1	19	27	27
		203920	11/16-12	1/2	37,2	19	27	32
	290	203921	15/16-12	3/4	40,9	19	32	41
	240	203922	15/8-12	1	42,3	24	41	50

Note: If you wish to order a fitting in stainless steel, please change the first two digit from **20..** to **21..**
Articles available on scheduled orders only

ADJUSTABEL ELBOW WITH SWIVEL NUT Thread UNF/UN-2B

Type: **2040..** With O-ring

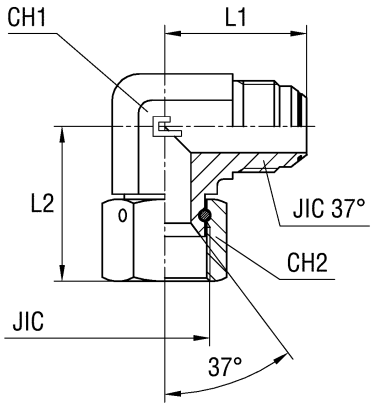

Type: **2040...3** Standard

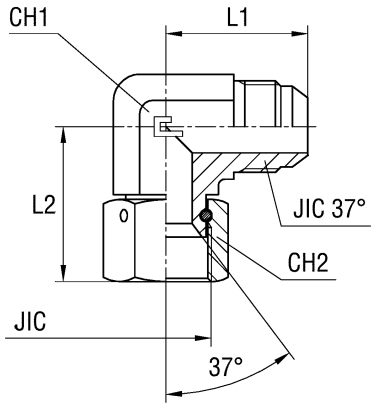

Serie	Bar	Ordering O-ring Body	Ø Tube M	Ø Tube W	JIC 37°	L1	L2	CH1	CH2	Ordering Standard Body
UNIVERSAL	450	204001	6	1/4	7/16-20	23	26,5	11	14	204001.3
		204002	8	5/16	1/2-20	24	27	14	17	204002.3
	350	204003	10	3/8	9/16-18	27,5	31,3	14	19	204003.3
		204004	12	1/2	3/4-16	32	35,6	19	22	204004.3
		204005	14-15-16	5/8	7/8-14	37	41,6	22	27	204005.3
		204006	18-20	3/4	11/16-12	42	44,2	27	32	204006.3
	290	204007	25	1	15/16-12	46	51,4	33	41	204007.3
	240	204008	30-32	11/4	15/8-12	53	58,8	41	50	204008.3
		204009	38	11/2	17/8-12	59	66,3	48	60	204009.3

Note: If you wish to order a fitting in stainless steel, please change the first two digit from **20..** to **21..**

ADJUSTABEL 45° ELBOW WITH SWIVEL NUT Thread UNF/UN-2B

Type: **2041..** With O-ring

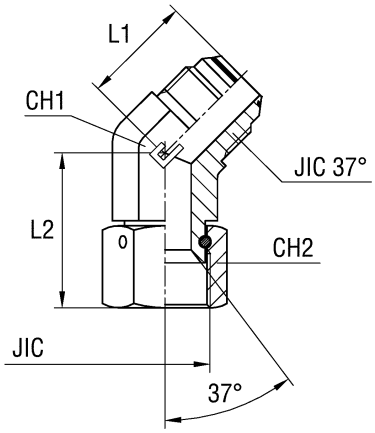

Type: **2041...3** Standard

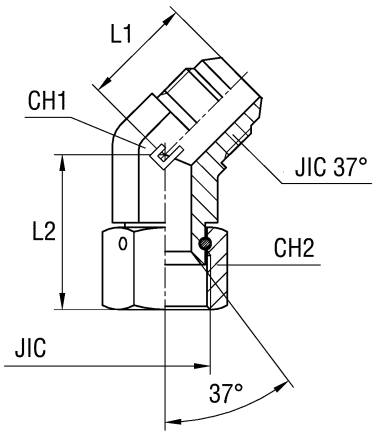

Serie	Bar	Ordering O-ring Body	Ø Tube M	Ø Tube W	JIC 37°	L1	L2	CH1	CH2	Ordering Standard Body
UNIVERSAL	450	204101	6	1/4	7/16-20	19,5	24,5	11	14	204101.3
		204102	8	5/16	1/2-20	20	25,5	14	17	204102.3
	350	204103	10	3/8	9/16-18	21,5	27,3	14	19	204103.3
		204104	12	1/2	3/4-16	25,5	33,1	19	22	204104.3
		204105	14-15-16	5/8	7/8-14	29	36,6	22	27	204105.3
		204106	18-20	3/4	11/16-12	33	37,2	27	32	204106.3
	290	204107	25	1	15/16-12	38	45,4	33	41	204107.3
	240	204108	30-32	11/4	15/8-12	40	51,3	41	50	204108.3
		204109	38	11/2	17/8-12	45	57,8	48	60	204109.3

Note: If you wish to order a fitting in stainless steel, please change the first two digit from **20..** to **21..**

ADJUSTABLE BARREL TEE WITH SWIVEL NUT Thread UNF/UN-2B

Type: **2042..** With O-ring

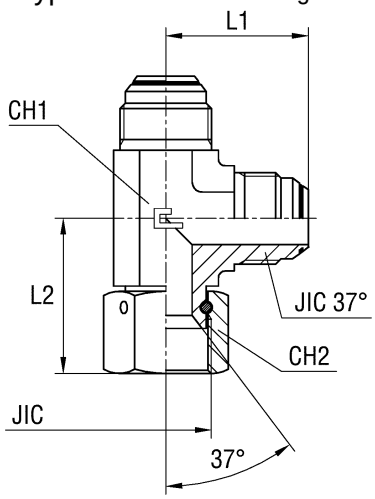

Type: **2042…3** Standard

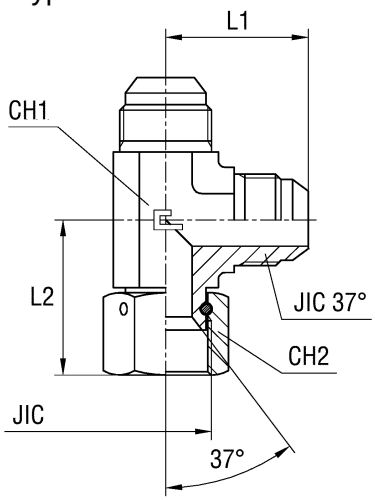

Serie	Bar	Ordering O-ring Body	Ø Tube M	Ø Tube W	JIC 37°	L1	L2	CH1	CH2	Ordering Standard Body
UNIVERSAL	450	204201	6	1/4	7/16-20	23	26,5	11	14	204201.3
		204202	8	5/16	1/2-20	24	27	14	17	204202.3
	350	204203	10	3/8	9/16-18	27,5	31,3	14	19	204203.3
		204204	12	1/2	3/4-16	32	35,6	19	22	204204.3
		204205	14-15-16	5/8	7/8-14	37	41,6	22	27	204205.3
		204206	18-20	3/4	11/16-12	42	44,2	27	32	204206.3
	290	204207	25	1	15/16-12	46	51,4	33	41	204207.3
	240	204208	30-32	1 1/4	15/8-12	53	58,8	41	50	204208.3
		204209	38	1 1/2	17/8-12	59	66,3	48	60	204209.3

Note: If you wish to order a fitting in stainless steel, please change the first two digit from **20..** to **21..**
Articles available on scheduled orders only

ADJUSTABLE BRANCH TEE WITH SWIVEL NUT Thread UNF/UN-2B

Type: **2043..** With O-ring

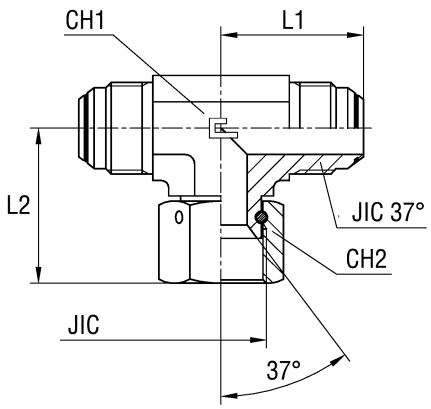

Type: **2043…3** Standard

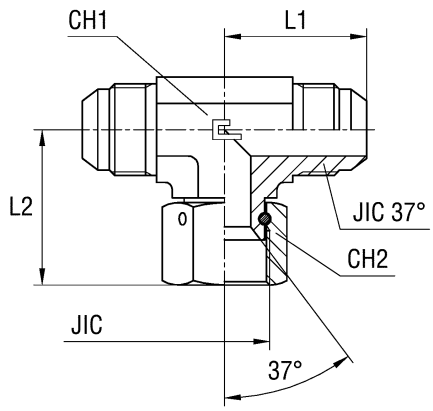

Serie	Bar	Ordering O-ring Body	Ø Tube M	Ø Tube W	JIC 37°	L1	L2	CH1	CH2	Ordering Standard Body
UNIVERSAL	450	204301	6	1/4	7/16-20	23	26,5	11	14	204301.3
		204302	8	5/16	1/2-20	24	27	14	17	204302.3
	350	204303	10	3/8	9/16-18	27,5	31,3	14	19	204303.3
		204304	12	1/2	3/4-16	32	35,6	19	22	204304.3
		204305	14-15-16	5/8	7/8-14	37	41,6	22	27	204305.3
		204306	18-20	3/4	11/16-12	42	44,2	27	32	204306.3
	290	204307	25	1	15/16-12	46	51,4	33	41	204307.3
	240	204308	30-32	1 1/4	15/8-12	53	58,8	41	50	204308.3
		204309	38	1 1/2	17/8-12	59	66,3	48	60	204309.3

Note: If you wish to order a fitting in stainless steel, please change the first two digit from **20..** to **21..**
Articles available on scheduled orders only

ADJUSTABLE MALE STUD ELBOW WITH O-RING AND WASHER
Thread BSP Parallel - Thread Metric Parallel

Type: **2044..** With O-ring
Type: **2045..** With O-ring

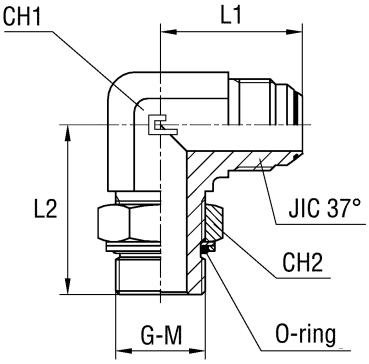

Type: **2044...3** Standard
Type: **2045...3** Standard

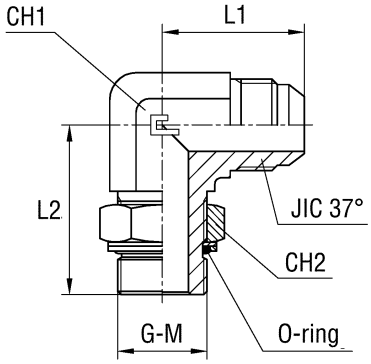

Serie	Bar	Ordering O-ring Body	Ø Tube M	Ø Tube W	G	L1	L2	CH1	CH2	JIC 37°	Ordering Standard Body
UNIVERSAL	350	204401	6	1/4	1/8	23	26	11	14	7/16-20	204401.3
	315	204402	8	5/16	1/4	24	32	14	19	1/2-20	204402.3
		204403	10	3/8	1/4	27,5	32	14	19	9/16-18	204403.3
	250	204404	12	1/2	3/8	32	37	19	22	3/4-16	204404.3
		204405	14-15-16	5/8	1/2	37	43	22	27	7/8-14	204405.3
		204406	18-20	3/4	3/4	42	49	27	36	1 1/16-12	204406.3
	200	204407	25	1	1	46	52	33	41	1 5/16-12	204407.3
		204408	30-32	1 1/4	1 1/4	53	58	41	50	1 5/8-12	204408.3
	160	204409	38	1 1/2	1 1/2	59	60	48	55	1 7/8-12	204409.3
	315	204410	6	1/4	1/4	24	32	14	19	7/16-20	204410.3
	250	204411	6	1/4	3/8	29	37	19	22	7/16-20	204411.3
		204412	6	1/4	1/2	31	43	22	27	7/16-20	204412.3
	350	204413	8	5/16	1/8	24	30	14	14	1/2-20	204413.3
	250	204414	8	5/16	3/8	29	37	19	22	1/2-20	204414.3
		204415	10	3/8	3/8	29,5	37	19	22	9/16-18	204415.3
		204416	10	3/8	1/2	31,5	43	22	27	9/16-18	204416.3
	315	204417	12	1/2	1/4	32	37	19	19	3/4-16	204417.3
	250	204418	12	1/2	1/2	34	43	22	27	3/4-16	204418.3
		204419	12	1/2	3/4	36	49	27	36	3/4-16	204419.3
		204420	14-15-16	5/8	3/8	37	37,5	22	22	7/8-14	204420.3
		204421	14-15-16	5/8	3/4	39	49	27	36	7/8-14	204421.3
		204422	18-20	3/4	1/2	42	47	27	27	1 1/16-12	204422.3
	200	204423	18-20	3/4	1	45	52	33	41	1 1/16-12	204423.3
	250	204424	25	1	3/4	46	50	33	36	1 5/16-12	204424.3
	200	204425	25	1	1 1/4	52	58	41	50	1 5/16-12	204425.3
		204426	30-32	1 1/4	1	53	58	41	41	1 5/8-12	204426.3
		204427	38	1 1/2	1 1/4	59	60	48	50	1 7/8-12	204427.3

Note: If you wish to order a fitting in stainless steel, please change the first two digit from **20..** to **21..**

Serie	Bar	Ordering O-ring Body	Ø Tube M	Ø Tube W	M	L1	L2	CH1	CH2	JIC 37°	Ordering Standard Body
UNIVERSAL	350	204501	6	1/4	10x1	23	27	11	14	7/16-20	204501.3
	315	204502	8	5/16	12x1,5	24	31	14	17	1/2-20	204502.3
		204503	10	3/8	14x1,5	27,5	33	14	19	9/16-18	204503.3
		204504	12	1/2	16x1,5	32	38	19	22	3/4-16	204504.3
	250	204505	14-15-16	5/8	22x1,5	37	42	22	27	7/8-14	204505.3
		204506	18-20	3/4	27x2	42	50,5	27	32	1 1/16-12	204506.3
	200	204507	25	1	33x2	46	52,5	33	41	1 5/16-12	204507.3
		204508	30-32	1 1/4	42x2	53	58	41	50	1 5/8-12	204508.3
	160	204509	38	1 1/2	48x2	59	63	48	55	1 7/8-12	204509.3
	315	204510	6	1/4	12x1,5	24	31	14	17	7/16-20	204510.3
	350	204511	8	5/16	10x1	24	28	14	14	1/2-20	204511.3
	315	204512	8	5/16	14x1,5	24	33	14	19	1/2-20	204512.3
		204513	10	3/8	16x1,5	29,5	38	19	22	9/16-18	204513.3
		204514	12	1/2	18x1,5	32	38	19	24	3/4-16	204514.3
		204515	14-15-16	5/8	18x1,5	37	40	22	24	7/8-14	204515.3
	250	204516	14-15-16	5/8	20x1,5	37	42	22	27	7/8-14	204516.3
		204517	18-20	3/4	22x1,5	42	46	27	27	1 1/16-12	204517.3
		204518	25	1	27x2	46	52,5	33	32	1 5/16-12	204518.3

Note: If you wish to order a fitting in stainless steel, please change the first two digit from **20..** to **21..**
Articles available on scheduled orders only

ADJUSTABLE MALE STUD ELBOW WITH O-RING Thread UNF/UN-2A

Type: **2046..** With O-ring

Type: **2046...3** Standard

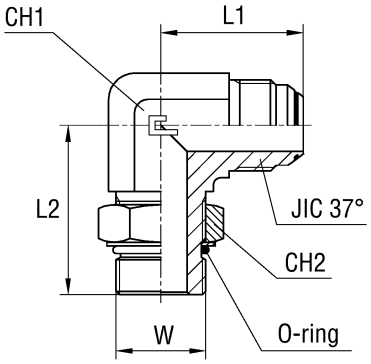

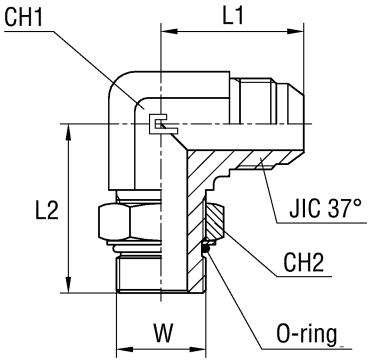

Serie	Bar	Ordering O-ring Body	Ø Tube M	Ø Tube W	W	L1	L2	CH1	CH2	JIC 37°	Ordering Standard Body
UNIVERSAL	400	204601	6	1/4	7/16-20	23	27	11	14	7/16-20	204601.3
		204602	8	5/16	1/2-20	24	29	14	17	1/2-20	204602.3
	350	204603	10	3/8	9/16-18	27,5	32	14	17	9/16-18	204603.3
		204604	12	1/2	3/4-16	32	37	19	22	3/4-16	204604.3
		204605	14-15-16	5/8	7/8-14	37	43	22	27	7/8-14	204605.3
		204606	18-20	3/4	11/16-12	42	49,5	27	32	11/16-12	204606.3
	290	204607	25	1	15/16-12	46	52	33	41	15/16-12	204607.3
	240	204608	30-32	11/4	15/8-12	53	58	41	50	15/8-12	204608.3
		204609	38	11/2	17/8-12	59	60	48	55	17/8-12	204609.3
	400	204610	6	1/4	1/2-20	24	29	14	17	7/16-20	204610.3
	350	204611	6	1/4	9/16-18	24	32	14	17	7/16-20	204611.3
		204612	8	5/16	9/16-18	24	32	14	17	1/2-20	204612.3
		204613	10	3/8	7/16-20	27,5	28	14	14	9/16-18	204613.3
		204614	10	3/8	1/2-20	27,5	29	14	17	9/16-18	204614.3
		204615	10	3/8	3/4-16	29,5	37	19	22	9/16-18	204615.3
		204616	10	3/8	7/8-14	31,5	43	22	27	9/16-18	204616.3
		204617	12	1/2	9/16-18	32	36,5	19	17	3/4-16	204617.3
		204618	12	1/2	7/8-14	34	43	22	27	3/4-16	204618.3
		204619	12	1/2	11/16-12	36	49,5	27	32	3/4-16	204619.3
		204620	14-15-16	5/8	3/4-16	37	39,5	22	22	7/8-14	204620.3
		204621	14-15-16	5/8	11/16-12	39	49,5	27	32	7/8-14	204621.3
		204622	18-20	3/4	3/4-16	42	41,5	27	22	11/16-12	204622.3
		204623	18-20	3/4	7/8-14	42	47	27	27	11/16-12	204623.3
	290	204624	18-20	3/4	15/16-12	45	52	33	41	11/16-12	204624.3
		204625	25	1	11/16-12	46	49,5	33	32	15/16-12	204625.3
	240	204626	25	1	15/8-12	52	58	41	50	15/16-12	204626.3

Note: If you wish to order a fitting in stainless steel, please change the first two digit from **20..** to **21..**
Articles available on scheduled orders only

45° ADJUSTABLE MALE STUD ELBOW WITH O-RING AND WASHER
Thread BSP Parallel - Thread Metric Parallel

Type: **2047..** With O-ring
Type: **2048..** With O-ring

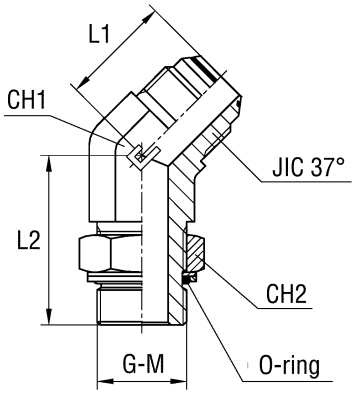

Type: **2047...3** Standard
Type: **2048...3** Standard

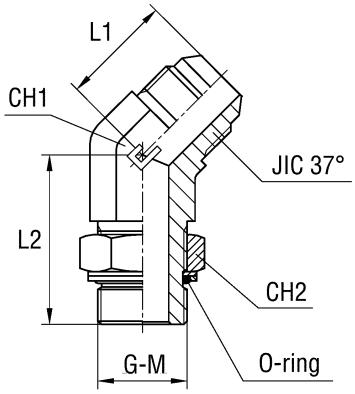

Serie	Bar	Ordering O-ring Body	Ø Tube M	Ø Tube W	G	L1	L2	CH1	CH2	JIC 37°	Ordering Standard Body
UNIVERSAL	350	204701	6	1/4	1/8	19,5	26	11	14	7/16-20	204701.3
	315	204702	8	5/16	1/4	20	29	14	19	1/2-20	204702.3
		204703	10	3/8	1/4	21,5	29	14	19	9/16-18	204703.3
	250	204704	12	1/2	3/8	25,5	33	19	22	3/4-16	204704.3
		204705	14-15-16	5/8	1/2	29	38,5	22	27	7/8-14	204705.3
		204706	18-20	3/4	3/4	33	44	27	36	11/16-12	204706.3
	200	204707	25	1	1	38	47	33	41	15/16-12	204707.3
		204708	30-32	1 1/4	1 1/4	40	48	41	50	15/8-12	204708.3
	160	204709	38	1 1/2	1 1/2	46	48	48	55	17/8-12	204709.3
	315	204710	6	1/4	1/4	20	29	14	19	7/16-20	204710.3
	250	204711	6	1/4	3/8	22,5	33	19	22	7/16-20	204711.3
		204712	6	1/4	1/2	23	38,5	22	27	7/16-20	204712.3
	350	204713	8	5/16	1/8	20	24	14	14	1/2-20	204713.3
	250	204714	8	5/16	3/8	22,5	33	19	22	1/2-20	204714.3
		204715	10	3/8	3/8	23	33	19	22	9/16-18	204715.3
		204716	10	3/8	1/2	23,5	38,5	22	27	9/16-18	204716.3
	315	204717	12	1/2	1/4	25,5	32,5	19	19	3/4-16	204717.3
	250	204718	12	1/2	1/2	26	38,5	22	27	3/4-16	204718.3
		204719	12	1/2	3/4	27	44	27	36	3/4-16	204719.3
		204720	14-15-16	5/8	3/8	29	33	22	22	7/8-14	204720.3
		204721	14-15-16	5/8	3/4	30	44	27	36	7/8-14	204721.3
		204722	18-20	3/4	1/2	33	43	27	27	11/16-12	204722.3
	200	204723	18-20	3/4	1	37	47	33	41	11/16-12	204723.3
	250	204724	25	1	3/4	38	45	33	36	15/16-12	204724.3
	200	204725	25	1	1 1/4	39	48	41	50	15/16-12	204725.3
		204726	30-32	1 1/4	1	40	48	41	41	15/8-12	204726.3
		204727	38	1 1/2	1 1/4	46	48	48	50	17/8-12	204727.3

Note: If you wish to order a fitting in stainless steel, please change the first two digit from **20..** to **21..**
Articles available on scheduled orders only .

Serie	Bar	Ordering O-ring Body	Ø Tube M	Ø Tube W	M	L1	L2	CH1	CH2	JIC 37°	Ordering Standard Body
UNIVERSAL	350	204801	6	1/4	10x1	19,5	27	11	14	7/16-20	204801.3
	315	204802	8	5/16	12x1,5	20	27	14	17	1/2-20	204802.3
		204803	10	3/8	14x1,5	21,5	28	14	19	9/16-18	204803.3
		204804	12	1/2	16x1,5	25,5	33	19	22	3/4-16	204804.3
	250	204805	14-15-16	5/8	22x1,5	29	38	22	27	7/8-14	204805.3
		204806	18-20	3/4	27x2	33	46	27	32	11/16-12	204806.3
	200	204807	25	1	33x2	38	46	33	41	15/16-12	204807.3
		204808	30-32	1 1/4	42x2	40	48	41	50	15/8-12	204808.3
	160	204809	38	1 1/2	48x2	46	50	48	55	17/8-12	204809.3
	315	204810	6	1/4	12x1,5	20	27	14	17	7/16-20	204810.3
	350	204811	8	5/16	10x1	20	24	14	14	1/2-20	204811.3
	315	204812	8	5/16	14x1,5	20	28	14	19	1/2-20	204812.3
		204813	10	3/8	16x1,5	23	33	19	22	9/16-18	204813.3
		204814	12	1/2	18x1,5	25,5	33	19	24	3/4-16	204814.3
		204815	14-15-16	5/8	18x1,5	29	34,5	22	24	7/8-14	204815.3
	250	204816	14-15-16	5/8	20x1,5	29	38	22	27	7/8-14	204816.3
		204817	18-20	3/4	22x1,5	33	41,5	27	27	11/16-12	204817.3
		204818	25	1	27x2	38	46	33	32	15/16-12	204818.3

Note: If you wish to order a fitting in stainless steel, please change the first two digit from **20..** to **21..**
Articles available on scheduled orders only

45° ADJUSTABLE MALE STUD ELBOW WITH O-RING Thread UNF/UN-2A

Type: **2049..** With O-ring

Type: **2049...3** Standard

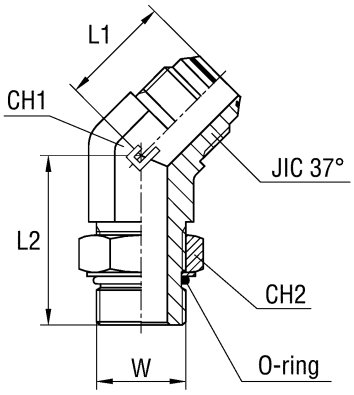

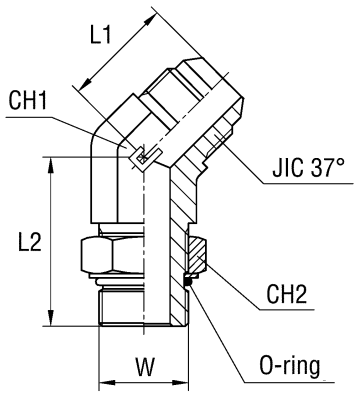

Serie	Bar	Ordering O-ring Body	Ø Tube M	Ø Tube W	W	L1	L2	CH1	CH2	JIC 37°	Ordering Standard Body
UNIVERSAL	400	204901	6	1/4	7/16-20	19,5	26,5	11	14	7/16-20	204901.3
		204902	8	5/16	1/2-20	20	26,5	14	17	1/2-20	204902.3
	350	204903	10	3/8	9/16-18	21,5	29	14	17	9/16-18	204903.3
		204904	12	1/2	3/4-16	25,5	33	19	22	3/4-16	204904.3
		204905	14-15-16	5/8	7/8-14	29	39	22	27	7/8-14	204905.3
		204906	18-20	3/4	11/16-12	33	44	27	32	11/16-12	204906.3
	290	204907	25	1	15/16-12	38	47	33	41	15/16-12	204907.3
	240	204908	30-32	11/4	15/8-12	40	48	41	50	15/8-12	204908.3
		204909	38	11/2	17/8-12	46	48,5	48	55	17/8-12	204909.3
	400	204910	6	1/4	1/2-20	20	26,5	14	17	7/16-20	204910.3
	350	204911	10	3/8	3/4-16	23	33	19	22	9/16-18	204911.3
		204912	12	1/2	7/8-14	26	39	22	27	3/4-16	204912.3
		204913	14-15-16	5/8	3/4-16	29	35,5	22	22	7/8-14	204913.3
		204914	18-20	3/4	3/4-16	33	36	27	22	11/16-12	204914.3
		204915	18-20	3/4	7/8-14	33	39	27	27	11/16-12	204915.3
	290	204916	18-20	3/4	15/16-12	37	47	33	41	11/16-12	204916.3
		204917	25	1	11/16-12	38	46,5	33	32	15/16-12	204917.3
	240	204918	25	1	15/8-12	39	48	41	50	15/16-12	204918.3

Note: If you wish to order a fitting in stainless steel, please change the first two digit from **20..** to **21..**
Articles available on scheduled orders only

ADJUSTABLE MALE STUD BARREL TEE WITH O-RING AND WASHER
Thread BSP Parallel - Thread Metric Parallel

Type: **2050..** With O-ring
Type: **2051..** With O-ring

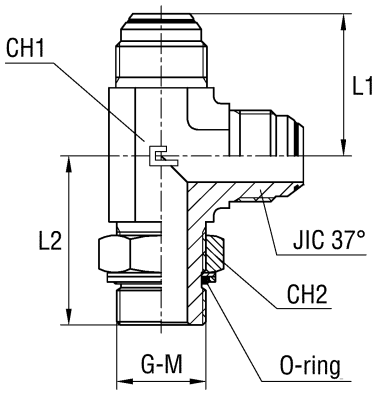

Type: **2050...3** Standard
Type: **2051...3** Standard

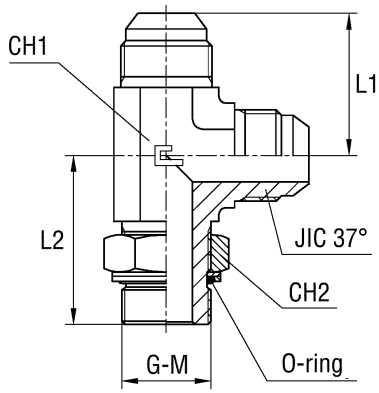

Serie	Bar	Ordering O-ring Body	Ø Tube M	Ø Tube W	G	L1	L2	CH1	CH2	JIC 37°	Ordering Standard Body
UNIVERSAL	350	205001	6	1/4	1/8	23	26	11	14	7/16-20	205001.3
	315	205002	8	5/16	1/4	24	32	14	19	1/2-20	205002.3
		205003	10	3/8	1/4	27,5	32	14	19	9/16-18	205003.3
	250	205004	12	1/2	3/8	32	37	19	22	3/4-16	205004.3
		205005	14-15-16	5/8	1/2	37	43	22	27	7/8-14	205005.3
		205006	18-20	3/4	3/4	42	49	27	36	11/16-12	205006.3
	200	205007	25	1	1	46	52	33	41	15/16-12	205007.3
		205008	30-32	11/4	11/4	53	58	41	50	15/8-12	205008.3
	160	205009	38	11/2	11/2	59	60	48	55	17/8-12	205009.3
	315	205010	6	1/4	1/4	24	32	14	19	7/16-20	205010.3
	250	205011	6	1/4	3/8	29	37	19	22	7/16-20	205011.3
		205012	6	1/4	1/2	31	43	22	27	7/16-20	205012.3
	350	205013	8	5/16	1/8	24	30	14	14	1/2-20	205013.3
	250	205014	8	5/16	3/8	29	37	19	22	1/2-20	205014.3
		205015	10	3/8	3/8	29,5	37	19	22	9/16-18	205015.3
		205016	10	3/8	1/2	31,5	43	22	27	9/16-18	205016.3
	315	205017	12	1/2	1/4	32	37	19	19	3/4-16	205017.3
	250	205018	12	1/2	1/2	34	43	22	27	3/4-16	205018.3
		205019	12	1/2	3/4	36	49	27	36	3/4-16	205019.3
		205020	14-15-16	5/8	3/8	37	37,5	22	22	7/8-14	205020.3
		205021	14-15-16	5/8	3/4	39	49	27	36	7/8-14	205021.3
		205022	18-20	3/4	1/2	42	47	27	27	11/16-12	205022.3
	200	205023	18-20	3/4	1	45	52	33	41	11/16-12	205023.3
	250	205024	25	1	3/4	46	50	33	36	15/16-12	205024.3
	200	205025	25	1	11/4	52	58	41	50	15/16-12	205025.3
		205026	30-32	11/4	1	53	58	41	41	15/8-12	205026.3
		205027	38	11/2	11/4	59	60	48	50	17/8-12	205027.3

Note: If you wish to order a fitting in stainless steel, please change the first two digit from **20..** to **21..**

Serie	Bar	Ordering O-ring Body	Ø Tube M	Ø Tube W	M	L1	L2	CH1	CH2	JIC 37°	Ordering Standard Body
UNIVERSAL	350	205101	6	1/4	10x1	23	27	11	14	7/16-20	205101.3
	315	205102	8	5/16	12x1,5	24	31	14	17	1/2-20	205102.3
		205103	10	3/8	14x1,5	27,5	33	14	19	9/16-18	205103.3
		205104	12	1/2	16x1,5	32	38	19	22	3/4-16	205104.3
	250	205105	14-15-16	5/8	22x1,5	37	42	22	27	7/8-14	205105.3
		205106	18-20	3/4	27x2	42	50,5	27	32	11/16-12	205106.3
	200	205107	25	1	33x2	46	52,5	33	41	15/16-12	205107.3
		205108	30-32	11/4	42x2	53	58	41	50	15/8-12	205108.3
	160	205109	38	11/2	48x2	59	63	48	55	17/8-12	205109.3
	315	205110	6	1/4	12x1,5	24	31	14	17	7/16-20	205110.3
	350	205111	8	5/16	10x1	24	28	14	14	1/2-20	205111.3
	315	205112	8	5/16	14x1,5	24	33	14	19	1/2-20	205112.3
		205113	10	3/8	16x1,5	29,5	38	19	22	9/16-18	205113.3
		205114	12	1/2	18x1,5	32	38	19	24	3/4-16	205114.3
		205115	14-15-16	5/8	18x1,5	37	40	22	24	7/8-14	205115.3
	250	205116	14-15-16	5/8	20x1,5	37	42	22	27	7/8-14	205116.3
		205117	18-20	3/4	22x1,5	42	46	27	27	11/16-12	205117.3
		205118	25	1	27x2	46	52,5	33	32	15/16-12	205118.3

Note: If you wish to order a fitting in stainless steel, please change the first two digit from **20..** to **21..**
Articles available on scheduled orders only

ADJUSTABLE MALE STUD BARREL TEE WITH O-RING Thread UNF/UN-2A

Type: **2052..** With O-ring

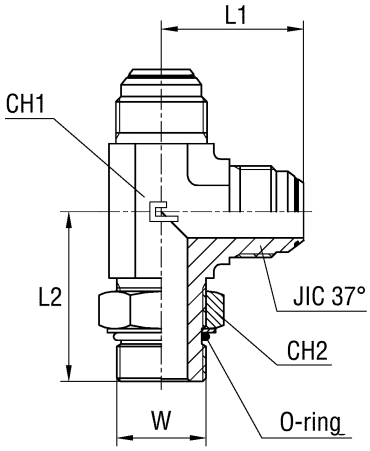

Type: **2052…3** Standard

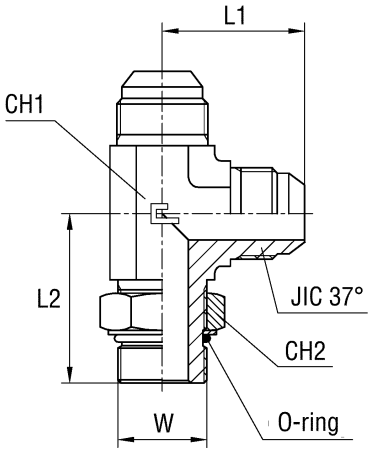

Serie	Bar	Ordering O-ring Body	Ø Tube M	Ø Tube W	W	L1	L2	CH1	CH2	JIC 37°	Ordering Standard Body
UNIVERSAL	400	205201	6	1/4	7/16-20	23	27	11	14	7/16-20	205201.3
		205202	8	5/16	1/2-20	24	29	14	17	1/2-20	205202.3
	350	205203	10	3/8	9/16-18	27,5	32	14	17	9/16-18	205203.3
		205204	12	1/2	3/4-16	32	37	19	22	3/4-16	205204.3
		205205	14-15-16	5/8	7/8-14	37	43	22	27	7/8-14	205205.3
		205206	18-20	3/4	11/16-12	42	49,5	27	32	11/16-12	205206.3
	290	205207	25	1	15/16-12	46	52	33	41	15/16-12	205207.3
	240	205208	30-32	11/4	15/8-12	53	58	41	50	15/8-12	205208.3
		205209	38	11/2	17/8-12	59	60	48	55	17/8-12	205209.3
	400	205210	6	1/4	1/2-20	24	29	14	17	7/16-20	205210.3
	350	205211	6	1/4	9/16-18	24	32	14	17	7/16-20	205211.3
		205212	10	3/8	3/4-16	29,5	37	19	22	9/16-18	205212.3
		205213	12	1/2	7/8-14	34	43	22	27	3/4-16	205213.3
		205214	12	1/2	11/16-12	36	49,5	27	32	3/4-16	205214.3
		205215	14-15-16	5/8	3/4-16	37	39,5	22	22	7/8-14	205215.3
		205216	14-15-16	5/8	11/16-12	39	49,5	27	32	7/8-14	205216.3
		205217	18-20	3/4	3/4-16	42	41,5	27	22	11/16-12	205217.3
		205218	18-20	3/4	7/8-14	42	47	27	27	11/16-12	205218.3
	290	205219	18-20	3/4	15/16-12	45	52	33	41	11/16-12	205219.3
		205220	25	1	11/16-12	46	49,5	33	32	15/16-12	205220.3
	240	205221	25	1	15/8-12	52	58	41	50	15/16-12	205221.3

Note: If you wish to order a fitting in stainless steel, please change the first two digit from **20..** to **21..**
Articles available on scheduled orders only

ADJUSTABLE MALE STUD BRANCH TEE WITH O-RING AND WASHER
Thread BSP Parallel - Thread Metric Parallel

Type: **2053..** With O-ring
Type: **2054..** With O-ring

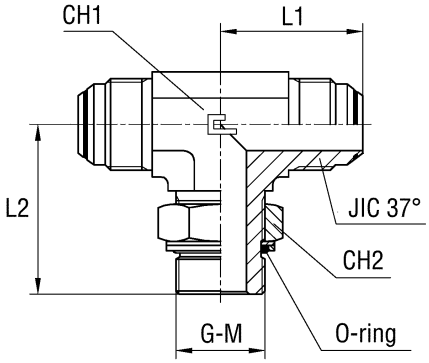

Type: **2053...3** Standard
Type: **2054...3** Standard

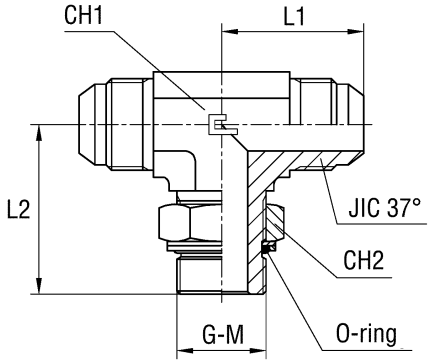

Serie	Bar	Ordering O-ring Body	Ø Tube M	Ø Tube W	G	L1	L2	CH1	CH2	JIC 37°	Ordering Standard Body
UNIVERSAL	350	205301	6	1/4	1/8	23	26	11	14	7/16-20	205301.3
	315	205302	8	5/16	1/4	24	32	14	19	1/2-20	205302.3
		205303	10	3/8	1/4	27,5	32	14	19	9/16-18	205303.3
	250	205304	12	1/2	3/8	32	37	19	22	3/4-16	205304.3
		205305	14-15-16	5/8	1/2	37	43	22	27	7/8-14	205305.3
		205306	18-20	3/4	3/4	42	49	27	36	11/16-12	205306.3
	200	205307	25	1	1	46	52	33	41	15/16-12	205307.3
		205308	30-32	1 1/4	1 1/4	53	58	41	50	15/8-12	205308.3
	160	205309	38	1 1/2	1 1/2	59	60	48	55	17/8-12	205309.3
	315	205310	6	1/4	1/4	24	32	14	19	7/16-20	205310.3
	250	205311	6	1/4	3/8	29	37	19	22	7/16-20	205311.3
		205312	6	1/4	1/2	31	43	22	27	7/16-20	205312.3
	350	205313	8	5/16	1/8	24	30	14	14	1/2-20	205313.3
	250	205314	8	5/16	3/8	29	37	19	22	1/2-20	205314.3
		205315	10	3/8	3/8	29,5	37	19	22	9/16-18	205315.3
		205316	10	3/8	1/2	31,5	43	22	27	9/16-18	205316.3
	315	205317	12	1/2	1/4	32	37	19	19	3/4-16	205317.3
	250	205318	12	1/2	1/2	34	43	22	27	3/4-16	205318.3
		205319	12	1/2	3/4	36	49	27	36	3/4-16	205319.3
		205320	14-15-16	5/8	3/8	37	37,5	22	22	7/8-14	205320.3
		205321	14-15-16	5/8	3/4	39	49	27	36	7/8-14	205321.3
		205322	18-20	3/4	1/2	42	47	27	27	11/16-12	205322.3
	200	205323	18-20	3/4	1	45	52	33	41	11/16-12	205323.3
	250	205324	25	1	3/4	46	50	33	36	15/16-12	205324.3
	200	205325	25	1	1 1/4	52	58	41	50	15/16-12	205325.3
		205326	30-32	1 1/4	1	53	58	41	41	15/8-12	205326.3
		205327	38	1 1/2	1 1/4	59	60	48	50	17/8-12	205327.3

Note: If you wish to order a fitting in stainless steel, please change the first two digit from **20..** to **21..**

Serie	Bar	Ordering O-ring Body	Ø Tube M	Ø Tube W	M	L1	L2	CH1	CH2	JIC 37°	Ordering Standard Body
UNIVERSAL	350	205401	6	1/4	10x1	23	27	11	14	7/16-20	205401.3
	315	205402	8	5/16	12x1,5	24	31	14	17	1/2-20	205402.3
		205403	10	3/8	14x1,5	27,5	33	14	19	9/16-18	205403.3
		205404	12	1/2	16x1,5	32	38	19	22	3/4-16	205404.3
	250	205405	14-15-16	5/8	22x1,5	37	42	22	27	7/8-14	205405.3
		205406	18-20	3/4	27x2	42	50,5	27	32	11/16-12	205406.3
	200	205407	25	1	33x2	46	52,5	33	41	15/16-12	205407.3
		205408	30-32	1 1/4	42x2	53	58	41	50	15/8-12	205408.3
	160	205409	38	1 1/2	48x2	59	63	48	55	17/8-12	205409.3
	315	205410	6	1/4	12x1,5	24	31	14	17	7/16-20	205410.3
	350	205411	8	5/16	10x1	24	28	14	14	1/2-20	205411.3
	315	205412	8	5/16	14x1,5	24	33	14	19	1/2-20	205412.3
		205413	10	3/8	16x1,5	29,5	38	19	22	9/16-18	205413.3
		205414	12	1/2	18x1,5	32	38	19	24	3/4-16	205414.3
		205415	14-15-16	5/8	18x1,5	37	40	22	24	7/8-14	205415.3
	250	205416	14-15-16	5/8	20x1,5	37	42	22	27	7/8-14	205416.3
		205417	18-20	3/4	22x1,5	42	46	27	27	11/16-12	205417.3
		205418	25	1	27x2	46	52,5	33	32	15/16-12	205418.3

Note: If you wish to order a fitting in stainless steel, please change the first two digit from **20..** to **21..**
Articles available on scheduled orders only .

ADJUSTABLE MALE STUD BRANCH TEE WITH O-RING Thread UNF/UN-2A

Type: **2055..** With O-ring

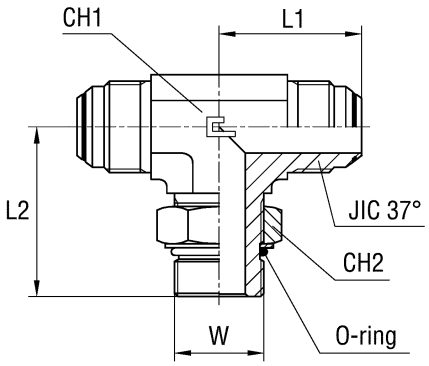

Type: **2055…3** Standard

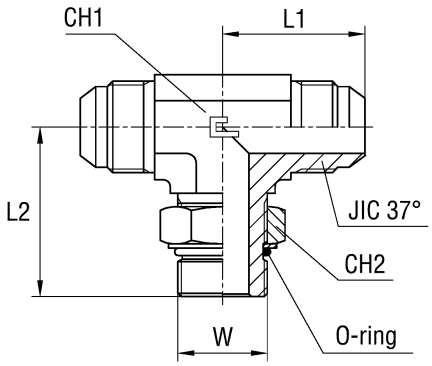

Serie	Bar	Ordering O-ring Body	Ø Tube M	Ø Tube W	W	L1	L2	CH1	CH2	JIC 37°	Ordering Standard Body
UNIVERSAL	400	205501	6	1/4	7/16-20	23	27	11	14	7/16-20	205501.3
		205502	8	5/16	1/2-20	24	29	14	17	1/2-20	205502.3
	350	205503	10	3/8	9/16-18	27,5	32	14	17	9/16-18	205503.3
		205504	12	1/2	3/4-16	32	37	19	22	3/4-16	205504.3
		205505	14-15-16	5/8	7/8-14	37	43	22	27	7/8-14	205505.3
		205506	18-20	3/4	11/16-12	42	49,5	27	32	11/16-12	205506.3
	290	205507	25	1	15/16-12	46	52	33	41	15/16-12	205507.3
	240	205508	30-32	11/4	15/8-12	53	58	41	50	15/8-12	205508.3
		205509	38	11/2	17/8-12	59	60	48	55	17/8-12	205509.3
	400	205510	6	1/4	1/2-20	24	29	14	17	7/16-20	205510.3
	350	205511	6	1/4	9/16-18	24	32	14	17	7/16-20	205511.3
		205512	10	3/8	3/4-16	29,5	37	19	22	9/16-18	205512.3
		205513	12	1/2	7/8-14	34	43	22	27	3/4-16	205513.3
		205514	12	1/2	11/16-12	36	49,5	27	32	3/4-16	205514.3
		205515	14-15-16	5/8	3/4-16	37	39,5	22	22	7/8-14	205515.3
		205516	14-15-16	5/8	11/16-12	39	49,5	27	32	7/8-14	205516.3
		205517	18-20	3/4	3/4-16	42	41,5	27	22	11/16-12	205517.3
		205518	18-20	3/4	7/8-14	42	47	27	27	11/16-12	205518.3
	290	205519	18-20	3/4	15/16-12	45	52	33	41	11/16-12	205519.3
		205520	25	1	11/16-12	46	49,5	33	32	15/16-12	205520.3
	240	205521	25	1	15/8-12	52	58	41	50	15/16-12	205521.3

Note: If you wish to order a fitting in stainless steel, please change the first two digit from **20..** to **21..**
Articles available on scheduled orders only

GAUGE COUPLING Thread BSP Parallel

Type: **2056..** O-ring Body

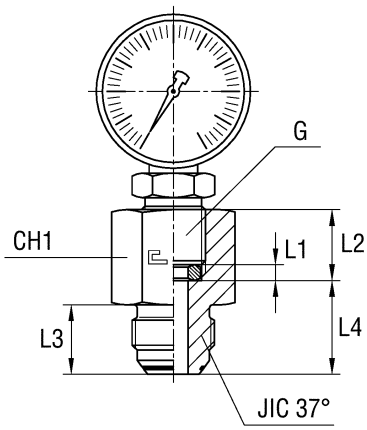

Type: **2056...3** Standard

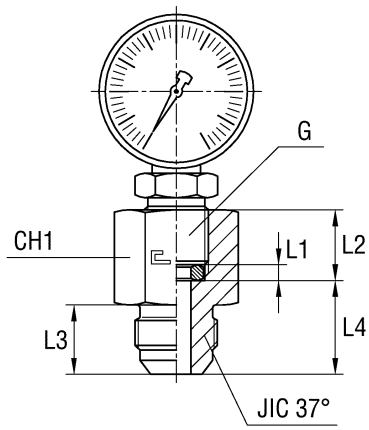

Serie	Bar	Ordering O-ring Body	Ø Tube M	Ø Tube W	G	L1	L2	L3	L4	CH1	JIC 37°	Ordering Standard Body
UNIVERSAL	350	205601	6	1/4	1/4	4,5	14,5	14	18,5	19	7/16-20	205601.3
		205602	8	5/16	1/4	4,5	14,5	14	18,5	19	1/2-20	205602.3
		205603	10	3/8	1/4	4,5	14,5	14,1	18,5	19	9/16-18	205603.3
		205604	12	1/2	1/4	4,5	14,5	16,7	21,5	22	3/4-16	205604.3
		205605	6	1/4	1/2	5	20	14	20	27	7/16-20	205605.3
		205606	8	5/16	1/2	5	20	14	20	27	1/2-20	205606.3
		205607	10	3/8	1/2	5	20	14,1	20	27	9/16-18	205607.3
		205608	12	1/2	1/2	5	20	16,7	23	27	3/4-16	205608.3

Note: If you wish to order a fitting in stainless steel, please change the first two digit from **20..** to **21..**
Gauge not included

GAUGE COUPLING Thread BSP Parallel

Type: **2057..**

FORM X

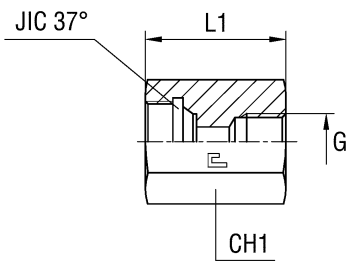

FORM Y

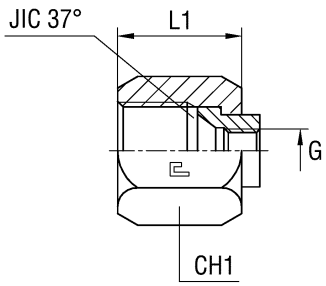

Serie	Bar	Ordering Body	Ø Tube M	Ø Tube W	G	FORMA	L1	CH1	JIC 37°
UNIVERSAL	350	205701	6	1/4	1/4	X	29	19	7/16-20
		205702	8	5/16	1/4	X	29	19	1/2-20
		205703	10	3/8	1/4	X	29	19	9/16-18
		205704	12	1/2	1/4	X	32	22	3/4-16
		205705	14-15-16	5/8	1/4	Y	24,6	27	7/8-14
		205706	18-20	3/4	1/4	Y	25,9	32	1 1/16-12
	290	205707	25	1	1/4	Y	28,4	41	1 5/16-12
	240	205708	30-32	1 1/4	1/4	Y	31	50	15/8-12
		205709	38	1 1/2	1/4	Y	35,8	60	17/8-12

Note: If you wish to order a fitting in stainless steel, please change the first two digit from **20..** to **21..**
Articles available on scheduled orders only

MALE STUD COUPLING WITH O-RING AND WASHER Thread BSP Parallel

Type: **2058..** With O-ring

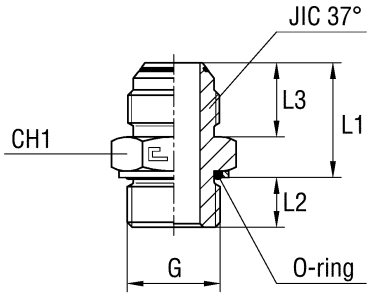

Type: **2058...3** Standard

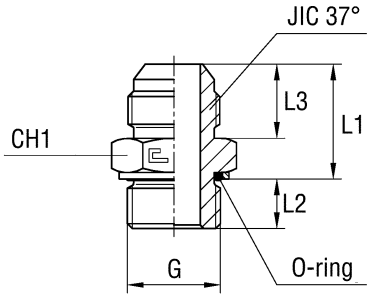

Serie	Bar	Ordering O-ring Body	Ø Tube M	Ø Tube W	G	L1	L2	L3	CH1	JIC 37°	Ordering Standard Body
UNIVERSAL	350	205801	6	1/4	1/8	22,3	6,7	14	14	7/16-20	205801.3
		205802	8	5/16	1/8	22,3	6,7	14	14	1/2-20	205802.3
		205803	10	3/8	1/4	22,8	10,2	14,1	19	9/16-18	205803.3
		205804	12	1/2	3/8	26,3	10,2	16,7	22	3/4-16	205804.3
	315	205805	14-15-16	5/8	1/2	31,3	12,2	19,3	27	7/8-14	205805.3
		205806	18-20	3/4	3/4	34,8	14,2	21,9	36	1 1/16-12	205806.3
	280	205807	25	1	1	37,6	15,4	23,1	41	1 5/16-12	205807.3
	240	205808	30-32	1 1/4	1 1/4	41,1	13,4	24,3	50	1 5/8-12	205808.3
		205809	38	1 1/2	1 1/2	45,1	19,4	27,5	55	1 7/8-12	205809.3
	350	205810	6	1/4	1/4	22,8	10,2	14	19	7/16-20	205810.3
		205811	6	1/4	3/8	23,8	10,2	14	22	7/16-20	205811.3
	315	205812	6	1/4	1/2	25,8	12,2	14	27	7/16-20	205812.3
	350	205813	8	5/16	1/4	22,8	10,2	14	19	1/2-20	205813.3
		205814	8	5/16	3/8	23,8	10,2	14	22	1/2-20	205814.3
		205815	10	3/8	1/8	22,3	6,7	14,1	17	9/16-18	205815.3
		205816	10	3/8	3/8	23,8	10,2	14,1	22	9/16-18	205816.3
	315	205817	10	3/8	1/2	26,3	12,2	14,1	27	9/16-18	205817.3
	350	205818	12	1/2	1/4	26,3	10,2	16,7	22	3/4-16	205818.3
	315	205819	12	1/2	1/2	28,8	12,2	16,7	27	3/4-16	205819.3
		205820	12	1/2	3/4	29,8	14,2	16,7	36	3/4-16	205820.3
	350	205821	14-15-16	5/8	3/8	30,3	10,2	19,3	24	7/8-14	205821.3
	315	205822	14-15-16	5/8	3/4	32,3	14,2	19,3	36	7/8-14	205822.3
	350	205823	18-20	3/4	3/8	33,8	10,2	21,9	30	1 1/16-12	205823.3
	315	205824	18-20	3/4	1/2	33,8	12,2	21,9	30	1 1/16-12	205824.3
	280	205825	18-20	3/4	1	36,6	15,4	21,9	41	1 1/16-12	205825.3
	290	205826	25	1	3/4	35,8	14,2	23,1	36	1 5/16-12	205826.3
	240	205827	25	1	1 1/4	39,6	17,4	23,1	50	1 5/16-12	205827.3
		205828	30-32	1 1/4	1	40,1	15,4	24,3	46	1 5/8-12	205828.3
		205829	30-32	1 1/4	1 1/2	42,1	19,4	24,3	55	1 5/8-12	205829.3
		205830	38	1 1/2	1 1/4	44,1	17,4	27,5	50	1 7/8-12	205830.3

Note: If you wish to order a fitting in stainless steel, please change the first two digit from **20..** to **21..**
Articles available on scheduled orders only

MALE STUD COUPLING WITH O-RING AND WASHER Thread Metric Parallel

Type: **2059..** With O-ring

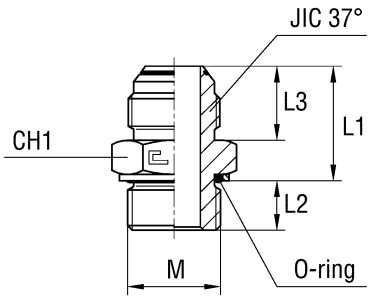

Type: **2059...3** Standard

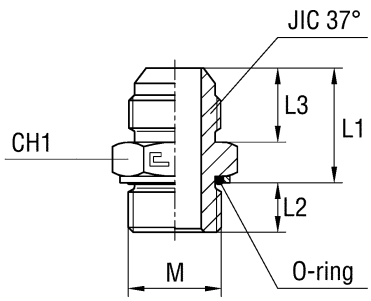

Serie	Bar	Ordering O-ring Body	Ø Tube M	Ø Tube W	M	L1	L2	L3	CH1	JIC 37°	Ordering Standard Body
UNIVERSAL	350	205901	6	1/4	10x1	22,5	7,5	14	14	7/16-20	205901.3
		205902	8	5/16	12x1,5	22,4	9,6	14	17	1/2-20	205902.3
		205903	10	3/8	14x1,5	22,4	9,6	14,1	19	9/16-18	205903.3
		205904	12	1/2	16x1,5	26,4	11,1	16,7	22	3/4-16	205904.3
	315	205905	14-15-16	5/8	22x1,5	30,9	13,6	19,3	27	7/8-14	205905.3
		205906	18-20	3/4	27x2	34,5	16,5	21,9	32	11/16-12	205906.3
	280	205907	25	1	33x2	36,5	16,5	23,1	41	15/16-12	205907.3
	240	205908	30-32	1 1/4	42x2	40,5	17	24,3	50	15/8-12	205908.3
		205909	38	1 1/2	48x2	44	19,5	27,5	55	17/8-12	205909.3
	350	205910	6	1/4	12x1,5	22,4	9,6	14	17	7/16-20	205910.3
		205911	8	5/16	10x1	22,5	7,5	14	14	1/2-20	205911.3
		205912	8	5/16	14x1,5	22,4	9,6	14	19	1/2-20	205912.3
		205913	10	3/8	16x1,5	23,9	11,1	14,1	22	9/16-18	205913.3
		205914	12	1/2	14x1,5	26,4	9,6	16,7	22	3/4-16	205914.3
		205915	12	1/2	18x1,5	26,9	12,6	16,7	24	3/4-16	205915.3
		205916	14-15-16	5/8	18x1,5	29,9	12,6	19,3	24	7/8-14	205916.3
	315	205917	14-15-16	5/8	20x1,5	29,9	12,6	19,3	27	7/8-14	205917.3
		205918	18-20	3/4	22x1,5	33,4	13,6	21,9	27	11/16-12	205918.3
	280	205919	25	1	27x2	35,5	16,5	23,1	36	15/16-12	205919.3

Note: If you wish to order a fitting in stainless steel, please change the first two digit from **20..** to **21..**
Articles available on request only

MALE STRAIGHT ADAPTER Thread BSP Taper

Type: **3001..**

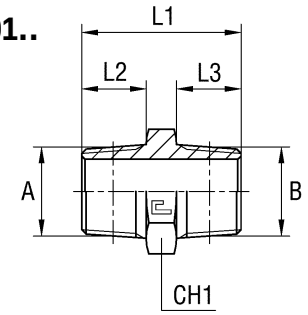

Serie	Bar	Ordering Body	A	B	L1	L2	L3	CH1
UNIVERSAL	350	300101	1/8	1/8	25	10	10	12
		300102	1/8	1/4	30,5	10	14,5	14
		300103	1/4	1/4	35	14,5	14,5	14
	250	300104	1/4	3/8	35	14,5	14,5	17
		300105	3/8	3/8	35	14,5	14,5	17
	225	300106	3/8	1/2	40,5	14,5	19	22
		300107	1/2	1/2	45	19	19	22
	200	300108	1/2	3/4	47	19	19	27
		300109	3/4	3/4	47	19	19	27
	160	300110	3/4	1	53	19	24	36
		300111	1	1	58	24	24	36
		300112	1 1/4	1 1/4	62	25	25	46
		300113	1 1/2	1 1/2	66	26	26	50
	100	300114	2	2	69	26	26	65
	250	300115	3/8	1/8	30,5	14,5	10	17
	225	300116	1/2	1/4	40,5	19	14,5	22
	200	300117	3/4	1/4	42,5	19	14,5	27
	160	300118	1 1/4	1	61	25	24	46

Note: If you wish to order a fitting in stainless steel, please change the first two digit from **30..** to **31..**

MALE STRAIGHT ADAPTER Thread NPT

Type: **3002..**

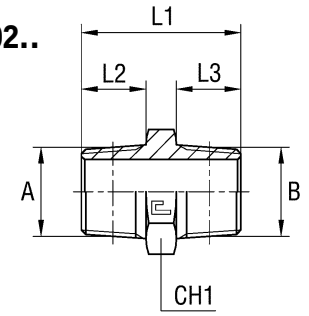

Serie	Bar	Ordering Body	A	B	L1	L2	L3	CH1
UNIVERSALE	350	300201	1/8	1/8	26	10	10	12
		300202	1/8	1/4	30,5	10	14,5	14
		300203	1/4	1/4	35	14,5	14,5	14
	250	300204	1/4	3/8	35	14,5	14,5	17
		300205	3/8	3/8	35	14,5	14,5	17
	225	300206	3/8	1/2	40,5	14,5	19	22
		300207	1/2	1/2	45	19	19	22
	200	300208	1/2	3/4	47	19	19	27
		300209	3/4	3/4	47	19	19	27
	160	300210	3/4	1	53	19	24	36
		300211	1	1	58	24	24	36
		300212	1 1/4	1 1/4	62	25	25	46
		300213	1 1/2	1 1/2	66	26	26	50
	100	300214	2	2	69	26	26	65
	250	300215	3/8	1/8	30,5	14,5	10	17
	225	300216	1/2	1/4	40,5	19	14,5	22
	200	300217	3/4	1/4	42,5	19	14,5	27
	160	300218	1 1/4	1	61	25	24	46

Note: If you wish to order a fitting in stainless steel, please change the first two digit from **30..** to **31..**

MALE STUD STRAIGHT ADAPTER Thread BSP Parallel / BSP Taper

Type: **3003..**

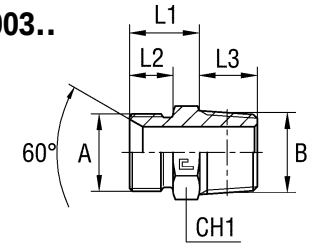

Serie	Bar	Ordering Body	A	B	L1	L2	L3	CH1
UNIVERSALE	350	300301	1/8	1/8	13	8	10	12
		300302	1/8	1/4	14	8	14,5	14
		300303	1/4	1/4	17	11	14,5	14
	250	300304	1/4	3/8	17	11	14,5	17
		300305	3/8	3/8	18	12	14,5	17
	225	300306	3/8	1/2	19	12	19	22
		300307	1/2	1/2	21	14	19	22
	200	300308	1/2	3/4	23	14	19	27
		300309	3/4	3/4	25	16	19	27
	160	300310	3/4	1	26	16	24	36
		300311	1	1	29	19	24	36
		300312	1	1 1/4	31	19	25	46
		300313	1 1/4	1 1/4	32	20	25	46
		300314	1 1/4	1 1/2	34	20	26	50
		300315	1 1/2	1 1/2	37	23	26	50
	100	300316	2	2	42	25	26	65
	350	300317	1/4	1/8	17	11	10	14
	250	300318	3/8	1/4	18	12	14,5	17
	225	300319	1/2	3/8	21	14	14,5	22
	200	300320	3/4	1/2	25	16	19	27
	160	300321	1	3/4	29	19	19	36

Note: If you wish to order a fitting in stainless steel, please change the first two digit from **30..** to **31..**

MALE STUD STRAIGHT ADAPTER Thread BSP Parallel / NPT

Type: **3004..**

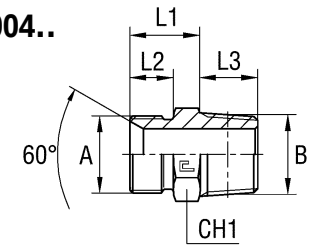

Serie	Bar	Ordering Body	A	B	L1	L2	L3	CH1
UNIVERSALE	350	300401	1/8	1/8	13	8	10	12
		300402	1/8	1/4	14	8	14,5	14
		300403	1/4	1/4	17	11	14,5	14
	250	300404	1/4	3/8	17	11	14,5	17
		300405	3/8	3/8	18	12	14,5	17
	225	300406	3/8	1/2	19	12	19	22
		300407	1/2	1/2	21	14	19	22
	200	300408	1/2	3/4	23	14	19	27
		300409	3/4	3/4	25	16	19	27
	160	300410	3/4	1	26	16	24	36
		300411	1	1	29	19	24	36
		300412	1	1 1/4	31	19	25	46
		300413	1 1/4	1 1/4	32	20	25	46
		300414	1 1/4	1 1/2	34	20	26	50
		300415	1 1/2	1 1/2	37	23	26	50
	100	300416	2	2	42	25	26	65
	350	300417	1/4	1/8	17	11	10	14
	250	300418	3/8	1/4	18	12	14,5	17
	225	300419	1/2	3/8	21	14	14,5	22
	200	300420	3/4	1/2	25	16	19	27
	160	300421	1	3/4	29	19	19	36

Note: If you wish to order a fitting in stainless steel, please change the first two digit from **30..** to **31..**

MALE STRAIGHT ADAPTER Thread BSP Parallel

Type: **3005..**

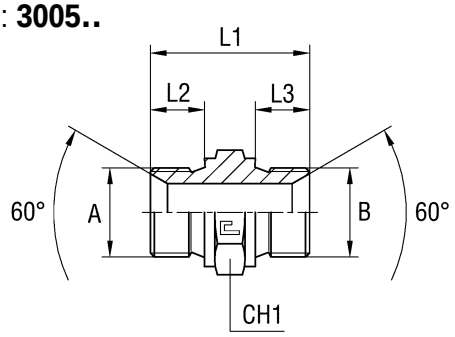

Serie	Bar	Ordering Body	A	B	L1	L2	L3	CH1
UNIVERSAL	400	300501	1/8	1/8	24	8	8	14
		300502	1/8	1/4	28,5	8	11	19
		300503	1/8	3/8	30	8	12	22
		300504	1/4	1/4	32	11	11	19
		300505	1/4	3/8	33,5	11	12	22
	350	300506	1/4	1/2	37	11	14	27
	315	300507	1/4	3/4	41	11	16	32
	400	300508	3/8	3/8	35	12	12	22
	350	300509	3/8	1/2	38,5	12	14	27
	315	300510	3/8	3/4	42,5	12	16	32
	350	300511	1/2	1/2	41	14	14	27
		300512	1/2	5/8	43	14	16	30
	315	300513	1/2	3/4	45	14	16	32
	250	300514	1/2	1	49	14	19	41
	200	300515	1/2	1 1/4	52	14	20	50
	350	300516	5/8	5/8	45	16	16	30
	315	300517	5/8	3/4	47	16	16	32
		300518	3/4	3/4	47	16	16	32
	250	300519	3/4	1	51	16	19	41
	200	300520	3/4	1 1/4	54	16	20	50
	160	300521	3/4	1 1/2	59	16	23	55
	250	300522	1	1	54	19	19	41
	200	300523	1	1 1/4	57	19	20	50
	100	300524	1	1 1/2	62	19	23	55
	125	300525	1	2	67,5	19	25	70
	200	300526	1 1/4	1 1/4	58	20	20	50
	160	300527	1 1/4	1 1/2	63	20	23	55
	125	300528	1 1/4	2	68,5	20	25	70
	160	300529	1 1/2	1 1/2	66	23	23	55
	125	300530	1 1/2	2	71,5	23	25	70
		300531	2	2	74	25	25	70
	350	300532	1/8	1/2	33,5	8	14	27
		300533	1/4	5/8	39	11	16	30
	250	300534	1/4	1	45	11	19	41
	350	300535	3/8	5/8	40,5	12	16	30
	250	300536	3/8	1	46,5	12	19	41
	160	300537	1/2	1 1/2	57	14	23	55
	250	300538	5/8	1	51	16	19	41
	200	300539	5/8	1 1/4	54	16	20	50

Note: If you wish to order a fitting in stainless steel, please change the first two digit from **30..** to **31..**
For copper washer sealing systems refer to items **3001..** pressure rates

MALE STRAIGHT ADAPTER Thread Metric Parallel

Type: **3006..**

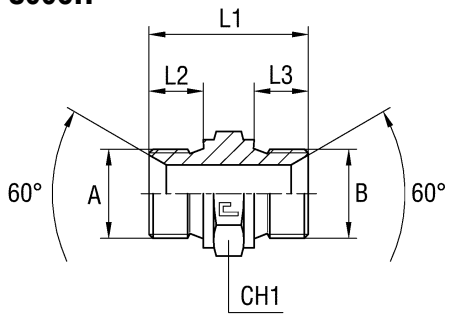

Serie	Bar	Ordering Body	A	B	L1	L2	L3	CH1
UNIVERSAL	400	300601	10x1	10x1	24	8	8	14
		300602	12x1,5	12x1,5	34	12	12	17
		300603	12x1,5	14x1,5	34	12	12	19
		300604	14x1,5	14x1,5	34	12	12	19
		300605	14x1,5	16x1,5	34	12	12	22
		300606	14x1,5	18x1,5	35,5	12	12	24
	350	300607	14x1,5	22x1,5	38	12	14	27
	400	300608	16x1,5	16x1,5	34	12	12	22
		300609	16x1,5	18x1,5	35,5	12	12	24
	350	300610	16x1,5	20x1,5	37,5	12	14	27
		300611	16x1,5	22x1,5	38	12	14	27
	400	300612	18x1,5	18x1,5	36	12	12	24
	350	300613	18x1,5	20x1,5	38	12	14	27
		300614	20x1,5	20x1,5	40,5	14	14	27
		300615	20x1,5	22x1,5	41	14	14	27
		300616	22x1,5	22x1,5	41	14	14	27
	315	300617	22x1,5	26x1,5	45	14	16	32
		300618	26x1,5	26x1,5	47	16	16	32
	250	300619	26x1,5	30x1,5	48	16	16	36
		300620	30x1,5	30x1,5	48	16	16	36
	200	300621	30x1,5	38x1,5	50	16	16	46
		300622	38x1,5	38x1,5	50	16	16	46
	160	300623	38x1,5	45x1,5	52	16	16	55
		300624	45x1,5	45x1,5	52	16	16	55

Note: If you wish to order a fitting in stainless steel, please change the first two digit from **30..** to **31..**
Articles available on scheduled orders only
For copper washer sealing systems refer to items **3001..** pressure rates

MALE STRAIGHT ADAPTER Thread BSP Parallel / Metric Parallel

Type: **3007..**

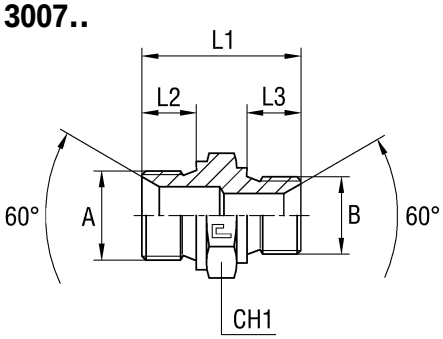

Serie	Bar	Ordering Body	A	B	L1	L2	L3	CH1
UNIVERSAL	400	300701	1/8	10x1	24	8	8	14
		300702	1/8	14x1,5	29,5	8	12	19
		300703	1/4	10x1	28,5	11	8	19
		300704	1/4	12x1,5	33	11	12	19
		300705	1/4	14x1,5	33	11	12	19
		300706	3/8	10x1	30	12	8	22
		300707	3/8	12x1,5	34,5	12	12	22
		300708	3/8	14x1,5	34,5	12	12	22
		300709	3/8	16x1,5	34,5	12	12	22
		300710	3/8	18x1,5	36	12	12	24
	350	300711	3/8	22x1,5	38,5	12	14	27
		300712	1/2	14x1,5	38	14	12	27
		300713	1/2	16x1,5	38	14	12	27
		300714	1/2	18x1,5	38,5	14	12	27
		300715	1/2	20x1,5	40,5	14	14	27
		300716	1/2	22x1,5	41	14	14	27
		300717	5/8	18x1,5	40,5	16	12	30
		300718	5/8	20x1,5	42,5	16	14	30
		300719	5/8	22x1,5	43	16	14	30
	315	300720	3/4	18x1,5	42,5	16	12	32
		300721	3/4	20x1,5	44,5	16	14	32
		300722	3/4	22x1,5	45	16	14	32
		300723	3/4	26x1,5	47	16	16	32
	250	300724	3/4	30x1,5	48	16	16	36
		300725	1	26x1,5	51	19	16	41
		300726	1	30x1,5	51	19	16	41
	200	300727	1	38x1,5	53	19	16	46
		300728	1 1/4	30x1,5	54	20	16	50
		300729	1 1/4	38x1,5	54	20	16	50
	160	300730	1 1/2	38x1,5	59	23	16	55
		300731	1 1/2	45x1,5	59	23	16	55
	125	300732	2	45x1,5	64,5	25	16	70

Note: If you wish to order a fitting in stainless steel, please change the first two digit from **30..** to **31..**
Articles available on scheduled orders only
For copper washer sealing systems refer to items **3001..** pressure rates

MALE FEMALE STRAIGHT ADAPTER Thread BSP Parallel

Type: **3008..**

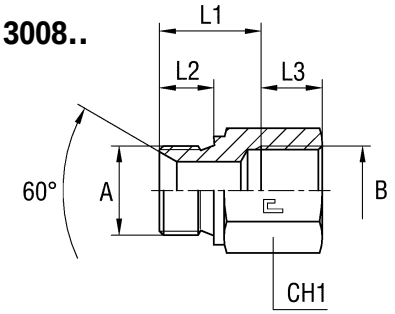

Serie	Bar	Ordering Body	A	B	L1	L2	L3	CH1
UNIVERSAL	350	300801	1/8	1/8	18	8	10	14
		300802	1/8	1/8	28	8	10	14
		300803	1/8	1/8	38	8	10	14
		300804	1/4	1/4	18	11	14	19
		300805	1/4	1/4	27	11	14	19
		300806	1/4	1/4	40	11	14	19
		300807	1/4	1/4	45	11	14	19
		300808	3/8	3/8	18	12	14	22
		300809	3/8	3/8	31	12	14	22
		300810	3/8	3/8	36	12	14	22
		300811	3/8	3/8	43	12	14	22
		300812	1/2	1/2	20	14	17	27
		300813	1/2	1/2	23	14	17	27
		300814	1/2	1/2	33	14	17	27
		300815	1/2	1/2	43	14	17	27
		300816	1/2	1/2	63	14	17	27
	315	300817	3/4	3/4	29	16	19	36
		300818	3/4	3/4	37	16	19	36
		300819	3/4	3/4	54	16	19	36
	250	300820	1	1	32,5	19	21,5	41
		300821	1	1	62,5	19	21,5	41

Note: If you wish to order a fitting in stainless steel, please change the first two digit from **30..** to **31..**
For copper washer sealing systems refer to items **3001..** pressure rates

MALE FEMALE STRAIGHT ADAPTER Thread Metric Parallel

Type: **3009..**

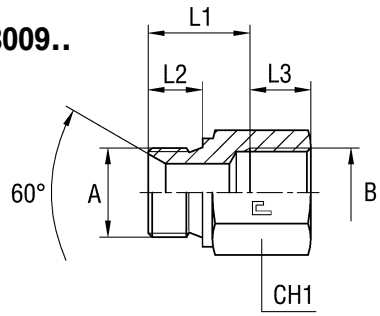

Serie	Bar	Ordering Body	A	B	L1	L2	L3	CH1
UNIVERSAL	350	300901	10x1	10x1	18	8	10	14
		300902	10x1	10x1	28	8	10	14
		300903	12x1,5	12x1,5	15,5	12	14,5	17
		300904	12x1,5	12x1,5	25,5	12	14,5	17
		300905	14x1,5	14x1,5	18,5	12	14,5	19
		300906	14x1,5	14x1,5	28,5	12	14,5	19
		300907	16x1,5	16x1,5	20,5	12	14,5	22
		300908	16x1,5	16x1,5	30,5	12	14,5	22
		300909	18x1,5	18x1,5	20,5	12	14,5	24
		300910	18x1,5	18x1,5	35,5	12	14,5	24
		300911	20x1,5	20x1,5	20,5	14	16,5	27
		300912	20x1,5	20x1,5	33,5	14	16,5	27
		300913	22x1,5	22x1,5	23,5	14	16,5	27
		300914	22x1,5	22x1,5	33,5	14	16,5	27
	315	300915	26x1,5	26x1,5	26,5	16	18,5	32
		300916	26x1,5	26x1,5	41,5	16	18,5	32
	250	300917	30x1,5	30x1,5	36	16	19	36
		300918	30x1,5	30x1,5	66	16	19	36

Note: If you wish to order a fitting in stainless steel, please change the first two digit from **30..** to **31..**
Articles available on request only
For copper washer sealing systems refer to items **3001..** pressure rates

PLUG WITH EXAGON SOCKET HEAD thread BSP taper

Type: **3010..**

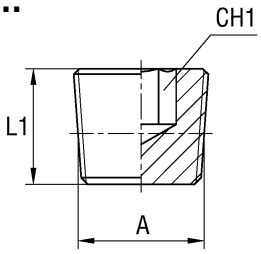

Serie	Bar	Ordering Body	A	L1	CH1
UNIVERSAL	350	301001	1/8	8	5
		301002	1/4	10	7
	250	301003	3/8	10	8
	225	301004	1/2	10	10
	200	301005	3/4	12	12
	160	301006	1	12	17
		301007	1 1/4	18	22
		301008	1 1/2	20	24

Note: If you wish to order a fitting in stainless steel, please change the first two digit from **30..** to **31..**

PLUG WITH EXAGON SOCKET HEAD Thread NPT

Type: **3011..**

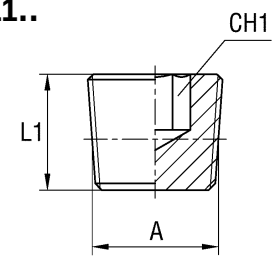

Serie	Bar	Ordering Body	A	L1	CH1
UNIVERSAL	350	301101	1/8	7,4	4,78
		301102	1/4	11,3	6,35
	250	301103	3/8	11,3	7,95
	225	301104	1/2	15	9,52
	200	301105	3/4	15,3	14,3
	160	301106	1	19	15,88
		301107	1 1/4	20,3	19,05
		301108	1 1/2	21	25,4

Note: If you wish to order a fitting in stainless steel, please change the first two digit from **30..** to **31..**

FEMALE STRAIGHT ADAPTER Thread BSP Parallel

Type: **3012..**

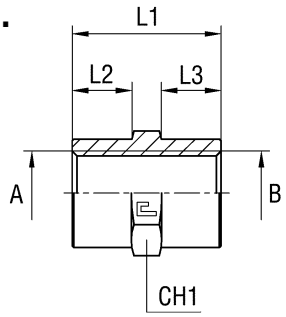

Serie	Bar	Ordering Body	A	B	L1	L2	L3	CH1
UNIVERSAL	350	301201	1/8	1/8	20	7	7	14
		301202	1/4	1/4	30	12	12	19
	250	301203	3/8	3/8	30	12	12	24
	225	301204	1/2	1/2	38	15	15	27
	200	301205	3/4	3/4	40	15	15	36
	160	301206	1	1	48	19	19	41
		301207	1 1/4	1 1/4	50	19	19	55
		301208	1 1/2	1 1/2	50	18	18	60
	350	301209	1/8	1/4	25	7	12	19
	250	301210	1/8	3/8	25	7	12	24
		301211	1/4	3/8	30	12	12	24
	225	301212	1/4	1/2	35	12	15	27
	200	301213	1/4	3/4	37	12	15	36
	225	301214	3/8	1/2	35	12	15	27
	200	301215	1/2	3/4	40	15	15	36

Note: If you wish to order a fitting in stainless steel, please change the first two digit from **30..** to **31..**

FEMALE STRAIGHT ADAPTER Thread Metric Parallel

Type: **3013..**

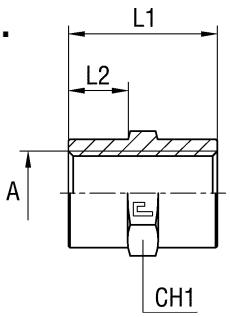

Serie	Bar	Ordering Body	A	L1	L2	CH1
UNIVERSAL	350	301301	10x1	20	7	14
		301302	14x1,5	30	12	19
	250	301303	16x1,5	30	12	24
	225	301304	22x1,5	38	15	27
	200	301305	27x2	40	15	36
	160	301306	33x2	48	19	41
		301307	42x2	50	19	55
		301308	48x2	50	18	60

Note: If you wish to order a fitting in stainless steel, please change the first two digit from **30..** to **31..**
Articles available on scheduled orders only

FEMALE STRAIGHT ADAPTER Thread BSP Taper

Type: **3014..**

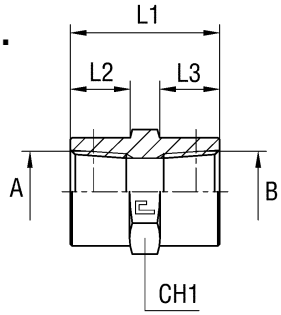

Serie	Bar	Ordering Body	A	B	L1	L2	L3	CH1
UNIVERSAL	350	301401	1/8	1/8	20	7	7	14
		301402	1/4	1/4	30	12	12	19
	250	301403	3/8	3/8	30	12	12	24
	225	301404	1/2	1/2	38	15	15	27
	200	301405	3/4	3/4	40	15	15	36
	160	301406	1	1	48	19	19	41
		301407	1 1/4	1 1/4	60	24	24	50
		301408	1 1/2	1 1/2	60	23	23	60
	350	301409	1/8	1/4	25	7	12	19
	250	301410	1/8	3/8	25	7	12	24
		301411	1/4	3/8	30	12	12	24
	225	301412	1/4	1/2	35	12	15	27
	200	301413	1/4	3/4	37	12	15	36
	225	301414	3/8	1/2	35	12	15	27
	200	301415	1/2	3/4	40	15	15	36

Note: If you wish to order a fitting in stainless steel, please change the first two digit from **30..** to **31..**
Articles available on scheduled orders only

FEMALE STRAIGHT ADAPTER Thread NPT

Type: **3015..**

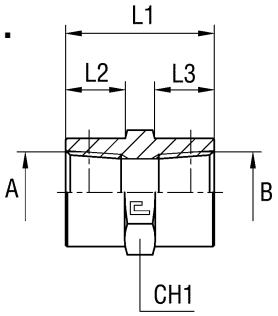

Serie	Bar	Ordering Body	A	B	L1	L2	L3	CH1
UNIVERSAL	350	301501	1/8	1/8	20	7	7	14
		301502	1/4	1/4	30	12	12	19
	250	301503	3/8	3/8	30	12	12	24
	225	301504	1/2	1/2	38	15	15	27
	200	301505	3/4	3/4	40	15	15	36
	160	301506	1	1	48	19	19	41
		301507	1 1/4	1 1/4	60	24	24	50
		301508	1 1/2	1 1/2	60	23	23	60
	350	301509	1/8	1/4	25	7	12	19
	250	301510	1/8	3/8	25	7	12	24
		301511	1/4	3/8	30	12	12	24
	225	301512	1/4	1/2	35	12	15	27
	200	301513	1/4	3/4	37	12	15	36
	225	301514	3/8	1/2	35	12	15	27
	200	301515	1/2	3/4	40	15	15	36

Note: If you wish to order a fitting in stainless steel, please change the first two digit from **30..** to **31..**
Articles available on scheduled orders only

STRAIGHT ADAPTER WITH SWIVEL NUT Thread BSP Parallel

Type: **3016..**

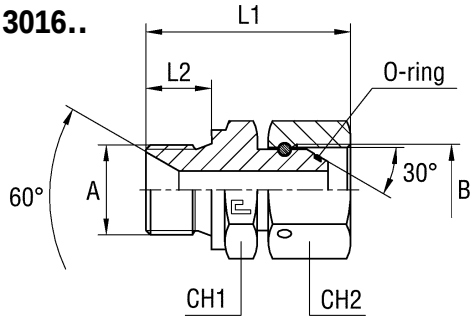

Serie	Bar	Ordering Body	A	B	L1	L2	CH1	CH2
UNIVERSAL	400	301601	1/8	1/8	28	8	14	14
		301602	1/4	1/4	36	11	19	19
		301603	3/8	3/8	39	12	22	22
	350	301604	1/2	1/2	45	14	27	27
		301605	5/8	5/8	51	16	30	30
	315	301606	3/4	3/4	53	16	32	32
	250	301607	1	1	63,5	19	41	41
	200	301608	1 1/4	1 1/4	67	20	50	50
	160	301609	1 1/2	1 1/2	77,5	23	55	55
	125	301610	2	2	87	25	70	70
	400	301611	1/4	3/8	37	11	19	22
		301612	3/8	1/4	38	12	22	19
	350	301613	3/8	1/2	42	12	22	27
		301614	1/2	1/4	41	14	27	19
		301615	1/2	3/8	42	14	27	22
	315	301616	1/2	3/4	49	14	27	32
		301617	3/4	1/2	49	16	32	27
	250	301618	1	3/4	57	19	41	32

Note: If you wish to order a fitting in stainless steel, please change the first two digit from **30..** to **31..**
For copper washer sealing systems refer to items **3001..** pressure rates

STRAIGHT ADAPTER WITH SWIVEL NUT Thread Metric Parallel

Type: **3017..**

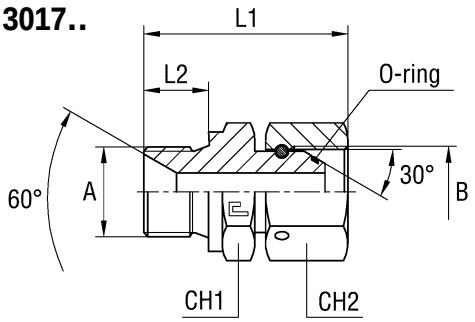

Serie	Bar	Ordering Body	A	B	L1	L2	CH1	CH2
UNIVERSAL	400	301701	12x1,5	12x1,5	35	12	17	17
		301702	14x1,5	14x1,5	37	12	19	19
		301703	16x1,5	16x1,5	38	12	22	22
		301704	18x1,5	18x1,5	41	12	24	24
	350	301705	20x1,5	20x1,5	46	14	27	27
		301706	22x1,5	22x1,5	47	14	27	27
	315	301707	26x1,5	26x1,5	53,5	16	32	32
	250	301708	30x1,5	30x1,5	56,5	16	36	36

Note: If you wish to order a fitting in stainless steel, please change the first two digit from **30..** to **31..**
Articles available on request only
For copper washer sealing systems refer to items **3001..** pressure rates

STRAIGHT ADAPTER WITH DOUBLE SWIVEL NUT Thread BSP Parallel

Type: **3018..**

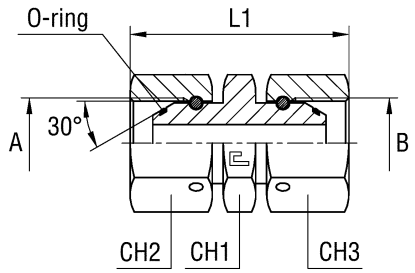

Serie	Bar	Ordering Body	A	B	L1	CH1	CH2	CH3
UNIVERSAL	400	301801	1/8	1/8	31,5	14	14	14
		301802	1/4	1/4	40,5	19	19	19
		301803	3/8	3/8	42,5	22	22	22
	350	301804	1/2	1/2	49,5	27	27	27
		301805	5/8	5/8	55	30	30	30
	315	301806	3/4	3/4	59	32	32	32
	250	301807	1	1	73	41	41	41
	200	301808	1 1/4	1 1/4	76	50	50	50
	160	301809	1 1/2	1 1/2	89	55	55	55
	125	301810	2	2	99	70	70	70
	400	301811	1/4	3/8	41,5	22	19	22
	350	301812	1/4	1/2	45,5	27	19	27
		301813	3/8	1/2	46	27	22	27
	315	301814	1/2	3/4	55	32	27	32

Note: If you wish to order a fitting in stainless steel, please change the first two digit from **30..** to **31..**

STRAIGHT ADAPTER WITH DOUBLE SWIVEL NUT Thread Metric Parallel

Type: **3019..**

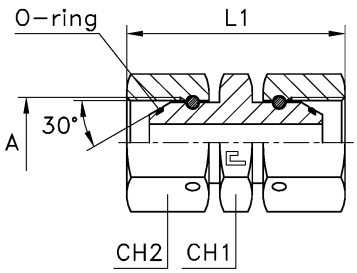

Serie	Bar	Ordering Body	A	L1	CH1	CH2
UNIVERSAL	400	301901	12x1,5	36	17	17
		301902	14x1,5	40,5	19	19
		301903	16x1,5	42	22	22
		301904	18x1,5	45	24	24
	350	301905	20x1,5	51,5	27	27
		301906	22x1,5	53	27	27
	315	301907	26x1,5	59,5	32	32
	250	301908	30x1,5	64	36	36

Note: If you wish to order a fitting in stainless steel, please change the first two digit from **30..** to **31..**
Articles available on request only

MALE 90° ADAPTER Thread BSP Taper

Type: **3020..**

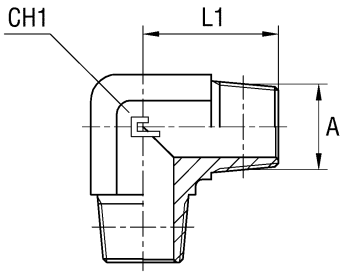

Serie	Bar	Ordering Body	A	L1	CH1
UNIVERSAL	350	302001	1/8	20	11
		302002	1/4	28	14
	250	302003	3/8	31	19
	225	302004	1/2	37,5	22
	200	302005	3/4	40	27
	160	302006	1	50	33
		302007	1 1/4	60	41
		302008	1 1/2	67	48
	100	302009	2	76	65

Note: If you wish to order a fitting in stainless steel, please change the first two digit from **30..** to **31..**

MALE 90° ADAPTER Thread NPT

Type: **3021..**

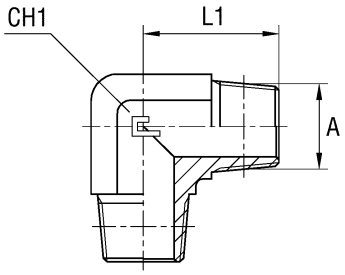

Serie	Bar	Ordering Body	A	L1	CH1
UNIVERSAL	350	302101	1/8	20	11
		302102	1/4	28	14
	250	302103	3/8	31	19
	225	302104	1/2	37,5	22
	200	302105	3/4	40	27
	160	302106	1	50	33
		302107	1 1/4	60	41
		302108	1 1/2	67	48
	100	302109	2	76	65

Note: If you wish to order a fitting in stainless steel, please change the first two digit from **30..** to **31..**
Articles available on request only

MALE STUD 90° ADAPTER Thread BSP Parallel / BSP Taper

Type: **3022..**

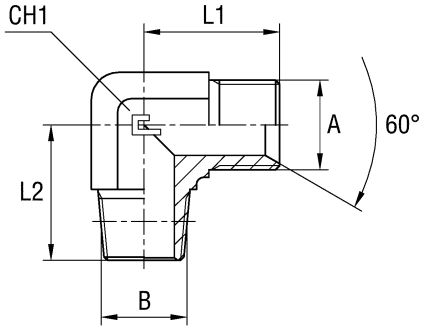

Serie	Bar	Ordering Body	A	B	L1	L2	CH1
UNIVERSAL	350	302201	1/8	1/8	21	20	11
		302202	1/4	1/4	26	28	14
	250	302203	3/8	3/8	29	31	19
	225	302204	1/2	1/2	34	37,5	22
	200	302205	5/8	1/2	38	40	27
		302206	3/4	3/4	41	40	27
	160	302207	1	1	45	50	33
		302208	1 1/4	1 1/4	52	60	41
		302209	1 1/2	1 1/2	59	67	48
	100	302210	2	2	78	76	65

Note: If you wish to order a fitting in stainless steel, please change the first two digit from **30..** to **31..**

MALE STUD 90° ADAPTER Thread BSP Parallel / NPT

Type: **3023..**

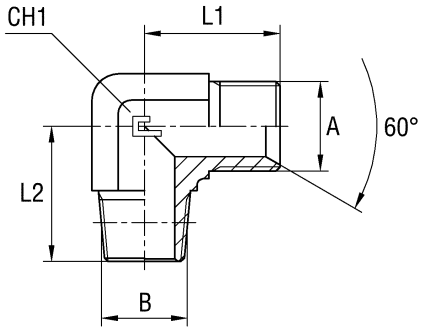

Serie	Bar	Ordering Body	A	B	L1	L2	CH1
UNIVERSAL	350	302301	1/8	1/8	21	20	11
		302302	1/4	1/4	26	28	14
	250	302303	3/8	3/8	29	31	19
	225	302304	1/2	1/2	34	37,5	22
	200	302305	5/8	1/2	38	40	27
		302306	3/4	3/4	41	40	27
	160	302307	1	1	45	50	33
		302308	1 1/4	1 1/4	52	60	41
		302309	1 1/2	1 1/2	59	67	48
	100	302310	2	2	78	76	65

Note: If you wish to order a fitting in stainless steel, please change the first two digit from **30..** to **31..**
Articles available on request only

MALE 90° UNION ELBOW ADAPTER Thread BSP Parallel

Type: **3024..**

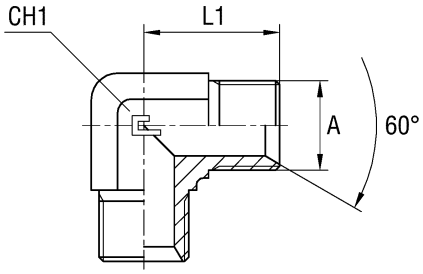

Serie	Bar	Ordering Body	A	L1	CH1
UNIVERSAL	400	302401	1/8	21	11
		302402	1/4	26	14
		302403	3/8	29	19
	350	302404	1/2	34	22
		302405	5/8	38	27
	315	302406	3/4	41	27
	250	302407	1	45	33
	200	302408	1 1/4	52	41
	160	302409	1 1/2	59	48
	125	302410	2	78	65

Note: If you wish to order a fitting in stainless steel, please change the first two digit from **30..** to **31..**

MALE 90° UNION ELBOW ADAPTER Thread Metric Parallel

Type: **3025..**

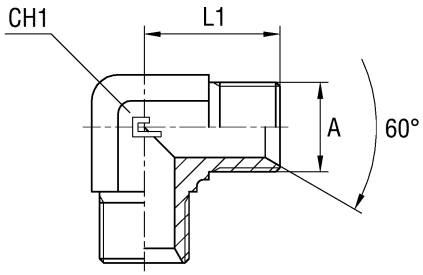

Serie	Bar	Ordering Body	A	L1	CH1
UNIVERSAL	400	302501	10x1	21	11
		302502	12x1,5	21	11
		302503	14x1,5	26	14
		302504	16x1,5	29	19
		302505	18x1,5	29	19
	350	302506	20x1,5	34	22
		302507	22x1,5	34	22
	315	302508	26x1,5	41	27
	250	302509	30x1,5	45	33

Note: If you wish to order a fitting in stainless steel, please change the first two digit from **30..** to **31..**
Articles available on request only

MALE STUD 45° ADAPTER Thread BSP Parallel / BSP taper

Type: **3026..**

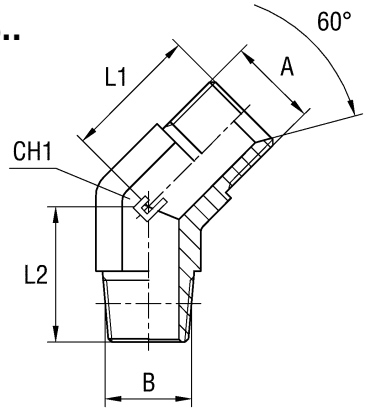

Serie	Bar	Ordering Body	A	B	L1	L2	CH1
UNIVERSAL	350	302601	1/8	1/8	20,5	16,5	11
		302602	1/4	1/4	21	22	14
	250	302603	3/8	3/8	23,5	24	19
	225	302604	1/2	1/2	26	29,5	22
	200	302605	5/8	1/2	29	30,5	27
		302606	3/4	3/4	32	30,5	27
	160	302607	1	1	37	38	33
		302608	1 1/4	1 1/4	39	42	41
		302609	1 1/2	1 1/2	46	45	48
	100	302610	2	2	57	54	65

Note: If you wish to order a fitting in stainless steel, please change the first two digit from **30..** to **31..**
Articles available on scheduled orders only

MALE STUD 45° ADAPTER Thread BSP Parallel/NPT

Type: **3027..**

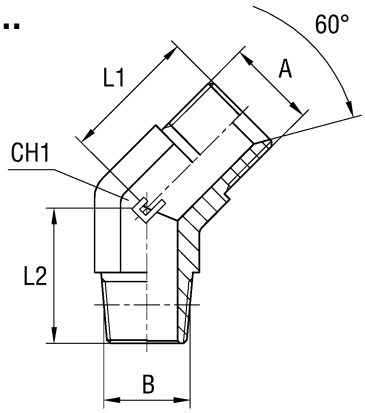

Serie	Bar	Ordering Body	A	B	L1	L2	CH1
UNIVERSAL	350	302701	1/8	1/8	20,5	16,5	11
		302702	1/4	1/4	21	22	14
	250	302703	3/8	3/8	23,5	24	19
	225	302704	1/2	1/2	26	29,5	22
	200	302705	5/8	1/2	29	30,5	27
		302706	3/4	3/4	32	30,5	27
	160	302707	1	1	37	38	33
		302708	1 1/4	1 1/4	39	42	41
		302709	1 1/2	1 1/2	46	45	48
	100	302710	2	2	57	54	65

Note: If you wish to order a fitting in stainless steel, please change the first two digit from **30..** to **31..**
Articles available on request only

MALE 45° UNION ELBOW ADAPTER Thread BSP Parallel

Type: **3028..**

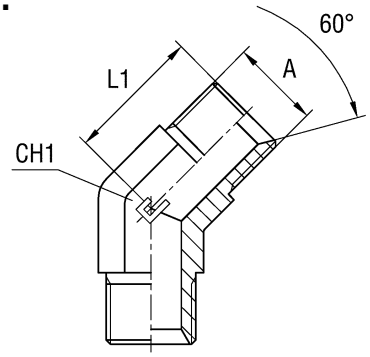

Serie	Bar	Ordering Body	A	L1	CH1
UNIVERSAL	400	302801	1/8	20,5	11
		302802	1/4	21	14
		302803	3/8	23,5	19
	350	302804	1/2	26	22
		302805	5/8	29	27
	315	302806	3/4	32	27
	250	302807	1	37	33
	200	302808	1 1/4	39	41
	160	302809	1 1/2	46	48
	125	302810	2	57	65

Note: If you wish to order a fitting in stainless steel, please change the first two digit from **30..** to **31..**
Articles available on scheduled orders only

MALE 45° UNION ELBOW ADAPTER Thread Metric Parallel

Type: **3029..**

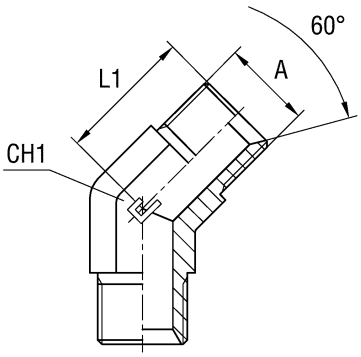

Serie	Bar	Ordering Body	A	L1	CH1
UNIVERSAL	400	302901	12x1,5	18	11
		302902	14x1,5	21	14
		302903	16x1,5	25	19
		302904	18x1,5	28	19
	350	302905	20x1,5	30	22
		302906	22x1,5	30	22
	315	302907	26x1,5	33	27
	250	302908	30x1,5	37	33

Note: If you wish to order a fitting in stainless steel, please change the first two digit from **30..** to **31..**
Articles available on request only

MALE STUD BARREL TEE ADAPTER Thread BSP Parallel / BSP taper

Type: **3030..**

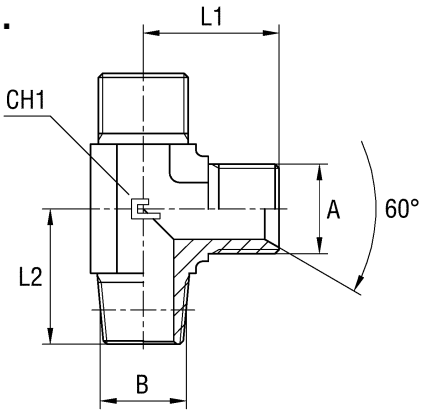

Serie	Bar	Ordering Body	A	B	L1	L2	CH1
UNIVERSAL	350	303001	1/8	1/8	21	20	11
		303002	1/4	1/4	26	28	14
	250	303003	3/8	3/8	29	31	19
	225	303004	1/2	1/2	34	37,5	22
	200	303005	5/8	1/2	38	40	27
		303006	3/4	3/4	41	40	27
	160	303007	1	1	45	50	33
		303008	1 1/4	1 1/4	52	60	41
		303009	1 1/2	1 1/2	59	67	48
	100	303010	2	2	78	76	65

Note: If you wish to order a fitting in stainless steel, please change the first two digit from **30..** to **31..**
Articles available on request only

MALE STUD BARREL TEE ADAPTER Thread BSP Parallel / NPT

Type: **3031..**

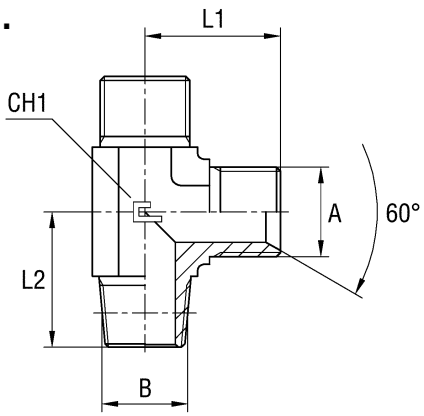

Serie	Bar	Ordering Body	A	B	L1	L2	CH1
UNIVERSAL	350	303101	1/8	1/8	21	20	11
		303102	1/4	1/4	26	28	14
	250	303103	3/8	3/8	29	31	19
	225	303104	1/2	1/2	34	37,5	22
	200	303105	5/8	1/2	38	40	27
		303106	3/4	3/4	41	40	27
	160	303107	1	1	45	50	33
		303108	1 1/4	1 1/4	52	60	41
		303109	1 1/2	1 1/2	59	67	48
	100	303110	2	2	78	76	65

Note: If you wish to order a fitting in stainless steel, please change the first two digit from **30..** to **31..**
Articles available on request only

MALE STUD BRANCH TEE ADAPTER Thread BSP Parallel / BSP taper

Type: **3032..**

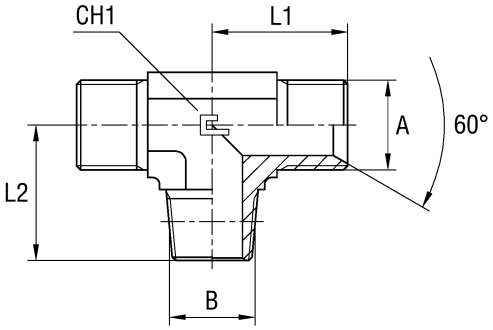

Serie	Bar	Ordering Body	A	B	L1	L2	CH1
UNIVERSAL	350	303201	1/8	1/8	21	20	11
		303202	1/4	1/4	26	28	14
	250	303203	3/8	3/8	29	31	19
	225	303204	1/2	1/2	34	37,5	22
	200	303205	5/8	1/2	38	40	27
		303206	3/4	3/4	41	40	27
	160	303207	1	1	45	50	33
		303208	1 1/4	1 1/4	52	60	41
		303209	1 1/2	1 1/2	59	67	48
	100	303210	2	2	78	76	65

Note: If you wish to order a fitting in stainless steel, please change the first two digit from **30..** to **31..**
Articles available on request only

MALE STUD BRANCH TEE ADAPTER Thread BSP Parallel / NPT

Type: **3033..**

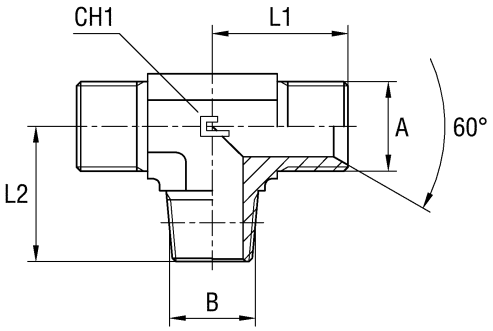

Serie	Bar	Ordering Body	A	B	L1	L2	CH1
UNIVERSAL	350	303301	1/8	1/8	21	20	11
		303302	1/4	1/4	26	28	14
	250	303303	3/8	3/8	29	31	19
	225	303304	1/2	1/2	34	37,5	22
	200	303305	5/8	1/2	38	40	27
		303306	3/4	3/4	41	40	27
	160	303307	1	1	45	50	33
		303308	1 1/4	1 1/4	52	60	41
		303309	1 1/2	1 1/2	59	67	48
	100	303310	2	2	78	76	65

Note: If you wish to order a fitting in stainless steel, please change the first two digit from **30..** to **31..**
Articles available on request only

MALE EQUAL TEE ADAPTER Thread BSP Parallel

Type: **3034..**

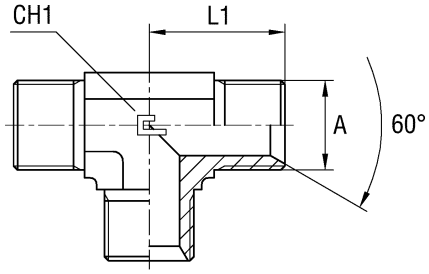

Serie	Bar	Ordering Body	A	L1	CH1
UNIVERSAL	400	303401	1/8	21	11
		303402	1/4	26	14
		303403	3/8	29	19
	350	303404	1/2	34	22
		303405	5/8	38	27
	315	303406	3/4	41	27
	250	303407	1	45	33
	200	303408	1 1/4	52	41
	160	303409	1 1/2	59	48
	125	303410	2	78	65

Note: If you wish to order a fitting in stainless steel, please change the first two digit from **30..** to **31..**

MALE EQUAL TEE ADAPTER Thread Metric Parallel

Type: **3035..**

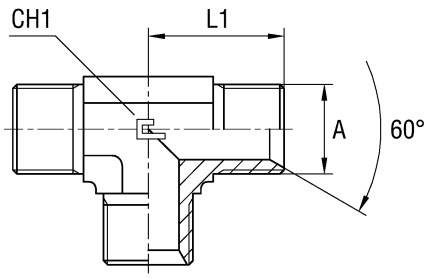

Serie	Bar	Ordering Body	A	L1	CH1
UNIVERSAL	400	303501	10x1	21	11
		303502	12x1,5	21	11
		303503	14x1,5	26	14
		303504	16x1,5	29	19
		303505	18x1,5	29	19
	350	303506	20x1,5	34	22
		303507	22x1,5	34	22
	315	303508	26x1,5	41	27
	250	303509	30x1,5	45	33

Note: If you wish to order a fitting in stainless steel, please change the first two digit from **30..** to **31..**
Articles available on request only

MALE STUD EQUAL CROSS ADAPTER Thread BSP Parallel

Type: **3036..**

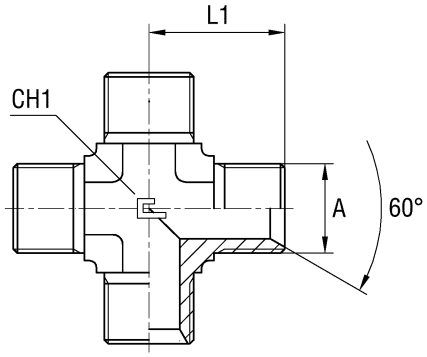

Serie	Bar	Ordering Body	A	L1	CH1
UNIVERSAL	400	303601	1/8	21	11
		303602	1/4	26	14
		303603	3/8	29	19
	350	303604	1/2	34	22
		303605	5/8	38	27
	315	303606	3/4	41	27
	250	303607	1	45	33
	200	303608	1 1/4	52	41
	160	303609	1 1/2	59	48
	125	303610	2	78	65

Note: If you wish to order a fitting in stainless steel, please change the first two digit from **30..** to **31..**
Articles available on scheduled orders only

MALE STUD EQUAL CROSS ADAPTER Thread BSP Parallel / NPT

Type: **3037..**

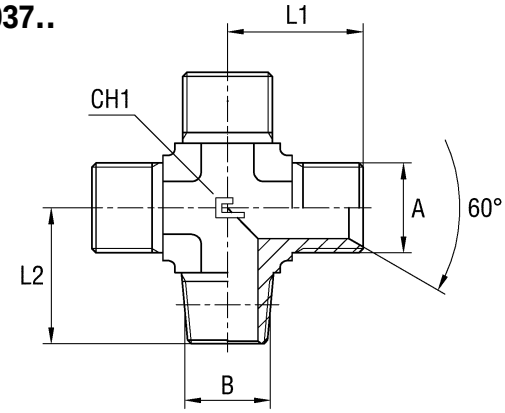

Serie	Bar	Ordering Body	A	B	L1	L2	CH1
UNIVERSAL	350	303701	1/8	1/8	21	20	11
		303702	1/4	1/4	26	28	14
	250	303703	3/8	3/8	29	31	19
	225	303704	1/2	1/2	34	37,5	22
	200	303705	5/8	1/2	38	40	27
		303706	3/4	3/4	41	40	27
	160	303707	1	1	45	50	33
		303708	1 1/4	1 1/4	52	60	41
		303709	1 1/2	1 1/2	59	67	48
	100	303710	2	2	78	76	65

Note: If you wish to order a fitting in stainless steel, please change the first two digit from **30..** to **31..**
Articles available on request only

MALE / FEMALE STUD 90° ADAPTER Thread BSP Parallel / BSP taper

Type: **3038..**

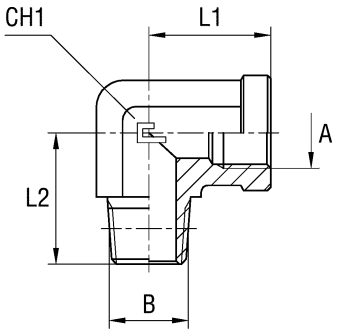

Serie	Bar	Ordering Body	A	B	L1	L2	CH1
UNIVERSAL	350	303801	1/8	1/8	17	20	14
		303802	1/4	1/4	22,5	28	19
	250	303803	3/8	3/8	26	31	22
	225	303804	1/2	1/2	31	37,5	27
	200	303805	3/4	3/4	34,5	40	33
	160	303806	1	1	41	50	41
		303807	1 1/4	1 1/4	43	60	48
		303808	1 1/2	1 1/2	53	67	65
	100	303809	2	2	61	76	71

Note: If you wish to order a fitting in stainless steel, please change the first two digit from **30..** to **31..**
Articles available on scheduled orders only

MALE / FEMALE STUD 90° ADAPTER Thread NPT

Type: **3039..**

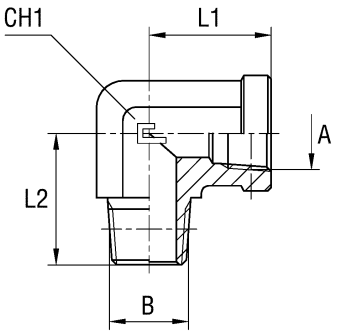

Serie	Bar	Ordering Body	A	B	L1	L2	CH1
UNIVERSAL	350	303901	1/8	1/8	17	20	14
		303902	1/4	1/4	22,5	28	19
	250	303903	3/8	3/8	26	31	22
	225	303904	1/2	1/2	31	37,5	27
	200	303905	3/4	3/4	34,5	40	33
	160	303906	1	1	41	50	41
		303907	1 1/4	1 1/4	43	60	48
		303908	1 1/2	1 1/2	53	67	65
	100	303909	2	2	61	76	71

Note: If you wish to order a fitting in stainless steel, please change the first two digit from **30..** to **31..**
Articles available on scheduled orders only

MALE / FEMALE STUD 45° ADAPTER Thread BSP Parallel / BSP Taper

Type: **3040..**

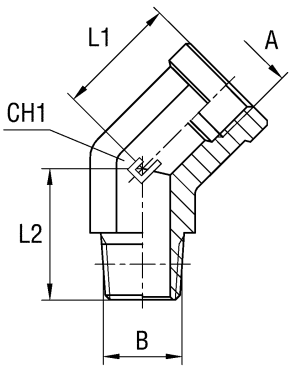

Serie	Bar	Ordering Body	A	B	L1	L2	CH1
UNIVERSAL	350	304001	1/8	1/8	15,5	18	14
		304002	1/4	1/4	21	26,5	19
	250	304003	3/8	3/8	22	27	22
	225	304004	1/2	1/2	26	34	27
	200	304005	3/4	3/4	29,5	35	33
	160	304006	1	1	33	44	41
		304007	1 1/4	1 1/4	39	45,5	48
		304008	1 1/2	1 1/2	43	53	65
	100	304009	2	2	55	57	71

Note: If you wish to order a fitting in stainless steel, please change the first two digit from **30..** to **31..**
Articles available on scheduled orders only

MALE / FEMALE STUD 45° ADAPTER Thread NPT

Type: **3041..**

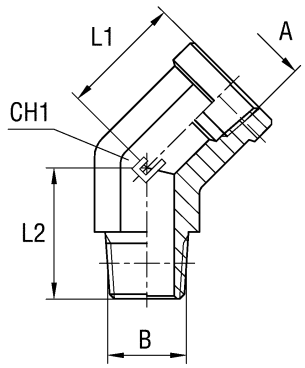

Serie	Bar	Ordering Body	A	B	L1	L2	CH1
UNIVERSAL	350	304101	1/8	1/8	13	18	14
		304102	1/4	1/4	18	26,5	19
	250	304103	3/8	3/8	19,5	27	22
	225	304104	1/2	1/2	24,5	25	27
	200	304105	3/4	3/4	26	35	33
	160	304106	1	1	31	44	41
		304107	1 1/4	1 1/4	37	45,5	48
		304108	1 1/2	1 1/2	43	53	65
	100	304109	2	2	55	57	71

Note: If you wish to order a fitting in stainless steel, please change the first two digit from **30..** to **31..**
Articles available on scheduled orders only

FEMALE 90° ADAPTER Thread BSP Parallel

Type: **3042..**

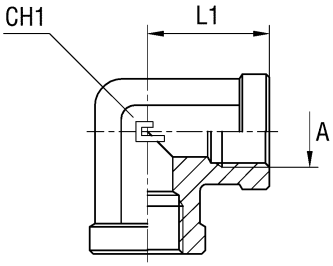

Serie	Bar	Ordering Body	A	L1	CH1
UNIVERSAL	350	304201	1/8	17	14
		304202	1/4	22,5	19
	250	304203	3/8	26	22
	225	304204	1/2	31	27
	200	304205	3/4	34,5	33
	160	304206	1	41	41
		304207	1 1/4	43	48
		304208	1 1/2	53	65
	100	304209	2	61	71

Note: If you wish to order a fitting in stainless steel, please change the first two digit from **30..** to **31..**

FEMALE 90° ADAPTER Thread NPT

Type: **3043..**

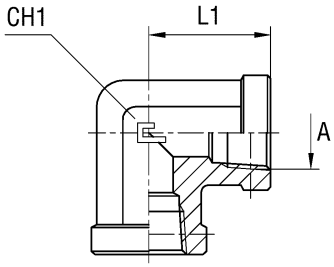

Serie	Bar	Ordering Body	A	L1	CH1
UNIVERSAL	350	304301	1/8	17	14
		304302	1/4	22,5	19
	250	304303	3/8	26	22
	225	304304	1/2	31	27
	200	304305	3/4	34,5	33
	160	304306	1	41	41
		304307	1 1/4	43	48
		304308	1 1/2	53	65
	100	304309	2	61	71

Note: If you wish to order a fitting in stainless steel, please change the first two digit from **30..** to **31..**
Articles available on scheduled orders only

FEMALE 45° ADAPTER Thread BSP Parallel

Type: **3044..**

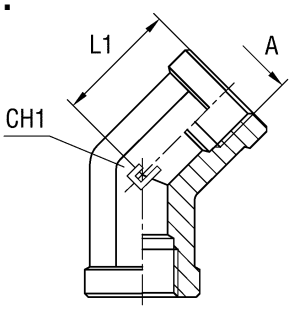

Serie	Bar	Ordering Body	A	L1	CH1
UNIVERSAL	350	304401	1/8	15,5	14
		304402	1/4	21	19
	250	304403	3/8	22	22
	225	304404	1/2	26	27
	200	304405	3/4	29,5	33
	160	304406	1	33	41
		304407	1 1/4	39	48
		304408	1 1/2	43	65
	100	304409	2	55	71

Note: If you wish to order a fitting in stainless steel, please change the first two digit from **30..** to **31..**
Articles available on scheduled orders only

FEMALE 45° ADAPTER Thread NPT

Type: **3045..**

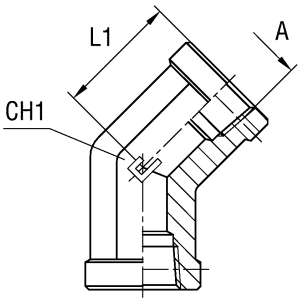

Serie	Bar	Ordering Body	A	L1	CH1
UNIVERSAL	350	304501	1/8	13	14
		304502	1/4	18	19
	250	304503	3/8	19,5	22
	225	304504	1/2	24,5	27
	200	304505	3/4	26	33
	160	304506	1	31	41
		304507	1 1/4	37	48
		304508	1 1/2	43	65
	100	304509	2	55	71

Note: If you wish to order a fitting in stainless steel, please change the first two digit from **30..** to **31..**
Articles available on scheduled orders only

FEMALE STUD BARREL TEE ADAPTER
Thread BSP Parallel / BSP taper

Type: **3046..**

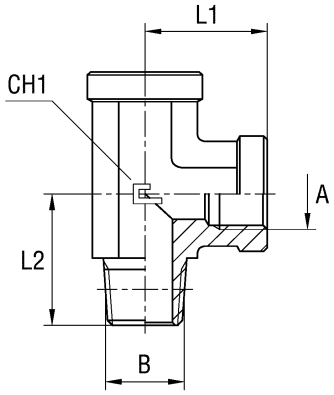

Serie	Bar	Ordering Body	A	B	L1	L2	CH1
UNIVERSAL	350	304601	1/8	1/8	17	20	14
		304602	1/4	1/4	22,5	28	19
	250	304603	3/8	3/8	26	31	22
	225	304604	1/2	1/2	31	37,5	27
	200	304605	3/4	3/4	34,5	40	33
	160	304606	1	1	41	50	41
		304607	1 1/4	1 1/4	43	60	48
		304608	1 1/2	1 1/2	53	67	65
	100	304609	2	2	61	76	71

Note: If you wish to order a fitting in stainless steel, please change the first two digit from **30..** to **31..**
Articles available on request only

FEMALE STUD BARREL TEE ADAPTER Thread NPT

Type: **3047..**

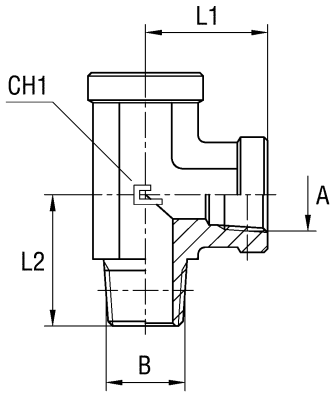

Serie	Bar	Ordering Body	A	B	L1	L2	CH1
UNIVERSAL	350	304701	1/8	1/8	17	20	14
		304702	1/4	1/4	22,5	28	19
	250	304703	3/8	3/8	26	31	22
	225	304704	1/2	1/2	31	37,5	27
	200	304705	3/4	3/4	34,5	40	33
	160	304706	1	1	41	50	41
		304707	1 1/4	1 1/4	43	60	48
		304708	1 1/2	1 1/2	53	67	65
	100	304709	2	2	61	76	71

Note: If you wish to order a fitting in stainless steel, please change the first two digit from **30..** to **31..**
Articles available on request only

FEMALE STUD BRANCH TEE ADAPTER
Thread BSP Parallel / BSP taper

Type: **3048..**

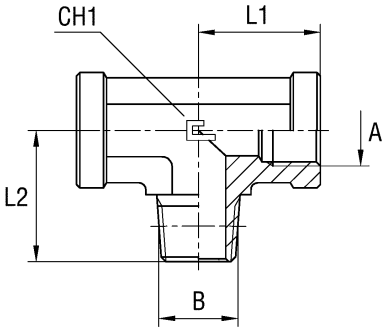

Serie	Bar	Ordering Body	A	B	L1	L2	CH1
UNIVERSAL	350	304801	1/8	1/8	17	20	14
		304802	1/4	1/4	22,5	28	19
	250	304803	3/8	3/8	26	31	22
	225	304804	1/2	1/2	31	37,5	27
	200	304805	3/4	3/4	34,5	40	33
	160	304806	1	1	41	50	41
		304807	1 1/4	1 1/4	43	60	48
		304808	1 1/2	1 1/2	53	67	65
	100	304809	2	2	61	76	71

Note: If you wish to order a fitting in stainless steel, please change the first two digit from **30..** to **31..**
Articles available on request only

FEMALE STUD BRANCH TEE ADAPTER Thread NPT

Type: **3049..**

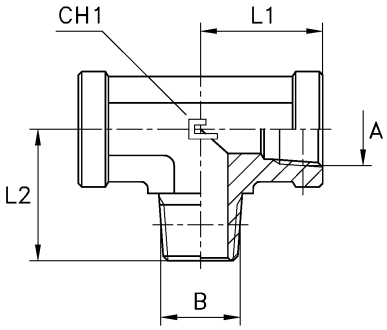

Serie	Bar	Ordering Body	A	B	L1	L2	CH1
UNIVERSAL	350	304901	1/8	1/8	17	20	14
		304902	1/4	1/4	22,5	28	19
	250	304903	3/8	3/8	26	31	22
	225	304904	1/2	1/2	31	37,5	27
	200	304905	3/4	3/4	34,5	40	33
	160	304906	1	1	41	50	41
		304907	1 1/4	1 1/4	43	60	48
		304908	1 1/2	1 1/2	53	67	65
	100	304909	2	2	61	76	71

Note: If you wish to order a fitting in stainless steel, please change the first two digit from **30..** to **31..**
Articles available on request only

FEMALE EQUAL TEE ADAPTER Thread BSP Parallel

Type: **3050..**

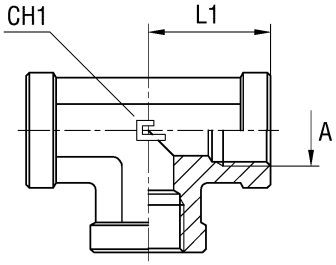

Serie	Bar	Ordering Body	A	L1	CH1
UNIVERSAL	350	305001	1/8	17	14
		305002	1/4	22,5	19
	250	305003	3/8	26	22
	225	305004	1/2	31	27
	200	305005	3/4	34,5	33
	160	305006	1	41	41
		305007	1 1/4	43	48
		305008	1 1/2	53	65
	100	305009	2	61	71

Note: If you wish to order a fitting in stainless steel, please change the first two digit from **30..** to **31..**

FEMALE EQUAL TEE ADAPTER Thread NPT

Type: **3051..**

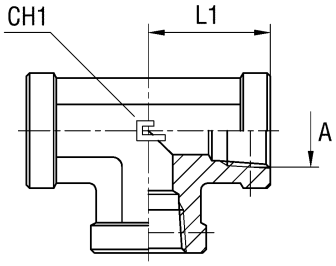

Serie	Bar	Ordering Body	A	L1	CH1
UNIVERSAL	350	305101	1/8	17	14
		305102	1/4	22,5	19
	250	305103	3/8	26	22
	225	305104	1/2	31	27
	200	305105	3/4	34,5	33
	160	305106	1	41	41
		305107	1 1/4	43	48
		305108	1 1/2	53	65
	100	305109	2	61	71

Note: If you wish to order a fitting in stainless steel, please change the first two digit from **30..** to **31..**
Articles available on scheduled orders only

FEMALE EQUAL CROSS ADAPTER Thread BSP Parallel

Type: **3052..**

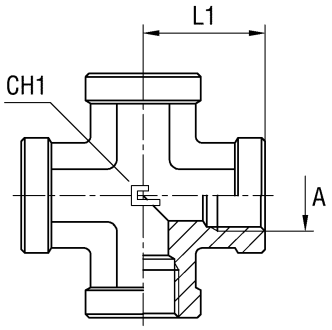

Serie	Bar	Ordering Body	A	L1	CH1
UNIVERSAL	350	305201	1/8	17	14
		305202	1/4	22,5	19
	250	305203	3/8	26	22
	225	305204	1/2	31	27
	200	305205	3/4	34,5	33
	160	305206	1	41	41
		305207	1 1/4	43	48
		305208	1 1/2	53	65
	100	305209	2	61	71

Note: If you wish to order a fitting in stainless steel, please change the first two digit from **30..** to **31..**
Articles available on scheduled orders only

FEMALE EQUAL CROSS ADAPTER Thread NPT

Type: **3053..**

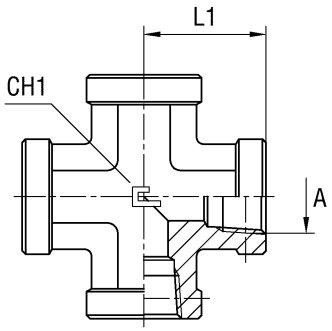

Serie	Bar	Ordering Body	A	L1	CH1
UNIVERSAL	350	305301	1/8	17	14
		305302	1/4	22,5	19
	250	305303	3/8	26	22
	225	305304	1/2	31	27
	200	305305	3/4	34,5	33
	160	305306	1	41	41
		305307	1 1/4	43	48
		305308	1 1/2	53	65
	100	305309	2	61	71

Note: If you wish to order a fitting in stainless steel, please change the first two digit from **30..** to **31..**
Articles available on scheduled orders only

90° ADJUSTABLE ADAPTER WITH O-RING AND WASHER Thread BSP Parallel

Type: **3054..**

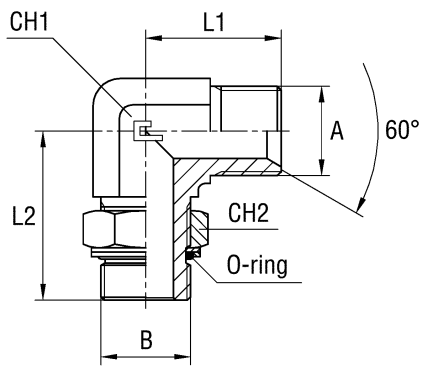

Serie	Bar	Ordering Body	A	B	L1	L2	CH1	CH2
UNIVERSAL	350	305401	1/8	1/8	21	26	11	14
		305402	1/4	1/8	26	30	14	14
	315	305403	1/4	1/4	26	32	14	19
		305404	3/8	1/4	29	37	19	19
	250	305405	3/8	3/8	29	37	19	22
		305406	1/2	3/8	34	39	22	22
		305407	1/2	1/2	34	43	22	30
		305408	3/4	1/2	41	47	27	30
		305409	3/4	3/4	41	49	27	36
		305410	1	3/4	45	50	33	36
	200	305411	1	1	45	52	33	46
		305412	1 1/4	1	52	58	41	46
		305413	1 1/4	1 1/4	52	58	41	50
	160	305414	1 1/2	1 1/4	59	59	48	50
		305415	1 1/2	1 1/2	59	60	48	55
	125	305416	2	1 1/2	78	74	65	55
		305417	2	2	78	74	65	70

Note: If you wish to order a fitting in stainless steel, please change the first two digit from **30..** to **31..**

90° ADJUSTABLE ADAPTER WITH O-RING AND WASHER Thread Metric Parallel

Type: **3055..**

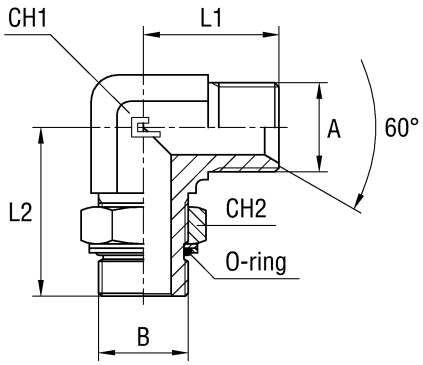

Serie	Bar	Ordering Body	A	B	L1	L2	CH1	CH2
UNIVERSAL	350	305501	12x1,5	10x1	21	27	11	14
	315	305502	12x1,5	12x1,5	24	31	14	17
		305503	14x1,5	12x1,5	26	31	14	17
		305504	14x1,5	14x1,5	26	33	14	19
		305505	16x1,5	14x1,5	29	36	19	19
		305506	16x1,5	16x1,5	29	38	19	22
		305507	18x1,5	16x1,5	29	38	19	22
		305508	18x1,5	18x1,5	29	38	19	24
		305509	22x1,5	18x1,5	34	40	22	24
	250	305510	22x1,5	22x1,5	34	42	22	27
		305511	26x1,5	22x1,5	41	46	27	27
		305512	26x1,5	27x2	41	50,5	27	32
		305513	30x1,5	27x2	45	52,5	33	32
	200	305514	30x1,5	33x2	45	52,5	33	41

Note: If you wish to order a fitting in stainless steel, please change the first two digit from **30..** to **31..**
Articles available on scheduled orders only

45° ADJUSTABLE ADAPTER WITH O-RING AND WASHER Thread BSP Parallel

Type: **3056..**

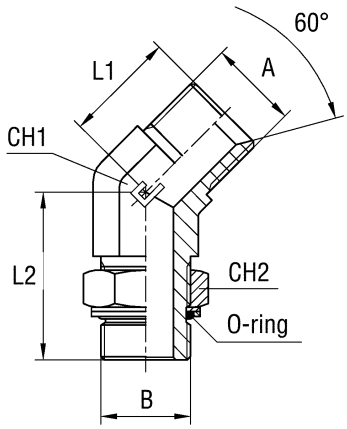

Serie	Bar	Ordering Body	A	B	L1	L2	CH1	CH2
UNIVERSAL	350	305601	1/8	1/8	20,5	26	11	14
		305602	1/4	1/8	21	27	14	14
	315	305603	1/4	1/4	21	29	14	19
		305604	3/8	1/4	23,5	30	19	19
	250	305605	3/8	3/8	23,5	33	19	22
		305606	1/2	3/8	26	35	22	22
		305607	1/2	1/2	26	38,5	22	30
		305608	3/4	1/2	32	38,5	27	30
		305609	3/4	3/4	32	44	27	36
		305610	1	3/4	37	44	33	36
	200	305611	1	1	37	47	33	46
		305612	1 1/4	1	39	45	41	46
		305613	1 1/4	1 1/4	39	48	41	50
	160	305614	1 1/2	1 1/4	46	48	48	50
		305615	1 1/2	1 1/2	46	48	48	55
	125	305616	2	1 1/2	57	57	65	55
		305617	2	2	57	57	65	70

Note: If you wish to order a fitting in stainless steel, please change the first two digit from **30..** to **31..**
Articles available on scheduled orders only

45° ADJUSTABLE ADAPTER WITH O-RING AND WASHER Thread Metric Parallel

Type: **3057..**

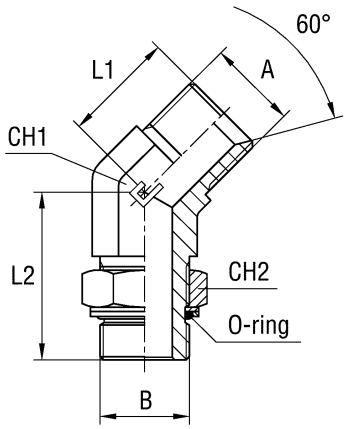

Serie	Bar	Ordering Body	A	B	L1	L2	CH1	CH2
UNIVERSAL	350	305701	12x1,5	10x1	20,5	27	11	14
	315	305702	12x1,5	12x1,5	21	27	14	17
		305703	14x1,5	12x1,5	21	27	14	17
		305704	14x1,5	14x1,5	21	33	14	19
		305705	16x1,5	14x1,5	23,5	30	19	19
		305706	16x1,5	16x1,5	23,5	33	19	22
		305707	18x1,5	16x1,5	23,5	33	19	22
		305708	18x1,5	18x1,5	23,5	33	19	24
		305709	22x1,5	18x1,5	26	36	22	24
	250	305710	22x1,5	22x1,5	26	38	22	27
		305711	26x1,5	22x1,5	32	37,5	27	27
		305712	26x1,5	27x2	32	46	27	32
		305713	30x1,5	27x2	37	46	33	32
	200	305714	30x1,5	33x2	37	46	33	41

Note: If you wish to order a fitting in stainless steel, please change the first two digit from **30..** to **31..**
Articles available on scheduled orders only

ADJUSTABLE MALE STUD BARREL TEE WITH O-RING AND WASHER Thread BSP Parallel

Type: **3058..**

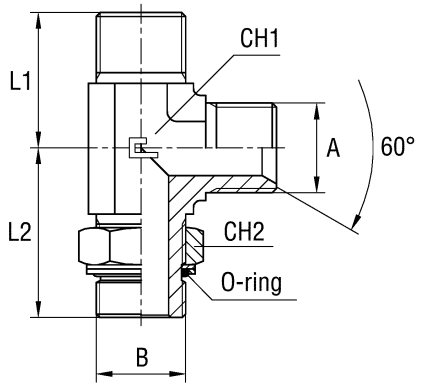

Serie	Bar	Ordering Body	A	B	L1	L2	CH1	CH2
UNIVERSAL	350	305801	1/8	1/8	21	26	11	14
		305802	1/4	1/8	26	30	14	14
	315	305803	1/4	1/4	26	32	14	19
		305804	3/8	1/4	29	34	19	19
	250	305805	3/8	3/8	29	37	19	22
		305806	1/2	3/8	34	39	22	22
		305807	1/2	1/2	34	43	22	30
		305808	3/4	1/2	41	47	27	30
		305809	3/4	3/4	41	49	27	36
		305810	1	3/4	45	49	33	36
	200	305811	1	1	45	52	33	41
		305812	1 1/4	1	52	58	41	41
		305813	1 1/4	1 1/4	52	57	41	50
	160	305814	1 1/2	1 1/4	59	59	48	50
		305815	1 1/2	1 1/2	59	60	48	55
	125	305816	2	1 1/2	78	74	65	55
		305817	2	2	78	74	65	70

Note: If you wish to order a fitting in stainless steel, please change the first two digit from **30..** to **31..**

ADJUSTABLE MALE STUD BARREL TEE WITH O-RING AND WASHER Thread Metric Parallel

Type: **3059..**

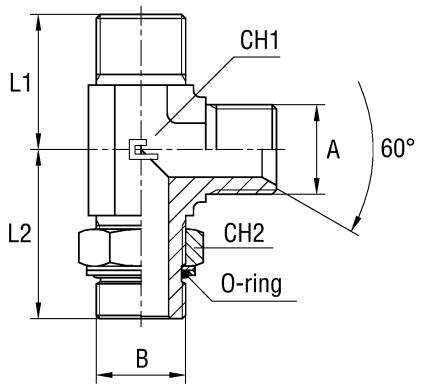

Serie	Bar	Ordering Body	A	B	L1	L2	CH1	CH2
UNIVERSAL	350	305901	12x1,5	10x1	21	27	11	14
	315	305902	12x1,5	12x1,5	24	31	14	17
		305903	14x1,5	12x1,5	26	31	14	17
		305904	14x1,5	14x1,5	26	33	14	19
		305905	16x1,5	14x1,5	29	35	19	19
		305906	16x1,5	16x1,5	29	38	19	22
		305907	18x1,5	16x1,5	29	38	19	22
		305908	18x1,5	18x1,5	29	38	19	24
		305909	22x1,5	18x1,5	34	40	22	24
	250	305910	22x1,5	22x1,5	34	42	22	27
		305911	26x1,5	22x1,5	41	44	27	27
		305912	26x1,5	27x2	41	50,5	27	32
		305913	30x1,5	27x2	45	50,5	33	32
	200	305914	30x1,5	33x2	45	52,5	33	41

Note: If you wish to order a fitting in stainless steel, please change the first two digit from **30..** to **31..**
Articles available on scheduled orders only

ADJUSTABLE MALE STUD BRANCH TEE WITH O-RING AND WASHER Thread BSP Parallel

Type: **3060..**

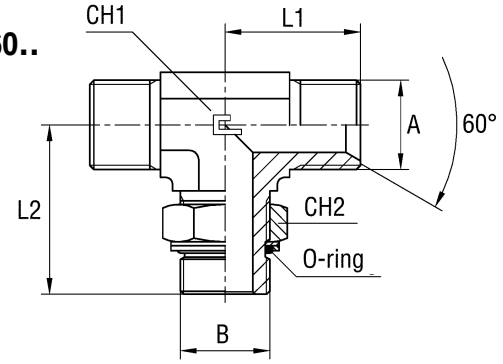

Serie	Bar	Ordering Body	A	B	L1	L2	CH1	CH2
UNIVERSAL	350	306001	1/8	1/8	21	26	11	14
		306002	1/4	1/8	26	30	14	14
	315	306003	1/4	1/4	26	32	14	19
		306004	3/8	1/4	29	34	19	19
	250	306005	3/8	3/8	29	37	19	22
		306006	1/2	3/8	34	39	22	22
		306007	1/2	1/2	34	43	22	30
		306008	3/4	1/2	41	47	27	30
		306009	3/4	3/4	41	49	27	36
		306010	1	3/4	45	49	33	36
	200	306011	1	1	45	52	33	41
		306012	1 1/4	1	52	55	41	41
		306013	1 1/4	1 1/4	52	57	41	50
	160	306014	1 1/2	1 1/4	59	59	48	50
		306015	1 1/2	1 1/2	59	60	48	55
	125	306016	2	1 1/2	78	74	65	55
		306017	2	2	78	74	65	70

Note: If you wish to order a fitting in stainless steel, please change the first two digit from **30..** to **31..**

ADJUSTABLE MALE STUD BRANCH TEE WITH O-RING AND WASHER Thread Metric Parallel

Type: **3061..**

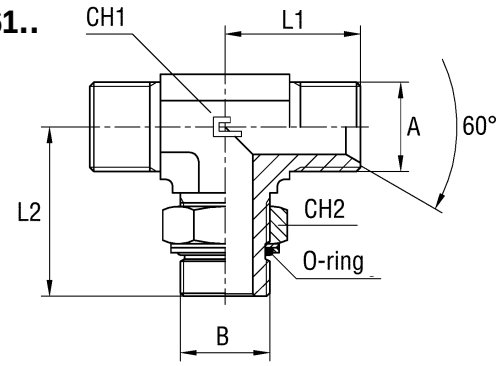

Serie	Bar	Ordering Body	A	B	L1	L2	CH1	CH2
UNIVERSAL	350	306101	12x1,5	10x1	21	27	11	14
	315	306102	12x1,5	12x1,5	24	31	14	17
		306103	14x1,5	12x1,5	26	31	14	17
		306104	14x1,5	14x1,5	26	33	14	19
		306105	16x1,5	14x1,5	29	34	19	19
		306106	16x1,5	16x1,5	29	38	19	22
		306107	18x1,5	16x1,5	29	38	19	22
		306108	18x1,5	18x1,5	29	38	19	24
		306109	22x1,5	18x1,5	34	40	22	24
	250	306110	22x1,5	22x1,5	34	42	22	27
		306111	26x1,5	22x1,5	41	44	27	27
		306112	26x1,5	27x2	41	50,5	27	32
		306113	30x1,5	27x2	45	50,5	33	32
	200	306114	30x1,5	33x2	45	52,5	33	41

Note: If you wish to order a fitting in stainless steel, please change the first two digit from **30..** to **31..**
Articles available on scheduled orders only

90° ADAPTER WITH SWIVEL NUT Thread BSP Parallel / BSP Taper

Type: **3062..**

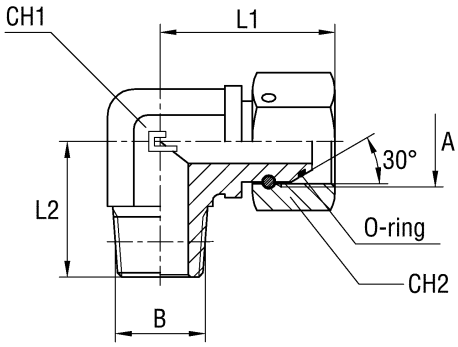

Serie	Bar	Ordering Body	A	B	L1	L2	CH1	CH2
UNIVERSAL	350	306201	1/8	1/8	25	20	11	14
		306202	1/4	1/4	33	28	14	19
	250	306203	3/8	3/8	37	31	19	22
	225	306204	1/2	1/2	43	37,5	22	27
	200	306205	5/8	1/2	49	37,5	27	30
		306206	3/4	3/4	53,5	40	27	32
	160	306207	1	1	60,5	50	33	41
		306208	1 1/4	1 1/4	64	60	41	50
		306209	1 1/2	1 1/2	72,5	67	48	55
	100	306210	2	2	91	76	65	70

Note: If you wish to order a fitting in stainless steel, please change the first two digit from **30..** to **31..**

90° ADAPTER WITH SWIVEL NUT Thread BSP Parallel / NPT

Type: **3063..**

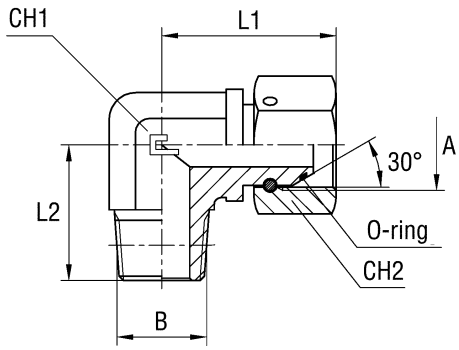

Serie	Bar	Ordering Body	A	B	L1	L2	CH1	CH2
UNIVERSAL	350	306301	1/8	1/8	25	20	11	14
		306302	1/4	1/4	33	28	14	19
	250	306303	3/8	3/8	37	31	19	22
	225	306304	1/2	1/2	43	37,5	22	27
	200	306305	5/8	1/2	49	37,5	27	30
		306306	3/4	3/4	53,5	40	27	32
	160	306307	1	1	60,5	50	33	41
		306308	1 1/4	1 1/4	64	60	41	50
		306309	1 1/2	1 1/2	72,5	67	48	55
	100	306310	2	2	91	76	65	70

Note: If you wish to order a fitting in stainless steel, please change the first two digit from **30..** to **31..**
Articles available on request only

90° ADAPTER WITH SWIVEL NUT Thread BSP Parallel

Type: **3064..**

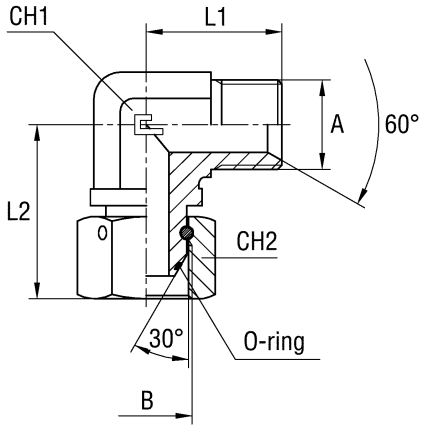

Serie	Bar	Ordering Body	A	B	L1	L2	CH1	CH2
UNIVERSAL	400	306401	1/8	1/8	21	25	11	14
		306402	1/4	1/4	26	33	14	19
		306403	3/8	3/8	29	37	19	22
	350	306404	1/2	1/2	34	43	22	27
		306405	5/8	5/8	38	49	27	30
	315	306406	3/4	3/4	41	53,5	27	32
	250	306407	1	1	45	60,5	33	41
	200	306408	1 1/4	1 1/4	57	64	41	50
	160	306409	1 1/2	1 1/2	59	75,5	48	55
	125	306410	2	2	78	91	65	70

Note: If you wish to order a fitting in stainless steel, please change the first two digit from **30..** to **31..**

90° ADAPTER WITH SWIVEL NUT Thread Metric Parallel

Type: **3065..**

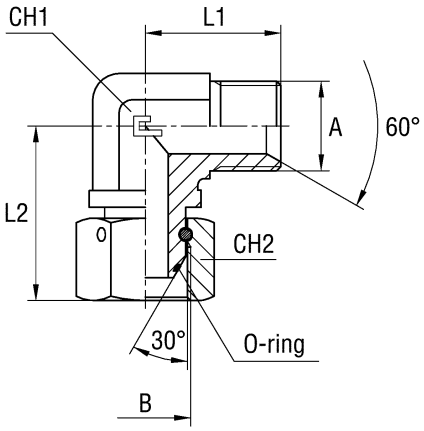

Serie	Bar	Ordering Body	A	B	L1	L2	CH1	CH2
UNIVERSAL	400	306501	12x1,5	12x1,5	21	26	11	14
		306502	14x1,5	14x1,5	26	33	14	19
		306503	16x1,5	16x1,5	29	37	19	22
		306504	18x1,5	18x1,5	29	38	19	24
	350	306505	20x1,5	20x1,5	34	44	22	27
		306506	22x1,5	22x1,5	34	44	22	27
	315	306507	26x1,5	26x1,5	41	53	27	32
	250	306508	30x1,5	30x1,5	45	58	33	36

Note: If you wish to order a fitting in stainless steel, please change the first two digit from **30..** to **31..**
Articles available on request only

BARREL TEE ADAPTER WITH SWIVEL NUT Thread BSP Parallel

Type: **3066..**

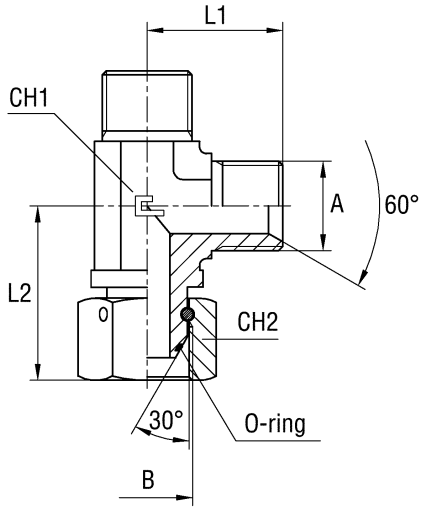

Serie	Bar	Ordering Body	A	B	L1	L2	CH1	CH2
UNIVERSAL	400	306601	1/8	1/8	21	25	11	14
		306602	1/4	1/4	26	33	14	19
		306603	3/8	3/8	29	37	19	22
	350	306604	1/2	1/2	34	43	22	27
		306605	5/8	5/8	38	49	27	30
	315	306606	3/4	3/4	41	53,5	27	32
	250	306607	1	1	45	60,5	33	41
	200	306608	1 1/4	1 1/4	57	64	41	50
	160	306609	1 1/2	1 1/2	59	72,5	48	55
	125	306610	2	2	78	91	65	70

Note: If you wish to order a fitting in stainless steel, please change the first two digit from **30..** to **31..**

BARREL TEE ADAPTER WITH SWIVEL NUT Thread Metric Parallel

Type: **3067..**

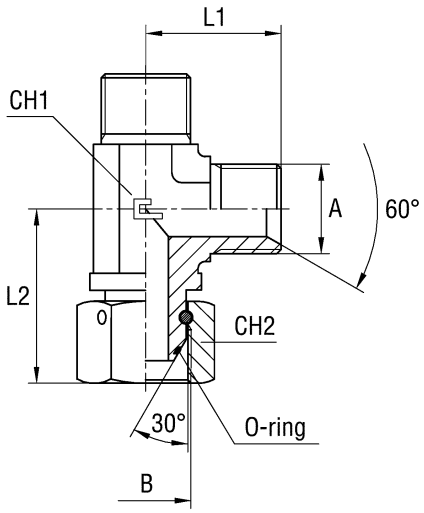

Serie	Bar	Ordering Body	A	B	L1	L2	CH1	CH2
UNIVERSAL	400	306701	12x1,5	12x1,5	21	26	11	14
		306702	14x1,5	14x1,5	26	33	14	19
		306703	16x1,5	16x1,5	29	37	19	22
		306704	18x1,5	18x1,5	29	38	19	24
	350	306705	20x1,5	20x1,5	34	44	22	27
		306706	22x1,5	22x1,5	34	44	22	27
	315	306707	26x1,5	26x1,5	41	53	27	32
	250	306708	30x1,5	30x1,5	45	58	33	36

Note: If you wish to order a fitting in stainless steel, please change the first two digit from **30..** to **31..**
Articles available on request only

BRANCH TEE ADAPTER WITH SWIVEL NUT Thread BSP Parallel

Type: **3068..**

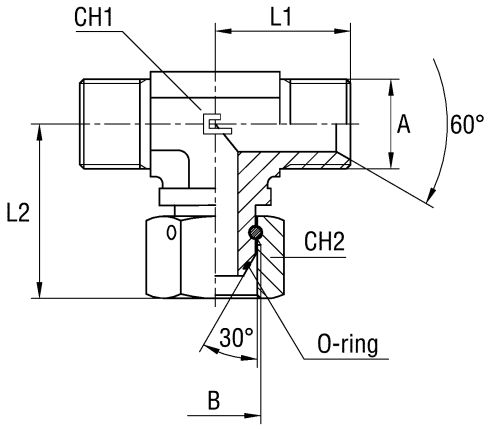

Serie	Bar	Ordering Body	A	B	L1	L2	CH1	CH2
UNIVERSAL	400	306801	1/8	1/8	21	25	11	14
		306802	1/4	1/4	26	33	14	19
		306803	3/8	3/8	29	37	19	22
	350	306804	1/2	1/2	34	43	22	27
		306805	5/8	5/8	38	49	27	30
	315	306806	3/4	3/4	41	53,5	27	32
	250	306807	1	1	45	60,5	33	41
	200	306808	1 1/4	1 1/4	57	64	41	50
	160	306809	1 1/2	1 1/2	59	72,5	48	55
	125	306810	2	2	78	91	65	70

Note: If you wish to order a fitting in stainless steel, please change the first two digit from **30..** to **31..**

BRANCH TEE ADAPTER WITH SWIVEL NUT Thread Metric Parallel

Type: **3069..**

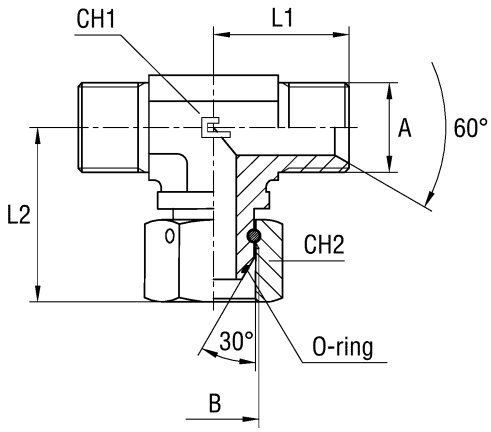

Serie	Bar	Ordering Body	A	B	L1	L2	CH1	CH2
UNIVERSAL	400	306901	12x1,5	12x1,5	21	26	11	14
		306902	14x1,5	14x1,5	26	33	14	19
		306903	16x1,5	16x1,5	29	37	19	22
		306904	18x1,5	18x1,5	29	38	19	24
	350	306905	20x1,5	20x1,5	34	44	22	27
		306906	22x1,5	22x1,5	34	44	22	27
	315	306907	26x1,5	26x1,5	41	53	27	32
	250	306908	30x1,5	30x1,5	45	58	33	36

Note: If you wish to order a fitting in stainless steel, please change the first two digit from **30..** to **31..**
Articles available on request only

EQUAL TEE ADAPTER WITH SWIVEL NUT Thread BSP Parallel

Type: **3070..**

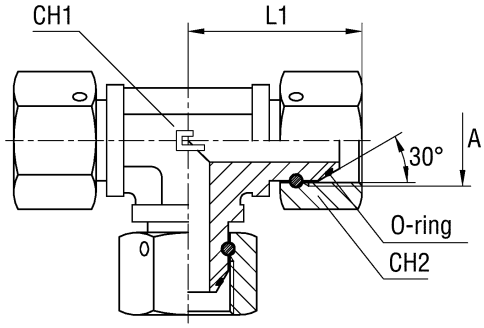

Serie	Bar	Ordering Body	A	L1	CH1	CH2
UNIVERSAL	400	307001	1/8	25	11	14
		307002	1/4	33	14	19
		307003	3/8	37	19	22
	350	307004	1/2	43	22	27
		307005	5/8	49	27	30
	315	307006	3/4	53,5	27	32
	250	307007	1	60,5	33	41
	200	307008	1 1/4	64	41	50
	160	307009	1 1/2	75,5	48	55
	125	307010	2	91	65	70

Note: If you wish to order a fitting in stainless steel, please change the first two digit from **30..** to **31..**

EQUAL TEE ADAPTER WITH SWIVEL NUT Thread Metric Parallel

Type: **3071..**

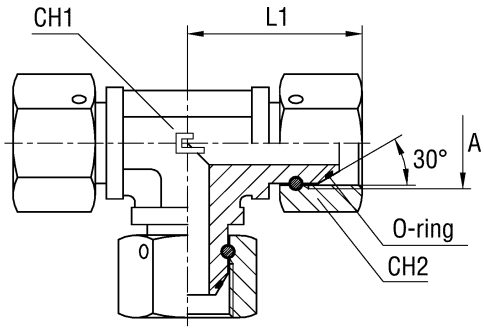

Serie	Bar	Ordering Body	A	L1	CH1	CH2
UNIVERSAL	400	307101	12x1,5	26	11	14
		307102	14x1,5	33	14	19
		307103	16x1,5	37	19	22
		307104	18x1,5	38	19	24
	350	307105	20x1,5	44	22	27
		307106	22x1,5	44	22	27
	315	307107	26x1,5	53	27	32
	250	307108	30x1,5	58	33	36

Note: If you wish to order a fitting in stainless steel, please change the first two digit from **30..** to **31..**
Articles available on request only

MALE STUD ADAPTER WITH ELASTOMER SEAL Thread BSP Parallel

Type: **3072..**

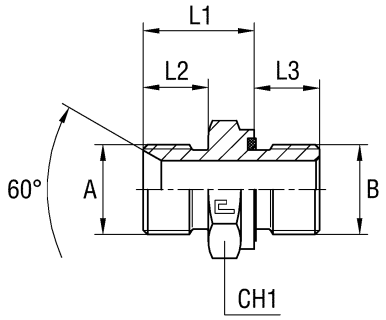

Serie	Bar	Ordering Body	A	B	L1	L2	L3	CH1
UNIVERSAL	350	307201	1/8	1/8	14,5	8	8	14
		307202	1/4	1/4	19	11	12	19
	250	307203	3/8	3/8	20,5	12	12	22
	225	307204	1/2	1/2	24	14	14	27
	200	307205	5/8	1/2	26	16	14	27
		307206	3/4	3/4	28	16	16	32
	160	307207	1	1	32	19	18	41
		307208	1 1/4	1 1/4	37	20	20	50
		307209	1 1/2	1 1/2	40	23	22	55
	100	307210	2	2	45,5	25	24	70

Note: If you wish to order a fitting in stainless steel, please change the first two digit from **30..** to **31..**
Articles available on request only

MALE STUD ADAPTER WITH SWIVEL NUT AND ELASTOMER SEAL Thread BSP Parallel

Type: **3073..**

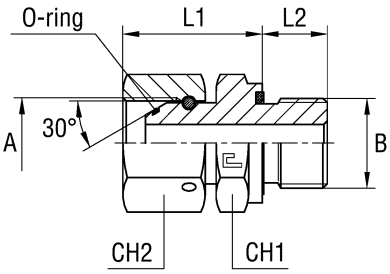

Serie	Bar	Ordering Body	A	B	L1	L2	CH1	CH2
UNIVERSAL	350	307301	1/8	1/8	20	8	14	14
		307302	1/4	1/4	25	12	19	19
	250	307303	3/8	3/8	27	12	22	22
	225	307304	1/2	1/2	31	14	27	27
	200	307305	5/8	1/2	35	14	27	30
		307306	3/4	3/4	37	16	32	32
	160	307307	1	1	44,5	18	41	41
		307308	1 1/4	1 1/4	47	20	50	50
		307309	1 1/2	1 1/2	54,5	22	55	55
	100	307310	2	2	62	24	70	70

Note: If you wish to order a fitting in stainless steel, please change the first two digit from **30..** to **31..**
Articles available on request only

MALE STUD ADAPTER WITH O-RING AND WASHER
Thread BSP Parallel

Type: **3074..**

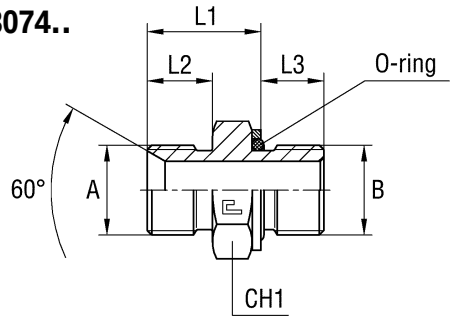

Serie	Bar	Ordering Body	A	B	L1	L2	CH1	CH2
UNIVERSAL	350	307401	1/8	1/8	14,3	8	6,7	14
		307402	1/4	1/4	19,3	11	10,2	19
	250	307403	3/8	3/8	20,3	12	10,2	22
	225	307404	1/2	1/2	24,3	14	12,2	27
	200	307405	5/8	1/2	26,3	16	12,2	27
		307406	3/4	3/4	27,8	16	14,2	32
	160	307407	1	1	32,1	19	15,4	41
		307408	1 1/4	1 1/4	37,1	20	17,4	50
		307409	1 1/2	1 1/2	40,1	23	19,4	55
	100	307410	2	2	44,6	25	21,4	70

Note: If you wish to order a fitting in stainless steel, please change the first two digit from **30..** to **31..**
Articles available on request only

MALE STUD ADAPTER WITH O-RING AND WASHER
Thread Metric Parallel

Type: **3075..**

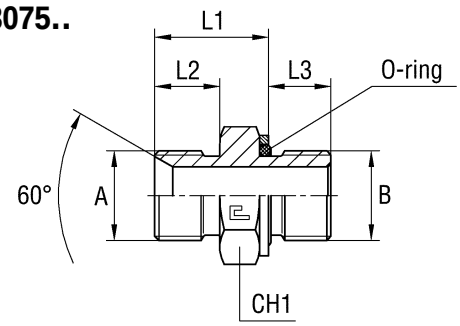

Serie	Bar	Ordering Body	A	B	L1	L2	CH1	CH2
UNIVERSAL	350	307501	12x1,5	12x1,5	20,4	12	9,6	17
	300	307502	14x1,5	14x1,5	20,4	12	9,6	19
	250	307503	16x1,5	16x1,5	20,9	12	11,1	22
		307504	18x1,5	18x1,5	22,9	12	12,6	24
	225	307505	20x1,5	22x1,5	25,4	14	13,6	27
	200	307506	22x1,5	22x1,5	25,4	14	13,6	27
		307507	26x1,5	27x2	28,5	16	16,5	32
	180	307508	30x1,5	33x2	29,5	16	16,5	36

Note: If you wish to order a fitting in stainless steel, please change the first two digit from **30..** to **31..**
Articles available on request only

MALE STUD ADAPTER WITH SWIVEL NUT O-RING AND WASHER
Thread BSP Parallel

Type: **3076..**

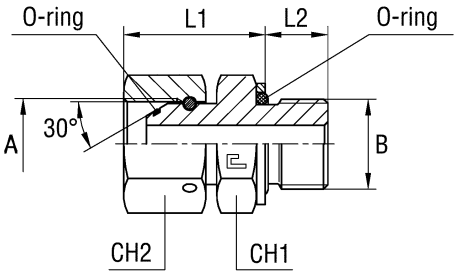

Serie	Bar	Ordering Body	A	B	L1	L2	CH1	CH2
UNIVERSAL	350	307601	1/8	1/8	19,8	6,7	14	14
		307602	1/4	1/4	25	10,2	19	19
	250	307603	3/8	3/8	26,3	10,2	22	22
	225	307604	1/2	1/2	30	12,2	27	27
	200	307605	5/8	1/2	33,8	12,2	27	27
		307606	3/4	3/4	35,8	14,2	32	32
	160	307607	1	1	44,1	15,4	41	41
		307608	1 1/4	1 1/4	46,6	17,4	50	50
		307609	1 1/2	1 1/2	54,1	19,4	55	55
	100	307610	2	2	61,1	21,4	70	70

Note: If you wish to order a fitting in stainless steel, please change the first two digit from **30..** to **31..**
Articles available on request only

MALE STUD ADAPTER WITH SWIVEL NUT O-RING AND WASHER
Thread Metric Parallel

Type: **3077..**

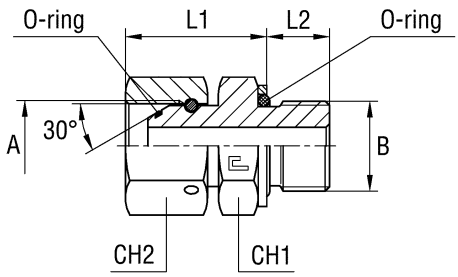

Serie	Bar	Ordering Body	A	B	L1	L2	CH1	CH2
UNIVERSAL	350	307701	12x1,5	12x1,5	23,4	9,6	17	17
	300	307702	14x1,5	14x1,5	25,6	9,6	19	19
	250	307703	16x1,5	16x1,5	26,9	11,1	22	22
		307704	18x1,5	18x1,5	29,9	12,6	24	24
	225	307705	20x1,5	22x1,5	33,4	13,6	27	27
	200	307706	22x1,5	22x1,5	34,4	13,6	27	27
		307707	26x1,5	27x2	37,7	16,5	32	32
	180	307708	30x1,5	33x2	40,6	16,5	36	36

Note: If you wish to order a fitting in stainless steel, please change the first two digit from **30..** to **31..**
Articles available on request only

MALE PLUG Thread BSP Parallel

Type: **3078..**

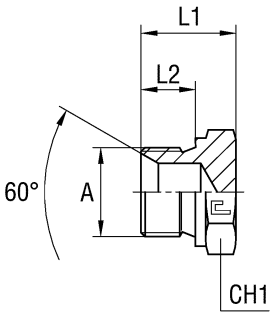

Serie	Bar	Ordering Body	A	L1	CH1	CH2
UNIVERSAL	400	307801	1/8	14,5	8	14
		307802	1/4	19	11	19
		307803	3/8	20,5	12	22
	350	307804	1/2	24	14	27
		307805	5/8	26	16	30
	315	307806	3/4	28	16	32
	250	307807	1	32	19	41
	200	307808	1 1/4	35	20	50
	160	307809	1 1/2	40	23	55
	125	307810	2	45,5	25	70

Note: If you wish to order a fitting in stainless steel, please change the first two digit from **30..** to **31..**
Articles available on scheduled orders only
For copper washer sealing systems refer to items **3001..** pressure rates

FEMALE PLUG WITH SWIVEL NUT Thread BSP Parallel

Type: **3079..**

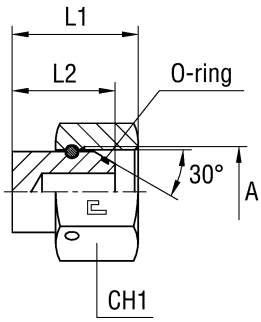

Serie	Bar	Ordering Body	A	L1	CH1	CH2
UNIVERSAL	400	307901	1/8	15	12	14
		307902	1/4	19	15	19
		307903	3/8	20	15	22
	350	307904	1/2	24	19	27
		307905	5/8	26	19	30
	315	307906	3/4	30	21	32
	250	307907	1	35	24,5	41
	200	307908	1 1/4	36	27	50
	160	307909	1 1/2	42	29,5	55
	125	307910	2	45	30	70

Note: If you wish to order a fitting in stainless steel, please change the first two digit from **30..** to **31..**
Articles available on request only

90° ELBOW ADAPTER WITH DOUBLE SWIVEL NUT Thread BSP Parallel

Type: **3080..**

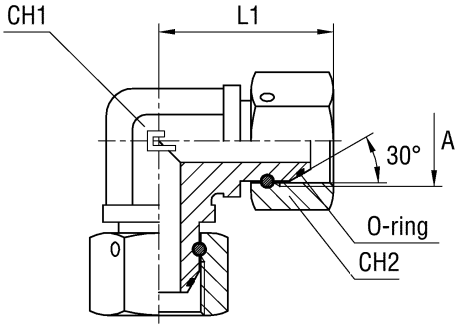

Serie	Bar	Ordering Body	A	L1	CH1	CH2
UNIVERSAL	400	308001	1/8	25	11	14
		308002	1/4	33	14	19
		308003	3/8	37	19	22
	350	308004	1/2	43	22	27
		308005	5/8	49	27	30
	315	308006	3/4	53,5	27	32
	250	308007	1	60,5	33	41
	200	308008	1 1/4	64	41	50
	160	308009	1 1/2	72,5	48	55
	125	308010	2	91	65	70

Note: If you wish to order a fitting in stainless steel, please change the first two digit from **30..** to **31..**
Articles available on request only

90° ELBOW ADAPTER WITH DOUBLE SWIVEL NUT Thread Metric Parallel

Type: **3081..**

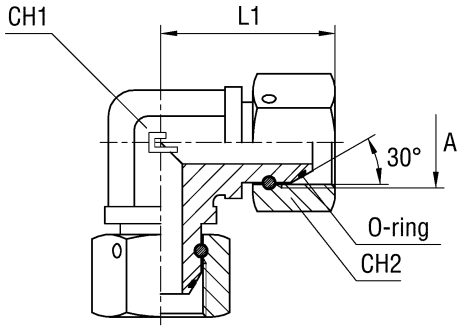

Serie	Bar	Ordering Body	A	L1	CH1	CH2
UNIVERSAL	400	308101	12x1,5	26	11	14
		308102	14x1,5	33	14	19
		308103	16x1,5	37	19	22
		308104	18x1,5	38	19	24
	350	308105	20x1,5	44	22	27
		308106	22x1,5	44	22	27
	315	308107	26x1,5	53	27	32
	250	308108	30x1,5	58	33	36

Note: If you wish to order a fitting in stainless steel, please change the first two digit from **30..** to **31..**
Articles available on request only

45° ELBOW ADAPTER WITH SWIVEL NUT Thread BSP Parallel

Type: **3082..**

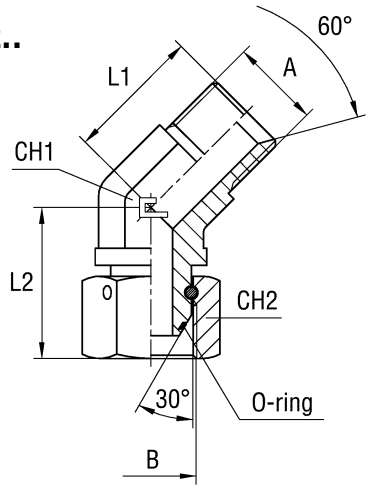

Serie	Bar	Ordering Body	A	B	L1	L2	CH1	CH2
UNIVERSAL	400	308201	1/8	1/8	20	23	11	14
		308202	1/4	1/4	21	25	14	19
		308203	3/8	3/8	23,5	29	19	22
	350	308204	1/2	1/2	26	32	22	27
		308205	5/8	5/8	29	39	27	30
	315	308206	3/4	3/4	32	41,5	27	32
	250	308207	1	1	37	45	33	41
	200	308208	1 1/4	1 1/4	39	47	41	50
	160	308209	1 1/2	1 1/2	46	58,5	48	55
	125	308210	2	2	58	72	65	70

Note: If you wish to order a fitting in stainless steel, please change the first two digit from **30..** to **31..**
Articles available on request only

45° ELBOW ADAPTER WITH SWIVEL NUT Thread Metric Parallel

Type: **3083..**

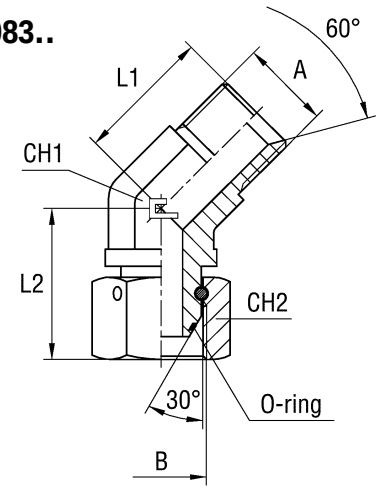

Serie	Bar	Ordering Body	A	B	L1	L2	CH1	CH2
UNIVERSAL	400	308301	12x1,5	12x1,5	18	24	11	14
		308302	14x1,5	14x1,5	21	25	14	19
		308303	16x1,5	16x1,5	25	29	19	22
		308304	18x1,5	18x1,5	28	30	19	24
	350	308305	20x1,5	20x1,5	30	33	22	27
		308306	22x1,5	22x1,5	30	33	22	27
	315	308307	26x1,5	26x1,5	33	41	27	32
	250	308308	30x1,5	30x1,5	37	42,5	33	36

Note: If you wish to order a fitting in stainless steel, please change the first two digit from **30..** to **31..**
Articles available on request only

90° ADJUSTABLE ADAPTER WITH SWIVEL NUT O-RING AND WASHER
Thread BSP Parallel

Type: **3084..**

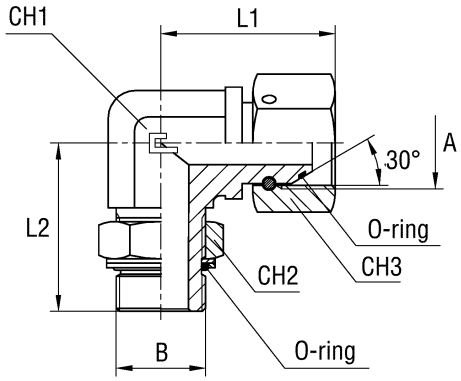

Serie	Bar	Ordering Body	A	B	L1	L2	CH1	CH2	CH3
UNIVERSAL	350	308401	1/8	1/8	25	26	11	14	14
		308402	1/4	1/8	33	30	14	14	19
	315	308403	1/4	1/4	33	32	14	19	19
		308404	3/8	1/4	37	37	19	19	22
	250	308405	3/8	3/8	37	37	19	22	22
		308406	1/2	3/8	43	39	22	22	27
		308407	1/2	1/2	43	43	22	30	27
		308408	3/4	1/2	53,5	47	27	30	32
		308409	3/4	3/4	53,5	49	27	36	32
		308410	1	3/4	60,5	50	33	36	41
	200	308411	1	1	60,5	52	33	46	41
		308412	1 1/4	1	64	58	41	46	50
		308413	1 1/4	1 1/4	64	58	41	50	50
	160	308414	1 1/2	1 1/4	72,5	59	48	50	55
		308415	1 1/2	1 1/2	72,5	60	48	55	55
	125	308416	2	1 1/2	91	74	65	55	70
		308417	2	2	91	74	65	70	70

Note: If you wish to order a fitting in stainless steel, please change the first two digit from **30..** to **31..**
Articles available on request only

90° ADJUSTABLE ADAPTER WITH SWIVEL NUT O-RING AND WASHER
Thread Metric Parallel

Type: **3085..**

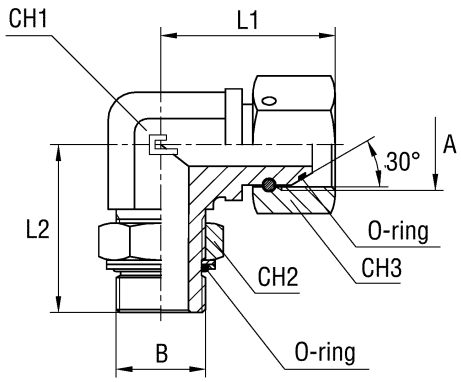

Serie	Bar	Ordering Body	A	B	L1	L2	CH1	CH2	CH3
UNIVERSAL	350	308501	12x1,5	10x1	26	27	11	14	14
	315	308502	12x1,5	12x1,5	26	31	14	17	14
		308503	14x1,5	12x1,5	33	31	14	17	19
		308504	14x1,5	14x1,5	33	33	14	19	19
		308505	16x1,5	14x1,5	37	36	19	19	22
		308506	16x1,5	16x1,5	37	38	19	22	22
		308507	18x1,5	16x1,5	38	38	19	22	24
		308508	18x1,5	18x1,5	38	38	19	24	24
		308509	22x1,5	18x1,5	44	40	22	24	27
	250	308510	22x1,5	22x1,5	44	42	22	27	27
		308511	26x1,5	22x1,5	53	46	27	27	32
		308512	26x1,5	27x2	53	50,5	27	32	32
		308513	30x1,5	27x2	58	52,5	33	32	36
	200	308514	30x1,5	33x2	58	52,5	33	41	36

Note: If you wish to order a fitting in stainless steel, please change the first two digit from **30..** to **31..**
Articles available on request only

45° ADJUSTABLE ADAPTER WITH SWIVEL NUT O-RING AND WASHER
Thread BSP Parallel

Type: **3086..**

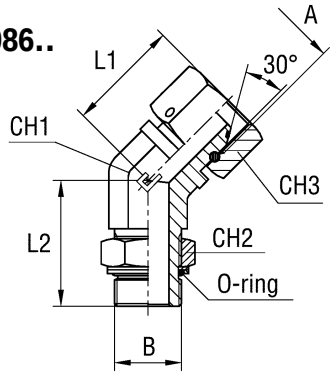

Serie	Bar	Ordering Body	A	B	L1	L2	CH1	CH2	CH3
UNIVERSAL	350	308601	1/8	1/8	23	26	11	14	14
		308602	1/4	1/8	25	27	14	14	19
	315	308603	1/4	1/4	25	29	14	19	19
		308604	3/8	1/4	29	30	19	19	22
	250	308605	3/8	3/8	29	33	19	22	22
		308606	1/2	3/8	32	35	22	22	27
		308607	1/2	1/2	32	38,5	22	30	27
		308608	3/4	1/2	41,5	38,5	27	30	32
		308609	3/4	3/4	41,5	44	27	36	32
		308610	1	3/4	45	44	33	36	41
	200	308611	1	1	45	47	33	46	41
		308612	1 1/4	1	47	45	41	46	50
		308613	1 1/4	1 1/4	47	48	41	50	50
	160	308614	1 1/2	1 1/4	58,5	48	48	50	55
		308615	1 1/2	1 1/2	58,5	48	48	55	55
	125	308616	2	1 1/2	72	57	65	55	70
		308617	2	2	72	57	65	70	70

Note: If you wish to order a fitting in stainless steel, please change the first two digit from **30..** to **31..**
Articles available on request only

45° ADJUSTABLE ADAPTER WITH SWIVEL NUT O-RING AND WASHER
Thread Metric Parallel

Type: **3087..**

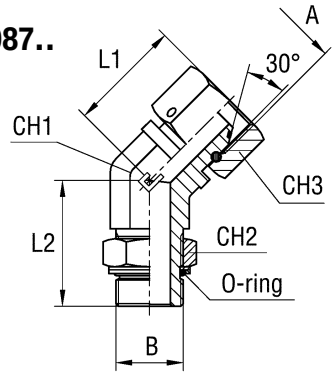

Serie	Bar	Ordering Body	A	B	L1	L2	CH1	CH2	CH3
UNIVERSAL	350	308701	12x1,5	10x1	24	27	11	14	14
	315	308702	12x1,5	12x1,5	24	27	14	17	14
		308703	14x1,5	12x1,5	25	27	14	17	19
		308704	14x1,5	14x1,5	25	33	14	19	19
		308705	16x1,5	14x1,5	29	30	19	19	22
		308706	16x1,5	16x1,5	29	33	19	22	22
		308707	18x1,5	16x1,5	30	33	19	22	24
		308708	18x1,5	18x1,5	30	33	19	24	24
		308709	22x1,5	18x1,5	33	36	22	24	27
	250	308710	22x1,5	22x1,5	33	38	22	27	27
		308711	26x1,5	22x1,5	41	37,5	27	27	32
		308712	26x1,5	27x2	41	46	27	32	32
		308713	30x1,5	27x2	42,5	46	33	32	36
	200	308714	30x1,5	33x2	42,5	46	33	41	36

Note: If you wish to order a fitting in stainless steel, please change the first two digit from **30..** to **31..**
Articles available on request only

LONG 90° ADJUSTABLE STUD ADAPTER WITH O-RING AND WASHER
Thread BSP Parallel

Type: **3088..**

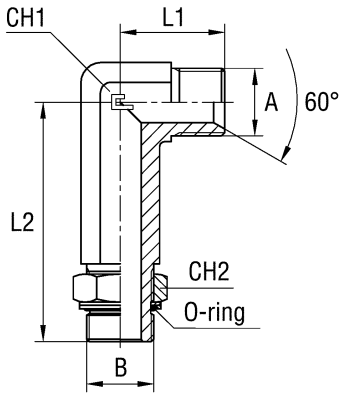

Serie	Bar	Ordering Body	A	B	L1	L2	CH1	CH2
UNIVERSAL	350	308801	1/8	1/8	21	46	11	14
		308802	1/4	1/8	26	49,5	14	14
	315	308803	1/4	1/4	26	56,5	14	19
		308804	3/8	1/4	29	66,5	19	19
	250	308805	3/8	3/8	29	67	19	22
		308806	1/2	3/8	34	74,5	22	22
		308807	1/2	1/2	34	78	22	30
		308808	3/4	1/2	41	88	27	30
		308809	3/4	3/4	41	92	27	36
		308810	1	3/4	45	104	33	36
	200	308811	1	1	45	105	33	46
		308812	1 1/4	1	52	124	41	46
		308813	1 1/4	1 1/4	52	124	41	50
	160	308814	1 1/2	1 1/4	59	135	48	50
		308815	1 1/2	1 1/2	59	135	48	55
	125	308816	2	1 1/2	78	146	65	55
		308817	2	2	78	146	65	70

Note: If you wish to order a fitting in stainless steel, please change the first two digit from **30..** to **31..**
Articles available on request only

LONG 90° ADJUSTABLE STUD ADAPTER WITH O-RING AND WASHER
Thread Metric Parallel

Type: **3089..**

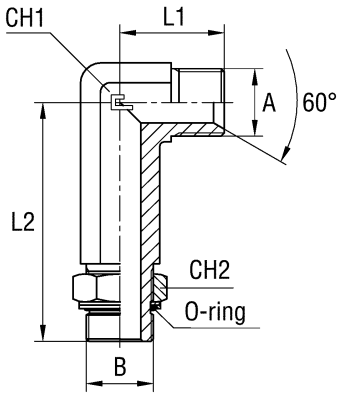

Serie	Bar	Ordering Body	A	B	L1	L2	CH1	CH2
UNIVERSAL	350	308901	10x1	12x1,5	21	46	11	14
	315	308902	12x1,5	12x1,5	21	56	14	17
		308903	12x1,5	14x1,5	21	56	14	17
		308904	14x1,5	14x1,5	26	56	14	19
		308905	14x1,5	16x1,5	29	64	19	19
		308906	16x1,5	16x1,5	29	67	19	22
		308907	16x1,5	18x1,5	29	67	19	22
		308908	18x1,5	18x1,5	29	67	19	24
		308909	18x1,5	22x1,5	34	75,5	22	24
	250	308910	22x1,5	22x1,5	34	78	22	27
		308911	22x1,5	26x1,5	41	93	27	27
		308912	27x2	26x1,5	41	95	27	32
		308913	27x2	30x1,5	45	105	33	32
	200	308914	33x2	30x1,5	45	105	33	41

Note: If you wish to order a fitting in stainless steel, please change the first two digit from **30..** to **31..**
Articles available on request only

MALE STUD COUPLING WITH SWIVEL NUT O-RING AND WASHER
Thread BSP Parallel - Thread Metric Parallel

Type: **2060..**
Type: **2061..**

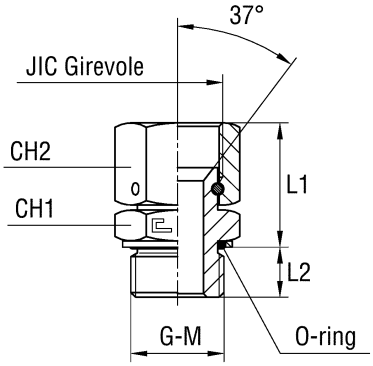

Serie	Bar	Ordering Body	JIC 37°	G	L1	L2	CH1	CH2
UNIVERSAL	350	206001	7/16-20	1/8	25,8	6,7	14	14
		206002	1/2-20	1/8	27,3	6,7	14	17
		206003	9/16-18	1/4	28,6	10,2	19	19
		206004	3/4-16	3/8	31,9	10,2	22	22
	315	206005	7/8-14	1/2	37,9	12,2	27	27
		206006	11/16-12	3/4	39	14,2	36	3
	280	206007	15/16-12	1	44,5	15,4	41	41
	240	206008	15/8-12	11/4	46,9	17,4	50	50
		206009	17/8-12	11/2	54,9	19,4	55	60
	350	206010	7/16-20	1/4	26,3	10,2	19	14
		206011	7/16-20	3/8	27,3	10,2	22	14
		206012	1/2-20	1/4	27,8	10,2	19	17
		206013	1/2-20	3/8	28,8	10,2	22	17
		206014	9/16-18	3/8	29,6	10,2	22	19
	315	206015	9/16-18	1/2	32,1	12,2	27	19
	350	206016	3/4-16	1/4	30,9	10,2	19	22
	315	206017	3/4-16	1/2	34,4	12,2	27	22
		206018	7/8-14	3/8	35,9	10,2	22	27
		206019	7/8-14	3/4	38,9	14,2	36	27
		206020	11/16-12	1/2	38	12,2	27	32
	280	206021	11/16-12	1	40,8	15,4	41	32
		206022	15/16-12	3/4	42,7	14,2	36	41
		206023	15/16-12	11/4	46,5	17,4	50	41
	240	206024	15/8-12	1	44,9	15,4	41	50
		206025	17/8-12	11/4	53,9	17,4	50	60

Note: If you wish to order a fitting in stainless steel, please change the first two digit from **20..** to **21..**
Articles available on request only

Serie	Bar	Ordering Body	JIC 37°	M	L1	L2	CH1	CH2
UNIVERSAL	350	206101	7/16-20	10x1	26	7,5	14	14
		206102	1/2-20	12x1,5	27,4	9,6	17	17
		206103	9/16-18	14x1,5	28,2	9,6	19	19
		206104	3/4-16	16x1,5	32,5	11,1	22	22
	315	206105	7/8-14	22x1,5	37,5	13,6	27	27
		206106	11/16-12	27x2	38,7	16,5	32	32
	280	206107	15/16-12	33x2	43,4	16,5	41	41
	240	206108	15/8-12	42x2	40,3	17	50	50
		206109	17/8-12	48x2	53,8	19,5	55	60
	350	206110	7/16-20	12x1,5	25,9	9,6	17	14
		203111	1/2-20	10x1	27,5	7,5	14	17
		206112	1/2-20	14x1,5	27,4	9,6	19	17
		206113	9/16-18	16x1,5	29,7	11,1	22	19
		206114	3/4-16	18x1,5	32,5	12,6	24	22
		206115	7/8-14	18x1,5	36,5	12,6	24	27
	315	206116	7/8-14	20x1,5	37,5	12,6	27	27
		206117	11/16-12	22x1,5	37,6	13,6	27	32
	280	206118	15/16-12	27x2	42,4	16,5	32	41

Note: If you wish to order a fitting in stainless steel, please change the first two digit from **20..** to **21..**
Articles available on request only

LONG MALE STUD STRAIGHT COUPLING WITH O-RING AND WASHER
Thread BSP Parallel - Thread Metric Parallel

Type: **2062..** With O-ring
Type: **2063..** With O-ring

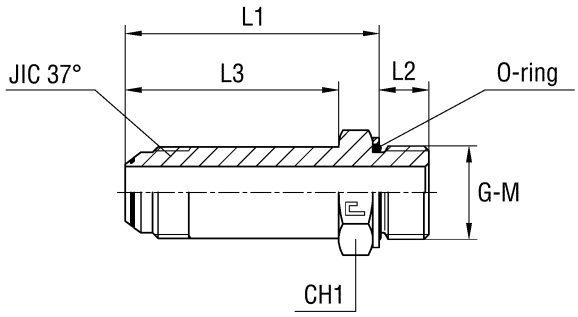

Type: **2062...3** Standard
Type: **2063...3** Standard

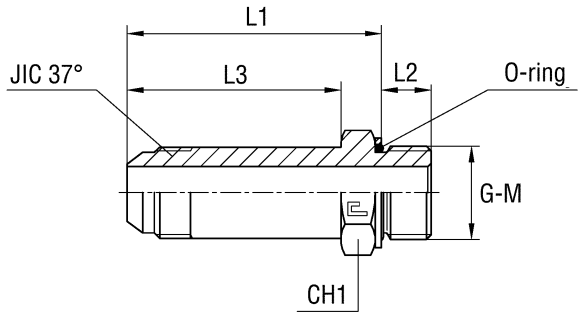

Serie	Bar	Ordering O-ring Body	Ø Tube M	Ø Tube W	G	L1	L2	CH1	CH2	JIC 37°	Ordering Standard Body
UNIVERSAL	350	206201	6	1/4	1/8	43,3	6,7	35	14	7/16-20	206201.3
		206202	8	5/16	1/8	45,3	6,7	37	14	1/2-20	206202.3
		206203	10	3/8	1/4	47,8	10,2	39	19	9/16-18	206203.3
		206204	12	1/2	3/8	57,8	10,2	48	22	3/4-16	206204.3
	315	206205	14-15-16	5/8	1/2	64,8	12,2	53	27	7/8-14	206205.3
		206206	18-20	3/4	3/4	75,8	14,2	63	36	11/16-12	206206.3
	280	206207	25	1	1	86,6	15,4	72	41	15/16-12	206207.3
	240	206208	30-32	1 1/4	1 1/4	104,6	17,4	88	50	15/8-12	206208.3
		206209	38	1 1/2	1 1/2	115,6	19,4	98	55	17/8-12	206209.3
	350	206210	6	1/4	1/4	43,8	10,2	35	19	7/16-20	206210.3
		206211	8	5/16	1/4	45,8	10,2	37	19	1/2-20	206211.3
		206212	8	5/16	3/8	46,8	10,2	37	22	1/2-20	206212.3
		206213	10	3/8	3/8	48,8	10,2	39	22	9/16-18	206213.3
	315	206214	10	3/8	1/2	50,8	12,2	39	27	9/16-18	206214.3
	350	206215	12	1/2	1/4	57,8	10,2	48	22	3/4-16	206215.3
	315	206216	12	1/2	1/2	59,8	12,2	48	27	3/4-16	206216.3
	350	206217	14-15-16	5/8	3/8	63,8	10,2	53	24	7/8-14	206217.3
	315	206218	14-15-16	5/8	3/4	65,8	14,2	53	36	7/8-14	206218.3
		206219	18-20	3/4	1/2	74,8	12,2	63	30	11/16-12	206219.3
	280	206220	18-20	3/4	1	77,6	15,4	63	41	11/16-12	206220.3
	290	206221	25	1	3/4	84,8	14,2	72	36	15/16-12	206221.3
	240	206222	25	1	1 1/4	88,6	17,4	72	50	15/16-12	206222.3
		206223	30-32	1 1/4	1	103,6	15,4	88	46	15/8-12	206223.3
		206224	38	1 1/2	1 1/4	114,6	17,4	98	50	17/8-12	206224.3

Note: If you wish to order a fitting in stainless steel, please change the first two digit from **20..** to **21..**
Articles available on request only

Serie	Bar	Ordering O-ring Body	Ø Tube M	Ø Tube W	M	L1	L2	CH1	CH2	JIC 37°	Ordering Standard Body
UNIVERSAL	350	206301	6	1/4	10x1	43,5	7,5	35	14	7/16-20	206301.3
		206302	8	5/16	12x1,5	45,4	9,6	37	17	1/2-20	206302.3
		206303	10	3/8	14x1,5	47,4	9,6	39	19	9/16-18	206303.3
		206304	12	1/2	16x1,5	57,9	11,1	48	22	3/4-16	206304.3
	315	206305	14-15-16	5/8	22x1,5	64,4	13,6	53	27	7/8-14	206305.3
		206306	18-20	3/4	27x2	75,5	16,5	63	32	11/16-12	206306.3
	280	206307	25	1	33x2	85,5	16,5	72	41	15/16-12	206307.3
	240	206308	30-32	1 1/4	42x2	104	17	88	50	15/8-12	206308.3
		206309	38	1 1/2	48x2	114,5	19,5	98	55	17/8-12	206309.3
	350	206310	8	5/16	10x1	45,5	7,5	37	14	1/2-20	206310.3
		206311	8	5/16	14x1,5	45,4	9,6	37	19	1/2-20	206311.3
		206312	10	3/8	16x1,5	48,9	11,1	39	22	9/16-18	206312.3
		206313	12	1/2	18x1,5	58,4	12,6	48	24	3/4-16	206313.3
		206314	14-15-16	5/8	18x1,5	63,4	12,6	53	24	7/8-14	206314.3
	315	206315	14-15-16	5/8	20x1,5	63,4	12,6	53	27	7/8-14	206315.3
		206316	18-20	3/4	22x1,5	74,4	13,6	63	27	11/16-12	206316.3
	280	206317	25	1	27x2	84,5	16,5	72	36	15/16-12	206317.3

Note: If you wish to order a fitting in stainless steel, please change the first two digit from **20..** to **21..**
Articles available on request only

LONG MALE STUD STRAIGHT COUPLING WITH O-RING Thread UNF/UN-2A

Type: **2064..** With O-ring

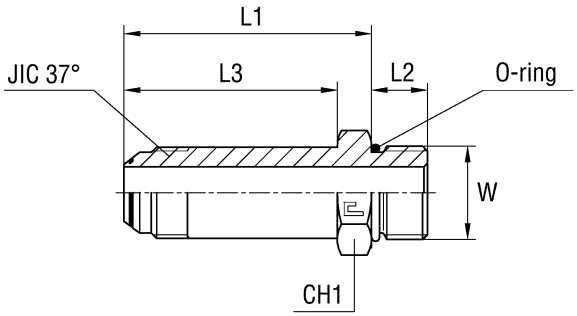

Type: **2064...3** Standard

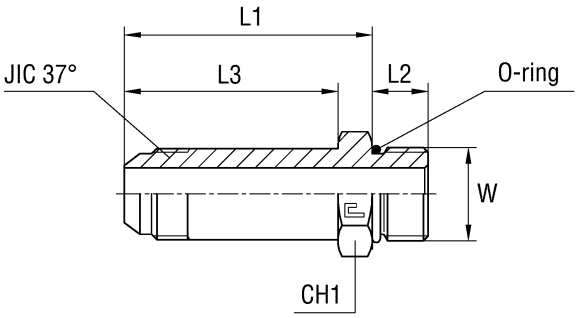

Serie	Bar	Ordering O-ring Body	Ø Tube M	Ø Tube W	W	L1	L2	L3	CH1	JIC 37°	Ordering Standard Body
UNIVERSAL	400	206401	6	1/4	7/16-20	42,9	9,1	35	14	7/16-20	206401.3
		206402	8	5/16	1/2-20	44,9	9,1	37	17	1/2-20	206402.3
	350	206403	10	3/8	9/16-18	48	10	39	17	9/16-18	206403.3
		206404	12	1/2	3/4-16	57,9	11,1	48	22	3/4-16	206404.3
		206405	14-15-16	5/8	7/8-14	66,3	12,7	53	27	7/8-14	206405.3
		206406	18-20	3/4	11/16-12	75,9	15,1	63	32	11/16-12	206406.3
	290	206407	25	1	15/16-12	85,4	15,1	72	41	15/16-12	206407.3
	240	206408	30-32	1 1/4	15/8-12	103,9	15,1	88	50	15/8-12	206408.3
		206409	38	1 1/2	17/8-12	114,9	15,1	98	55	17/8-12	206409.3
	400	206410	6	1/4	1/2-20	42,9	9,1	35	17	7/16-20	206410.3
	350	206411	6	1/4	9/16-18	43	10	35	17	7/16-20	206411.3
		206412	10	3/8	3/4-16	48,9	11,1	39	22	9/16-18	206412.3
		206413	12	1/2	7/8-14	59,3	12,7	48	27	3/4-16	206413.3
		206414	12	1/2	11/16-12	60,9	15,1	48	32	3/4-16	206414.3
		206415	14-15-16	5/8	3/4-16	63,9	11,1	48	24	7/8-14	206415.3
		206416	14-15-16	5/8	11/16-12	65,9	15,1	53	32	7/8-14	206416.3
		206417	18-20	3/4	3/4-16	74,9	11,1	53	30	11/16-12	206417.3
		206418	18-20	3/4	7/8-14	75,3	12,7	63	30	11/16-12	206418.3
	290	206419	18-20	3/4	15/16-12	76,9	15,1	63	41	11/16-12	206419.3
		206420	25	1	11/16-12	84,9	15,1	72	36	15/16-12	206420.3
	240	206421	25	1	15/8-12	87,9	15,1	72	50	15/16-12	206421.3

Note: If you wish to order a fitting in stainless steel, please change the first two digit from **20..** to **21..**
Articles available on request only

LONG MALE STUD ELBOW COUPLING WITH O-RING AND WASHER
Thread BSP Parallel

Type: **2065..** With O-ring

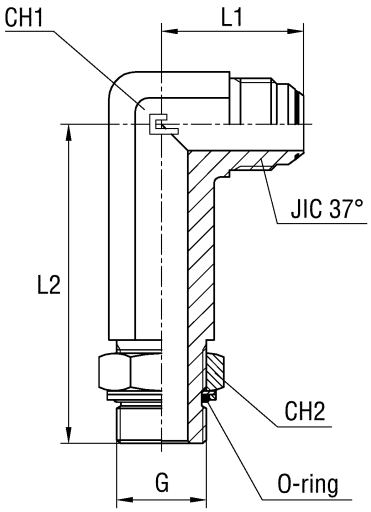

Type: **2065...3** Standard

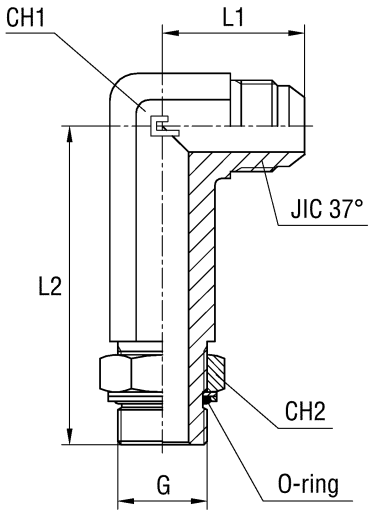

Serie	Bar	Ordering O-ring Body	Ø Tube M	Ø Tube W	G	L1	L2	CH1	CH2	JIC 37°	Ordering Standard Body
UNIVERSAL	350	206501	6	1/4	1/8	23	46	11	14	7/16-20	206501.3
	315	206502	8	5/16	1/4	24	56,5	14	19	1/2-20	206502.3
		206503	10	3/8	1/4	27,5	56,5	14	19	9/16-18	206503.3
	250	206504	12	1/2	3/8	32	67	19	22	3/4-16	206504.3
		206505	14-15-16	5/8	1/2	37	78	22	27	7/8-14	206505.3
		206506	18-20	3/4	3/4	42	92	27	36	11/16-12	206506.3
	200	206507	25	1	1	46	105	33	41	15/16-12	206507.3
		206508	30-32	1 1/4	1 1/4	53	124	41	50	1 5/8-12	206508.3
	160	206509	38	1 1/2	1 1/2	59	135	48	55	1 7/8-12	206509.3
	315	206510	6	1/4	1/4	24	56,5	14	19	7/16-20	206510.3
	250	206511	6	1/4	3/8	29	67	19	22	7/16-20	206511.3
		206512	6	1/4	1/2	31	78	22	27	7/16-20	206512.3
	350	206513	8	5/16	1/8	24	49,5	14	14	1/2-20	206513.3
	250	206514	8	5/16	3/8	29	67	19	22	1/2-20	206514.3
		206515	10	3/8	3/8	29,5	67	19	22	9/16-18	206515.3
		206516	10	3/8	1/2	31,5	78	22	27	9/16-18	206516.3
	315	206517	12	1/2	1/4	32	66,5	19	19	3/4-16	206517.3
	250	206518	12	1/2	1/2	34	78	22	27	3/4-16	206518.3
		206519	12	1/2	3/4	36	92	27	36	3/4-16	206519.3
		206520	14-15-16	5/8	3/8	37	74,5	22	22	7/8-14	206520.3
		206521	14-15-16	5/8	3/4	39	92	27	36	7/8-14	206521.3
		206522	18-20	3/4	1/2	42	88	27	27	11/16-12	206522.3
	200	206523	18-20	3/4	1	45	105	33	41	11/16-12	206523.3
	250	206524	25	1	3/4	46	104	33	36	15/16-12	206524.3
	200	206525	25	1	1 1/4	52	124	41	50	15/16-12	206525.3
		206526	30-32	1 1/4	1	53	124	41	41	1 5/8-12	206526.3
		206527	38	1 1/2	1 1/4	59	135	48	50	1 7/8-12	206527.3

Note: If you wish to order a fitting in stainless steel, please change the first two digit from **20..** to **21..**
Articles available on request only.

LONG MALE STUD ELBOW COUPLING WITH O-RING AND WASHER
Thread Metric Parallel

Type: **2066..** With O-ring

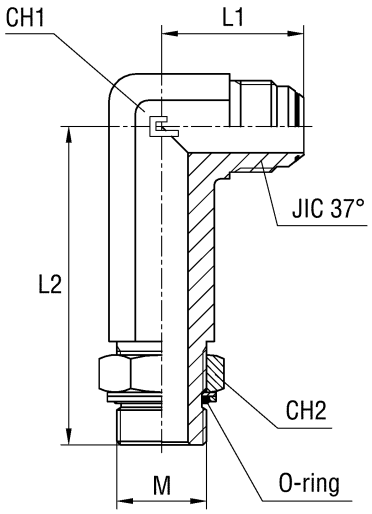

Type: **2066...3** Standard

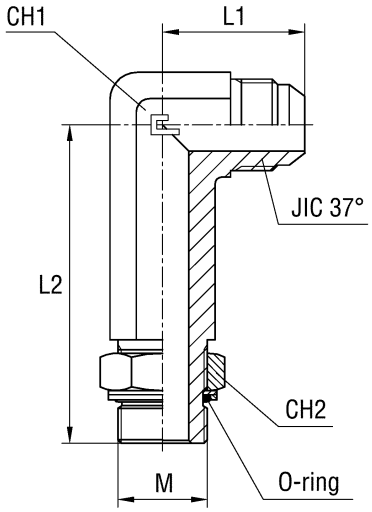

Serie	Bar	Ordering O-ring Body	Ø Tube M	Ø Tube W	M	L1	L2	L3	CH2	JIC 37°	Ordering Standard Body
UNIVERSAL	350	206601	6	1/4	10x1	23	46	11	14	7/16-20	206601.3
	315	206602	8	5/16	12x1,5	24	53,5	14	17	1/2-20	206602.3
		206603	10	3/8	14x1,5	27,5	56	14	19	9/16-18	206603.3
		206604	12	1/2	16x1,5	32	67	19	22	3/4-16	206604.3
	250	206605	14-15-16	5/8	22x1,5	37	78	22	27	7/8-14	206605.3
		206606	18-20	3/4	27x2	42	95	27	32	1 1/16-12	206606.3
	200	206607	25	1	33x2	46	105	33	41	1 5/16-12	206607.3
		206608	30-32	1 1/4	42x2	53	124	41	50	1 5/8-12	206608.3
	160	206609	38	1 1/2	48x2	59	137	48	55	1 7/8-12	206609.3
	315	206610	6	1/4	12x1,5	24	53,5	14	17	7/16-20	206610.3
	350	206611	8	5/16	10x1	24	49,5	14	14	1/2-20	206611.3
	315	206612	8	5/16	14x1,5	24	56	14	19	1/2-20	206612.3
		206613	10	3/8	16x1,5	29,5	67	19	22	9/16-18	206613.3
		206614	12	1/2	18x1,5	32	67	22	24	3/4-16	206614.3
		206615	14-15-16	5/8	18x1,5	37	75,5	22	24	7/8-14	206615.3
	250	206616	14-15-16	5/8	20x1,5	37	78	22	27	7/8-14	206616.3
		206617	20	3/4	22x1,5	42	88	27	27	1 1/16-12	206617.3
		206618	25	1	27x2	46	105	33	32	1 5/16-12	206618.3

Note: If you wish to order a fitting in stainless steel, please change the first two digit from **20..** to **21..**
Articles available on request only

LONG MALE STUD ELBOW COUPLING WITH O-RING
Thread UNF/UN-2A

Type: **2067..** With O-ring

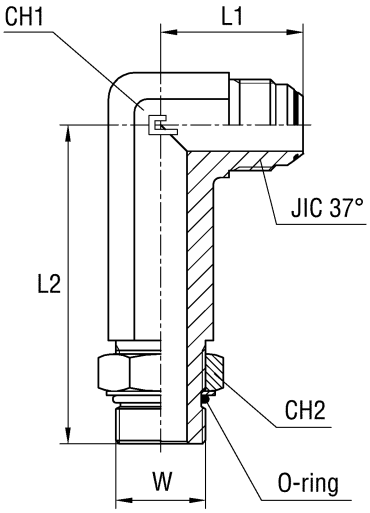

Type: **2067...3** Standard

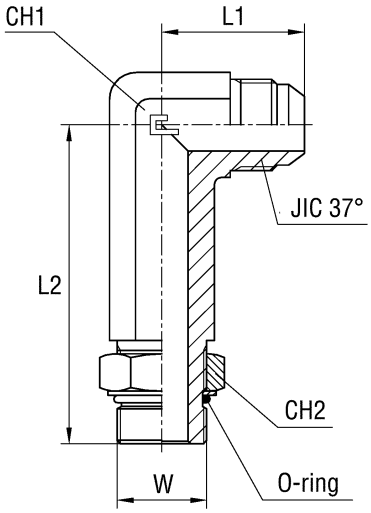

Serie	Bar	Ordering O-ring Body	Ø Tube M	Ø Tube W	W	L1	L2	CH1	CH2	JIC 37°	Ordering Standard Body
UNIVERSAL	400	206701	6	1/4	7/16-20	23	46	11	14	7/16-20	206701.3
		206702	8	5/16	1/2-20	24	49,5	14	17	1/2-20	206702.3
	350	206703	10	3/8	9/16-18	27,5	56,5	14	17	9/16-18	206703.3
		206704	12	1/2	3/4-16	32	67	19	22	3/4-16	206704.3
		206705	14-15-16	5/8	7/8-14	37	78	22	27	7/8-14	206705.3
		206706	18-20	3/4	11/16-12	42	92	27	32	11/16-12	206706.3
	290	206707	25	1	15/16-12	46	105	33	41	15/16-12	206707.3
	240	206708	30-32	11/4	15/8-12	53	124	41	50	15/8-12	206708.3
		206709	38	11/2	17/8-12	59	135	48	55	17/8-12	206709.3
	400	206710	6	1/4	1/2-20	24	49,5	14	17	7/16-20	206710.3
	350	206711	6	1/4	9/16-18	24	56,5	14	17	7/16-20	206711.3
		206712	10	3/8	3/4-16	29,5	67	19	22	9/16-18	206712.3
		206713	12	1/2	7/8-14	34	78	22	27	3/4-16	206713.3
		206714	12	1/2	11/16-12	36	92	27	32	3/4-16	206714.3
		206715	14-15-16	5/8	3/4-16	37	74,5	22	22	7/8-14	206715.3
		206716	14-15-16	5/8	11/16-12	39	92	27	32	7/8-14	206716.3
		206717	18-20	3/4	3/4-16	42	84,5	27	22	11/16-12	206717.3
		206718	18-20	3/4	7/8-14	42	88	27	27	11/16-12	206718.3
	290	206719	18-20	3/4	15/16-12	45	105	33	41	11/16-12	206719.3
		206720	25	1	11/16-12	46	105	33	32	15/16-12	206720.3
	240	206721	25	1	15/8-12	52	124	41	50	15/16-12	206721.3

Note: If you wish to order a fitting in stainless steel, please change the first two digit from **20..** to **21..**
Articles available on request only

LONG MALE STUD ELBOW COUPLING

Type: **2068..** With O-ring

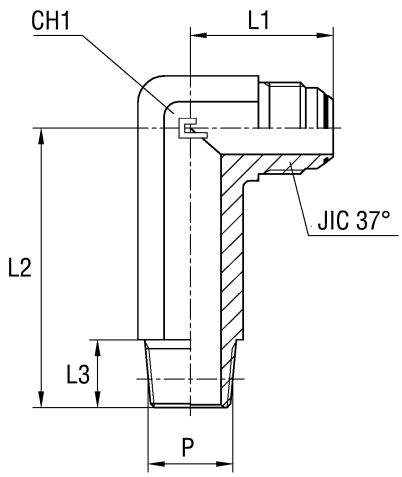

Type: **2068...3** Standard

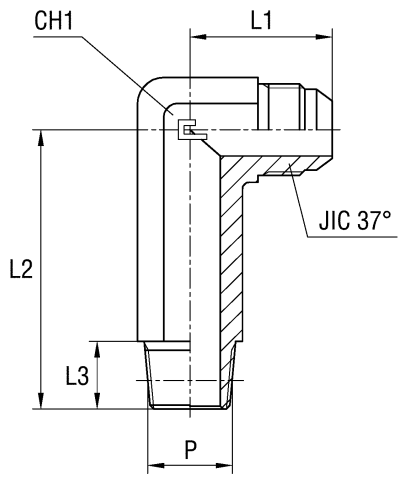

Serie	Bar	Ordering O-ring Body	Ø Tube M	Ø Tube W	P	L1	L2	CH1	CH2	JIC 37°	Ordering Standard Body
UNIVERSAL	350	206801	6	1/4	1/8	23	39,5	10	11	7/16-20	206801.3
		206802	8	5/16	1/8	24	41,5	10	14	1/2-20	206802.3
		206803	10	3/8	1/4	27,5	52,5	14,5	14	9/16-18	206803.3
		206804	12	1/2	3/8	32	61	14,5	19	3/4-16	206804.3
		206805	14-15-16	5/8	1/2	37	73	19	22	7/8-14	206805.3
		206806	18-20	3/4	3/4	42	82,5	19	27	11/16-12	206806.3
	290	206807	25	1	1	46	103	24	33	15/16-12	206807.3
	240	206808	30-32	1 1/4	1 1/4	53	127	25	41	15/8-12	206808.3
		206809	38	1 1/2	1 1/2	59	141	26	48	17/8-12	206809.3
	350	206810	6	1/4	1/4	24	52,5	14,5	14	7/16-20	206810.3
		206811	8	5/16	1/4	24	52,5	14,5	14	1/2-20	206811.3
		206812	10	3/8	1/8	27,5	48,5	10	14	9/16-18	206812.3
		20681 3	10	3/8	3/8	29,5	61	14,5	19	9/16-18	206813.3
		206814	10	3/8	1/2	31,5	73	19	22	9/16-18	206814.3
		206815	12	1/2	1/4	32	61	14,5	19	3/4-16	206815.3
		206816	12	1/2	1/2	34	73	19	22	3/4-16	206816.3
		206817	12	1/2	3/4	36	82,5	19	27	3/4-16	206817.3
		206818	14-15-16	5/8	3/8	37	68,5	14,5	22	7/8-14	206818.3
		206819	14-15-16	5/8	3/4	39	82,5	19	27	7/8-14	206819.3
		206820	18-20	3/4	1/2	42	82,5	19	27	11/16-12	206820.3
	290	206821	25	1	3/4	46	98	19	33	15/16-12	206821.3
	240	206822	30-32	1 1/4	1	53	127	24	41	15/8-12	206822.3

Note: If you wish to order a fitting in stainless steel, please change the first two digit from **20..** to **21..**
Articles available on request only

FEMALE STRAIGHT WELDING COUPLING

Type: **2069..** With O-ring (Delivered unassembled)

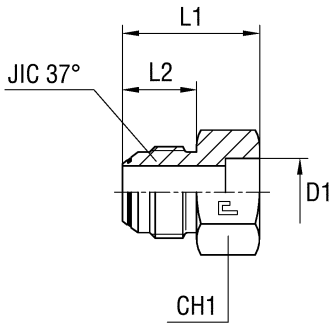

Type: **2069...3** Standard

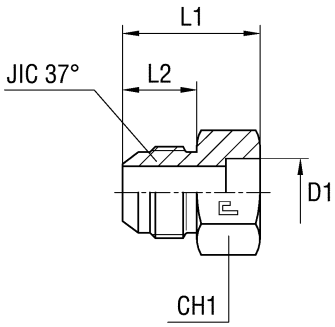

Serie	Bar	Ordering O-ring Body	Ø Tube M	Ø Tube W	D1	L1	L2	CH1	JIC 37°	Ordering Standard Body
UNIVERSAL	450	206901	6	1/4	6	26	14	12	7/16-20	206901.3
		206902	8	5/16	10	26	14	14	1/2-20	206902.3
	350	206903	10	3/8	10	27,5	14,1	17	9/16-18	206903.3
		206904	12	1/2	12	29	16,7	22	3/4-16	206904.3
		206905	14-15-16	5/8	16	31,5	19,3	24	7/8-14	206905.3
		206906	18-20	3/4	20	40	21,9	30	11/16-12	206906.3
	290	206907	25	1	25	42	23,1	36	15/16-12	206907.3
	240	206908	30-32	11/4	32	45	24,3	46	15/8-12	206908.3
		206909	38	11/2	38	50	27,5	50	17/8-12	206909.3
	350	206910	10	3/8	12	27,5	14,1	17	9/16-18	206910.3
		206911	12	1/2	16	29	16,7	22	3/4-16	206911.3
		206912	12	1/2	18	29	16,7	22	3/4-16	206912.3
		206913	14-15-16	5/8	18	31,5	19,3	24	7/8-14	206913.3
		206914	14-15-16	5/8	22	36,5	19,3	27	7/8-14	206914.3
		206915	18-20	3/4	18	40	21,9	30	11/16-12	206915.3
		206916	18-20	3/4	25	40	21,9	36	11/16-12	206916.3
	290	206917	25	1	27	42	23,1	36	15/16-12	206917.3
		206918	25	1	32	42,5	23,1	41	15/16-12	206918.3
	240	206919	30-32	11/4	38	45	24,3	50	15/8-12	206919.3

Note: If you wish to order a fitting in stainless steel, please change the first two digit from **20..** to **21..**
Articles available on request only

MALE WELDING ELBOW

Type: **2070..** With O-ring (Delivered unassembled)

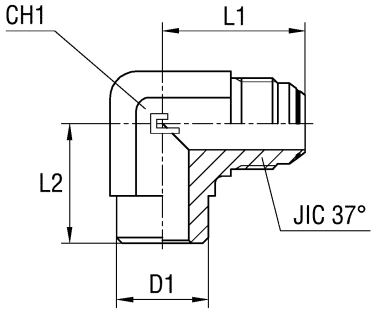

Type: **2070...3** Standard

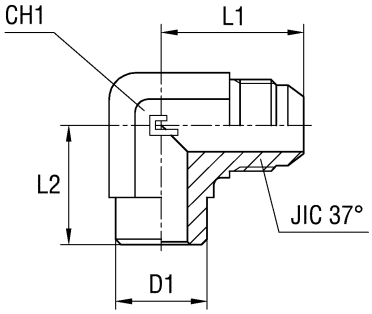

Serie	Bar	Ordering O-ring Body	Ø Tube M	Ø Tube W	D1	L1	L2	CH1	JIC 37°	Ordering Standard Body
UNIVERSAL	450	207001	6	1/4	15	31	22,5	14	7/16-20	207001.3
		207002	8	5/16	15	31	22,5	14	1/2-20	207002.3
	350	207003	10	3/8	15	31	22,5	14	9/16-18	207003.3
		207004	12	1/2	20	36	26	19	3/4-16	207004.3
		207005	14-15-16	5/8	23	41,5	31	22	7/8-14	207005.3
		207006	18-20	3/4	28	48	34,5	27	11/16-12	207006.3
	290	207007	25	1	35	52	41	33	15/16-12	207007.3
	240	207008	30-32	11/4	42	59	43	41	15/8-12	207008.3
		207009	38	11/2	50	66	53	48	17/8-12	207009.3
	450	207010	8	5/16	16	27	16	14	1/2-20	207010.3
	350	207011	10	3/8	16	27	16	14	9/16-18	207011.3
		207012	10	3/8	22	29	18	19	9/16-18	207012.3
		207013	12	1/2	22	31,5	18	19	3/4-16	207013.3
		207014	12	1/2	18	34	20	22	3/4-16	207014.3
		207015	14-15-16	5/8	22	36,5	20	22	7/8-14	207015.3
		207016	14-15-16	5/8	27	40	23	27	7/8-14	207016.3

Note: If you wish to order a fitting in stainless steel, please change the first two digit from **20..** to **21..**
Articles available on request only.

FEMALE WELDING ELBOW

Type: **2071..** With O-ring (Delivered unassembled)

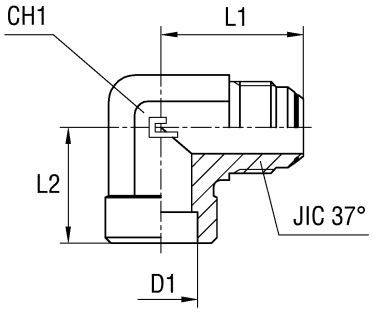

Type: **2071...3** Standard

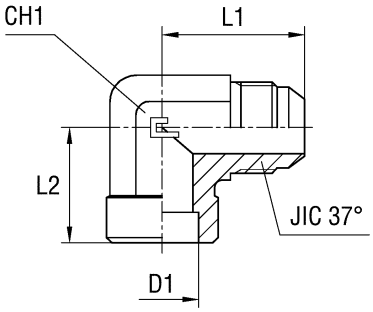

Serie	Bar	Ordering O-ring Body	Ø Tube M	Ø Tube W	D1	L1	L2	CH1	JIC 37°	Ordering Standard Body
UNIVERSAL	450	207101	6	1/4	6	23	10	11	7/16-20	207101.3
		207102	8	5/16	10	27	16	14	1/2-20	207102.3
	350	207103	10	3/8	10	27,5	16	14	9/16-18	207103.3
		207104	12	1/2	12	32	18	19	3/4-16	207104.3
		207105	14-15-16	5/8	16	37	20	22	7/8-14	207105.3
		207106	18-20	3/4	20	42	23	27	11/16-12	207106.3
	290	207107	25	1	25	46	26	33	15/16-12	207107.3
	240	207108	30-32	11/4	32	53	33	41	15/8-12	207108.3
		207109	38	11/2	38	59	35	48	17/8-12	207109.3
	350	207110	10	3/8	12	29,5	18	19	9/16-18	207110.3
		207111	12	1/2	16	34	20	22	3/4-16	207111.3
		207112	14-15-16	5/8	14	37	20	22	7/8-14	207112.3
		207113	14-15-16	5/8	18	40	23	27	7/8-14	207113.3
		207114	14-15-16	5/8	22	40	23	27	7/8-14	207114.3
		207115	18-20	3/4	18	42	23	27	11/16-12	207115.3
		207116	18-20	3/4	25	46	26	33	11/16-12	207116.3
	290	207117	25	1	32	51	33	41	15/16-12	207117.3
	240	207118	30-32	11/4	30	53	33	41	15/8-12	207118.3
		207119	30-32	11/2	38	56	35	48	15/8-12	207119.3

Note: If you wish to order a fitting in stainless steel, please change the first two digit from **20..** to **21..**
Articles available on request only

BULKHEAD BARREL TEE

Type: **2072..** With O-ring

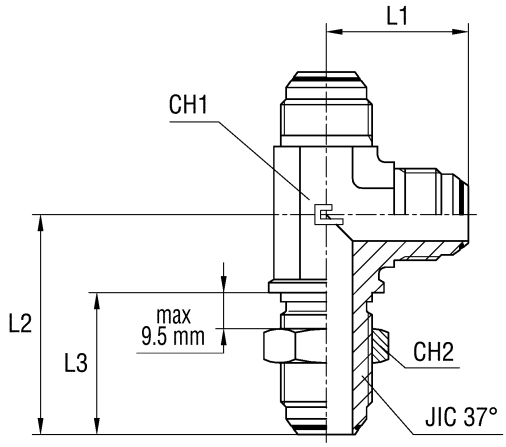

Type: **2072...3** Standard

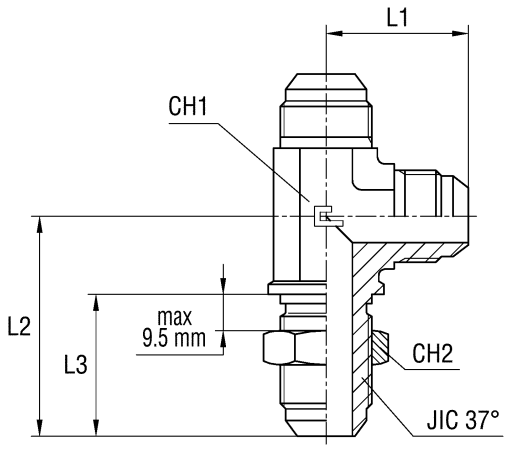

Serie	Bar	Ordering O-ring Body	Ø Tube M	Ø Tube W	L1	L2	L3	CH1	CH2	JIC 37°	Ordering Standard Body
UNIVERSAL	450	207201	6	1/4	24,5	40,5	28,3	11	17	7/16-20	207201.3
		207202	8	5/16	27	43,5	28,3	14	19	1/2-20	207202.3
	350	207203	10	3/8	27,5	46	30,1	14	22	9/16-18	207203.3
		207204	12	1/2	34,5	53,5	35	19	24	3/4-16	207204.3
		207205	16	5/8	39,5	60,5	38,5	22	30	7/8-14	207205.3
		207206	20	3/4	45	68	42,8	27	36	11/16-12	207206.3
	290	207207	25	1	49,5	71	42,8	33	41	15/16-12	207207.3
	240	207208	32	1 1/4	55	79	44,1	41	50	1 5/8-12	207208.3
		207209	38	1 1/2	59,5	87	44,3	48	55	1 7/8-12	207209.3

Note: If you wish to order a fitting in stainless steel, please change the first two digit from **20..** to **21..**
Articles available on request only

FEMALE PLUG

Type: **2073..**

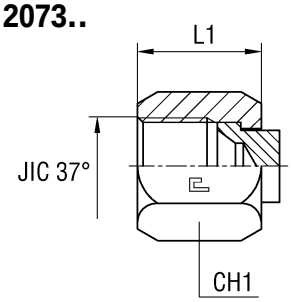

Serie	Bar	Ordering Complete	W	L1	CH1
UNIVERSAL	450	207301	7/16-20	15,5	14
		207302	1/2-20	17	17
	350	207303	9/16-18	18,3	19
		207304	3/4-16	21,3	22
		207305	7/8-14	24,6	27
		207306	11/16-12	25,9	32
	290	207307	15/16-12	28,4	41
	240	207308	1 5/8-12	31	50
		207309	1 7/8-12	35,8	60

Note: If you wish to order a fitting in stainless steel, please change the first two digit from **20..** to **21..**

TUBE PLUG

Type: **2074..** With O-ring

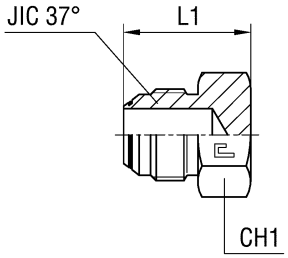

Type: **2074...3** Standard

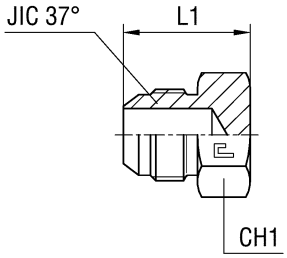

Serie	Bar	Ordering O-ring Body	Ø Tube M	Ø Tube W	L1	CH1	JIC 37°	Ordering Standard Body
UNIVERSAL	450	207401	6	1/4	20,5	12	7/16-20	207401.3
		207402	8	5/16	20,5	14	1/2-20	207402.3
	350	207403	10	3/8	21,5	17	9/16-18	207403.3
		207404	12	1/2	24	22	3/4-16	207404.3
		207405	14-15-16	5/8	28	24	7/8-14	207405.3
		207406	18-20	3/4	32	30	11/16-12	207406.3
	290	207407	25	1	34	36	15/16-12	207407.3
	240	207408	30-32	11/4	37	46	15/8-12	207408.3
		207409	38	11/2	42	50	17/8-12	207409.3

Note: If you wish to order a fitting in stainless steel, please change the first two digit from **20..** to **21..**

CLOSURE PLUG WITH EXAGON SOCKET HEAD WITH O-RING Thread UNF/UN-2A

Type: **2075..**

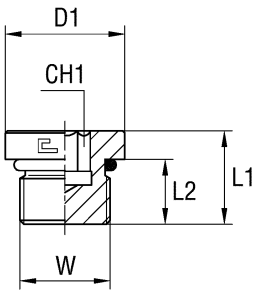

Serie	Bar	Ordering Complete	W	D1	L1	L2	CH1
UNIVERSAL	450	207501	7/16-20	14	12	9,1	4,78
		207502	1/2-20	16	12	9,1	4,78
	350	207503	9/16-18	17,5	12,7	10	6,35
		207504	3/4-16	22	14,8	11,1	7,95
		207505	7/8-14	25,5	16,5	12,7	9,52
		207506	11/16-12	32	19,5	15,1	14,3
	290	207507	15/16-12	38	19,5	15,1	15,88
	240	207508	15/8-12	48	19,5	15,1	19,05
		207509	17/8-12	54	19,5	15,1	19,05

Note: If you wish to order a fitting in stainless steel, please change the first two digit from **20..** to **21..**
Articles available on request only

Exagonal Nut Thread UNF/UN-2A

Type: **2076..**

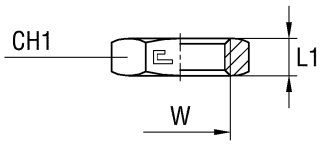

Serie	Bar	Ordering Complete	W	L1	CH1
UNIVERSAL	450	207601	7/16-20	7,1	17
		207602	1/2-20	7,1	19
	350	207603	9/16-18	7,1	22
		207604	3/4-16	7,9	24
		207605	7/8-14	9,1	30
		207606	11/16-12	10,4	36
	290	207607	15/16-12	10,4	41
	240	207608	15/8-12	10,4	50
		207609	17/8-12	10,4	55

Note: If you wish to order a fitting in stainless steel, please change the first two digit from **20..** to **21..**

ASSEMBLY TOOLS SERIE SAE J514

SWAGING MACHINE		METRIC		INCHES	
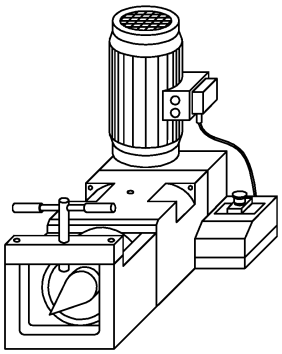		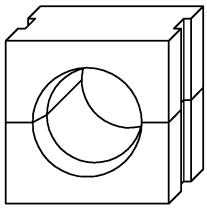		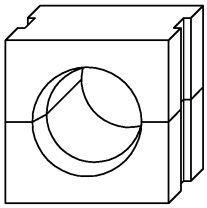	
Serie	**Ordering Maccchine**	**ØTube**	**Ordering Metric**	**ØTube**	**Ordering Inches**
UNIVERSAL	200000	6	200001	1/4	200021
		8	200002	5/16	200022
		10	200003	3/8	200023
		12	200004	1/2	200024
		16	200005	5/8	200025
		20	200006	3/4	200026
		25	200007	1	200027
		32	200008	1 1/4	200028
		38	200009	1 1/2	200029
		14	200010		
		15	200011		
		18	200012		
		30	200013		

EQUAL NON RETURN VALVE

Type: **5001…1** Only Body

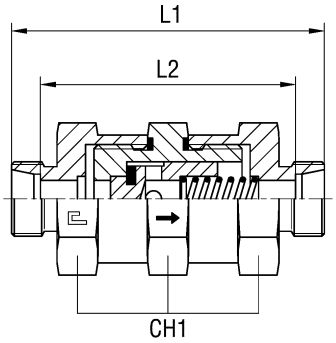

Type: **5001..** B3 Ring

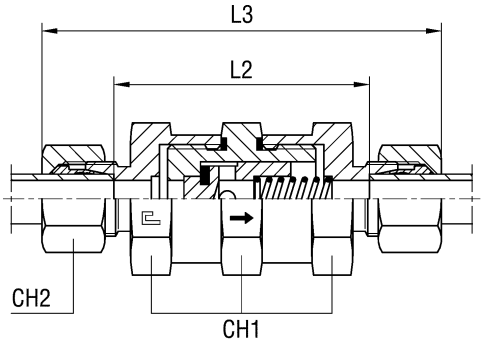

Type: **5001…4** B4 Ring

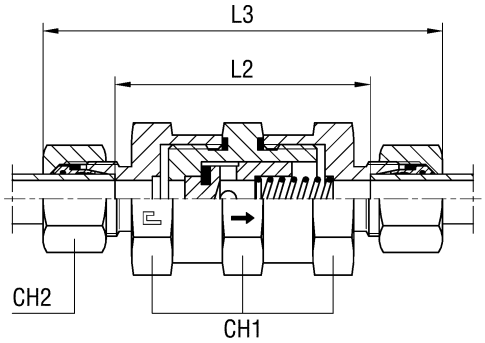

Serie	Bar	Ordering Body	Ordering Equipped B3	Ø Tube	L1	L2	L3	CH1	CH2	Ø pass.	Ordering Equipped B4
L	250	500104.1	500104	6	68	54	83	19	14	4	500104.4
		500105.1	500105	8	68	54	83	19	17	4	500105.4
		500106.1	500106	10	70	56	85	19	19	4	500106.4
		500107.1	500107	12	76	62	91	32	22	8	500107.4
		500108.1	500108	15	81	67	97	41	27	11	500108.4
	160	500109.1	500109	18	81	66	98	41	32	11	500109.4
		500110.1	500110	22	94	79	111	50	36	18	500110.4
	100	500111.1	500111	28	94	79	112	50	41	18	500111.4
		500112.1	500112	35	116	95	138	70	50	29	500112.4
		500113.1	500113	42	116	94	139	70	60	29	500113.4
S	400	500114.1	500114	6	72	58	87	19	17	4	500114.4
		500115.1	500115	8	72	58	87	19	19	4	500115.4
		500116.1	500116	10	78	63	95	32	22	7	500116.4
		500117.1	500117	12	78	63	95	32	24	8	500117.4
		500118.1	500118	14	85	69	104	41	27	10	500118.4
		500119.1	500119	16	85	68	104	41	30	11	500119.4
		500120.1	500120	20	98	77	120	50	36	16	500120.4
	250	500121.1	500121	25	102	78	126	50	46	18	500121.4
		500122.1	500122	30	124	97	150	70	50	25	500122.4
		500123.1	500123	38	128	96	157	70	60	29	500123.4

Note: If you wish to order a fitting in stainless steel, please change the first two digit from **50..** to **51..**

MALE STUD NON RETURN VALVE WITH ELASTOMER SEAL
Thread BSP Parallel - Thread Metric Parallel

Tipe: **5002...1** Only Body
Tipe: **5003...1** Only Body

Tipe: **5002..** B3 Ring
Tipe: **5003..** B3 Ring

Type: **5002...4** B4 Ring
Type: **5003...4** B4 Ring

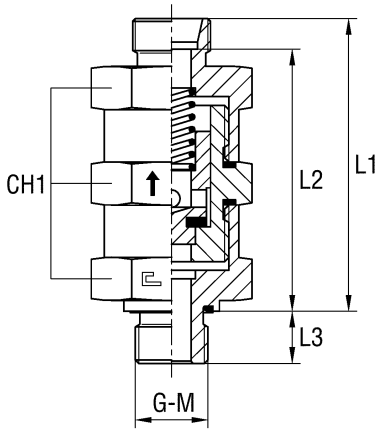

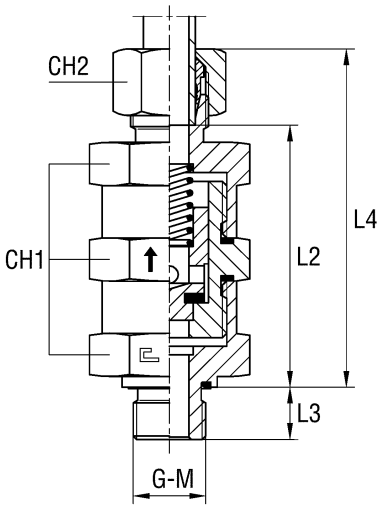

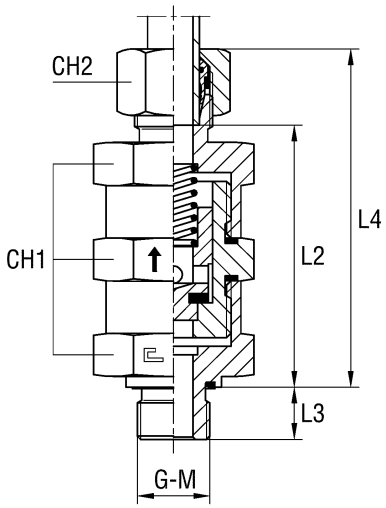

Serie	Bar	Ordering Corpo	Ordering Equipped B3	Ø Tube	G	L1	L2	L3	L4	CH1	CH2	Ø pass.	Ordering Equipped B4
L	250	500204.1	500204	6	1/8	60	53	8	67,5	19	14	4	500204.4
		500205.1	500205	8	1/4	60	53	12	67,5	19	17	4	500205.4
		500206.1	500206	10	1/4	61	54	12	68,5	19	19	4	500206.4
		500207.1	500207	12	3/8	67,5	60,5	12	75	32	22	8	500207.4
		500208.1	500208	15	1/2	72	65	14	80	41	27	11	500208.4
	160	500209.1	500209	18	1/2	72	64,5	14	80,5	41	32	11	500209.4
		500210.1	500210	22	3/4	83	75,5	16	91,5	50	36	16	500210.4
	100	500211.1	500211	28	1	83	75,5	18	92	50	41	18	500211.4
		500212.1	500212	35	1 1/4	103	92,5	20	114	70	50	25	500212.4
		500213.1	500213	42	1 1/2	103	92	22	114,5	70	60	29	500213.4
S	400	500214.1	500214	6	1/4	62	55	12	69,5	19	17	4	500214.4
		500215.1	500215	8	1/4	62	55	12	69,5	19	19	4	500215.4
		500216.1	500216	10	3/8	68,5	61	12	77	32	22	7	500216.4
		500217.1	500217	12	3/8	68,5	61	12	77	32	24	8	500217.4
		500218.1	500218	14	1/2	74	66	14	83,5	41	27	10	500218.4
		500219.1	500219	16	1/2	74	65,5	14	83,5	41	30	11	500219.4
		500220.1	500220	20	3/4	85	74,5	16	96	50	36	16	500220.4
	250	500221.1	500221	25	1	87	75	18	99	50	46	18	500221.4
		500222.1	500222	30	1 1/4	107	93,5	20	120	70	50	25	500222.4
		500223.1	500223	38	1 1/2	109	93	22	123,5	70	60	29	500223.4

Note: If you wish to order a fitting in stainless steel, please change the first two digit from **50..** to **51..**

Serie	Bar	Ordering Corpo	Ordering Completo B3	Ø Tubo	M	L1	L2	L3	L4	CH1	CH2	Ø pass.	Ordering Completo B4
L	250	500304.1	500304	6	10x1	60	53	8	67,5	19	14	4	500304.4
		500305.1	500305	8	12x1,5	60	53	12	67,5	19	17	4	500305.4
		500306.1	500306	10	14x1,5	61	54	12	68,5	19	19	4	500306.4
		500307.1	500307	12	16x1,5	67	60	12	74,5	32	22	8	500307.4
		500308.1	500308	15	18x1,5	72	65	12	80	41	27	11	500308.4
	160	500309.1	50030	18	22x1,5	72	64,5	14	80,5	41	32	11	500309.4
		500310.1	500310	22	26x1,5	83	75,5	16	91,5	50	36	18	500310.4
	100	500311.1	500311	28	33x2	83	75,5	18	92	50	41	18	500311.4
		500312.1	500312	35	42x2	103	92,5	20	114	70	50	25	500312.4
		500313.1	500313	42	48x2	103	92	22	114,5	70	60	29	500313.4
S	400	500314.1	500314	6	12x1,5	62	55	12	69,5	19	17	4	500314.4
		500315.1	500315	8	14x1,5	62	55	12	69,5	19	19	4	500315.4
		500316.1	500316	10	16x1,5	68,5	61	12	77	32	22	7	500316.4
		500317.1	500317	12	18x1,5	68,5	61	12	77	32	24	8	500317.4
		500318.1	500318	14	20x1,5	74	66	14	83,5	41	27	10	500318.4
		500319.1	500319	16	22x1,5	74	65,5	14	83,5	41	30	11	500319.4
		500320.1	500320	20	27x2	85	74,5	16	96	50	36	16	500320.4
	250	500321.1	500321	25	33x2	87	75	18	99	50	46	18	500321.4
		500322.1	500322	30	42x2	107	93,5	20	120	70	50	25	500322.4
		500323.1	500323	38	48x2	109	93	22	123,5	70	60	29	500323.4

Note: If you wish to order a fitting in stainless steel, please change the first two digit from **50..** to **51..**

MALE STUD NON RETURN VALVE WITH ELASTOMER SEAL
Thread BSP Parallel - Thread Metric Parallel

Type: **5004…1** Only Body
Type: **5005…1** Only Body

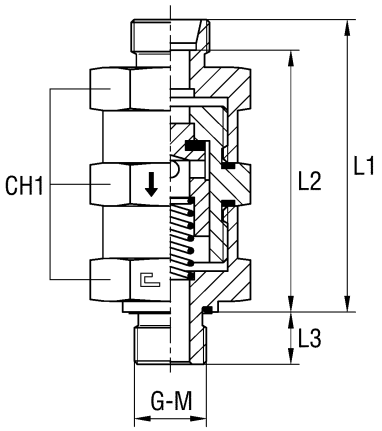

Type: **5004..** B3 Ring
Type: **5005..** B3 Ring

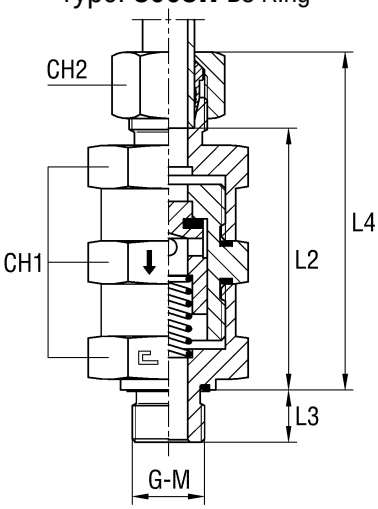

Type: **5004…4** B4 Ring
Type: **5005…4** B4 Ring

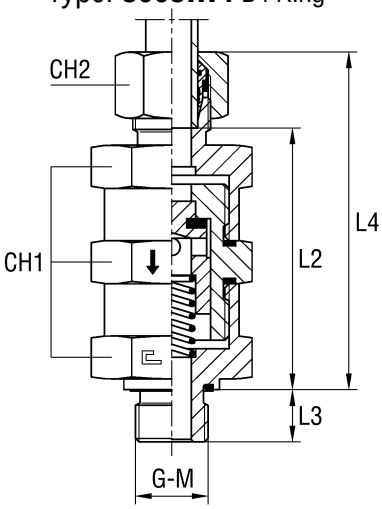

Serie	Bar	Ordering Body	Ordering Equipped B3	Ø Tube	G	L1	L2	L3	L4	CH1	CH2	Ø pass.	Ordering Equipped B4
L	250	500404.1	500404	6	1/8	60	53	8	67,5	19	14	4	500404.4
		500405.1	500405	8	1/4	60	53	12	67,5	19	17	4	500405.4
		500406.1	500406	10	1/4	61	54	12	68,5	19	19	4	500406.4
		500407.1	500407	12	3/8	67,5	60,5	12	75	32	22	8	500407.4
		500408.1	500408	15	1/2	72	65	14	80	41	27	11	500408.4
	160	500409.1	500409	18	1/2	72	64,5	14	80,5	41	32	11	500409.4
		500410.1	500410	22	3/4	83	75,5	16	91,5	50	36	16	500410.4
	100	500411.1	500411	28	1	83	75,5	18	92	50	41	18	500411.4
		500412.1	500412	35	1 1/4	103	92,5	20	114	70	50	25	500412.4
		500413.1	500413	42	1 1/2	103	92	22	114,5	70	60	29	500413.4
S	400	500414.1	500414	6	1/4	62	55	12	69,5	19	17	4	500414.4
		500415.1	500415	8	1/4	62	55	12	69,5	19	19	4	500415.4
		500416.1	500416	10	3/8	68,5	61	12	77	32	22	7	500416.4
		500417.1	500417	12	3/8	68,5	61	12	77	32	24	8	500417.4
		500418.1	500418	14	1/2	74	66	14	83,5	41	27	10	500418.4
		500419.1	500419	16	1/2	74	65,5	14	83,5	41	30	11	500419.4
		500420.1	500420	20	3/4	85	74,5	16	96	50	36	16	500420.4
	250	500421.1	500421	25	1	87	75	18	99	50	46	18	500421.4
		500422.1	500422	30	1 1/4	107	93,5	20	120	70	50	25	500422.4
		500423.1	500423	38	1 1/2	109	93	22	123,5	70	60	29	500423.4

Note: If you wish to order a fitting in stainless steel, please change the first two digit from **50..** to **51..**

Serie	Bar	Ordering Body	Ordering Equipped B3	Ø Tube	M	L1	L2	L3	L4	CH1	CH2	Ø pass.	Ordering Equipped B4
L	250	500504.1	500504	6	10x1	60	53	8	67,5	19	14	4	500504.4
		500505.1	500505	8	12x1,5	60	53	12	67,5	19	17	4	500505.4
		500506.1	500506	10	14x1,5	61	54	12	68,5	19	19	4	500506.4
		500507.1	500507	12	16x1,5	67	60,5	12	74,5	32	22	8	500507.4
		500508.1	500508	15	18x1,5	72	65	12	80	41	27	11	500508.4
	160	500509.1	500509	18	22x1,5	72	64,5	14	80,5	41	32	11	500509.4
		500510.1	500510	22	26x1,5	83	75,5	16	91,5	50	36	18	500510.4
	100	500511.1	500511	28	33x2	83	75,5	18	92	50	41	18	500511.4
		500512.1	500512	35	42x2	103	92,5	20	114	70	50	25	500512.4
		500513.1	500513	42	48x2	103	92	22	114,5	70	60	29	500513.4
S	400	500514.1	500514	6	12x1,5	62	55	12	69,5	19	17	4	500514.4
		500515.1	500515	8	14x1,5	62	55	12	69,5	19	19	4	500515.4
		500516.1	500516	10	16x1,5	68,5	61	12	77	32	22	7	500516.4
		500517.1	500517	12	18x1,5	68,5	61	12	77	32	24	8	500517.4
		500518.1	500518	14	20x1,5	74	66	14	83,5	41	27	10	500518.4
		500519.1	500519	16	22x1,5	74	65,5	14	83,5	41	30	11	500519.4
		500520.1	500520	20	27x2	85	74,5	16	96	50	36	16	500520.4
	250	500521.1	500521	25	33x2	87	75	18	99	50	46	18	500521.4
		500522.1	500522	30	42x2	107	93,5	20	120	70	50	25	500522.4
		500523.1	500523	38	48x2	109	93	22	123,5	70	60	29	500523.4

Note: If you wish to order a fitting in stainless steel, please change the first two digit from **50..** to **51..**

MALE STUD NON RETURN VALVE Thread BSP Taper - Thread NPT

Type: **5006...1** Only Body
Type: **5007...1** Only Body

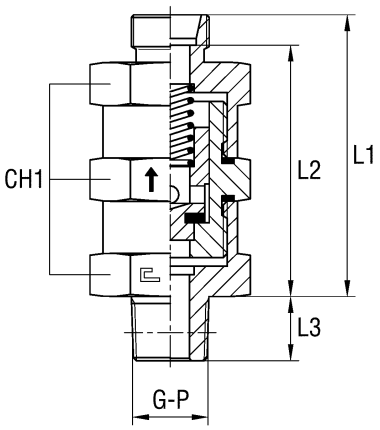

Type: **5006..** B3 Ring
Type: **5007..** B3 Ring

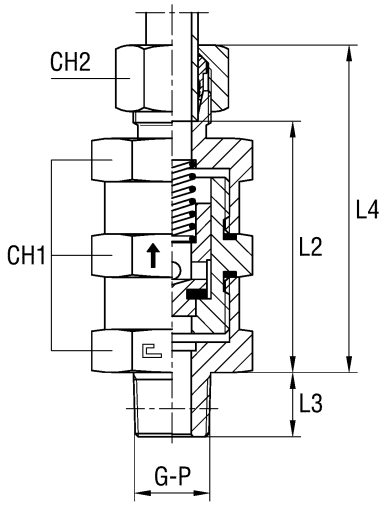

Type: **5006...4** B4 Ring
Type: **5007...4** B4 Ring

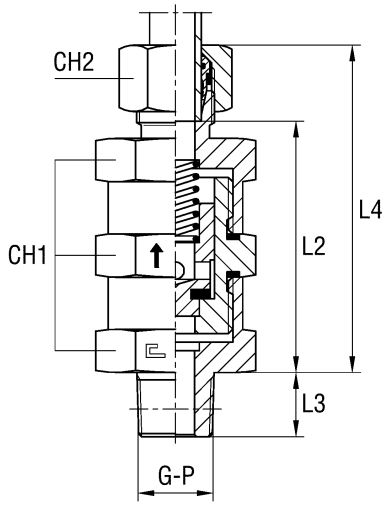

Serie	Bar	Ordering Body	Ordering Equipped B3	Ø Tube	G	L1	L2	L3	L4	CH1	CH2	Ø pass.	Ordering Equipped B4
L	250	500604.1	500604	6	1/8	58	51	10	65,5	19	14	4	500604.4
		500605.1	500605	8	1/4	58	51	15	65,5	19	17	4	500605.4
		500606.1	500606	10	1/4	59	52	15	66,5	19	19	4	500606.4
		500607.1	500607	12	3/8	65	58	15	72,5	32	22	8	500607.4
		500608.1	500608	15	1/2	69	62	19	77	41	27	11	500608.4
	160	500609.1	500609	18	1/2	69	61,5	19	77,5	41	32	11	500609.4
		500610.1	500610	22	3/4	80	72,5	19	88,5	50	36	16	500610.4
	100	500611.1	500611	28	1	80	72,5	24	89	50	41	18	500611.4
		500612.1	500612	35	1 1/4	100	89,5	25	111	70	50	25	500612.4
		500613.1	500613	42	1 1/2	100	89	25	111,5	70	60	29	500613.4
S	400	500614.1	500614	6	1/4	60	53	15	67,5	19	17	4	500614.4
		500615.1	500615	8	1/4	60	53	15	67,5	19	19	4	500615.4
		500616.1	500616	10	3/8	66	58,5	15	74,5	32	22	7	500616.4
		500617.1	500617	12	3/8	66	58,5	15	74,5	32	24	8	500617.4
		500618.1	500618	14	1/2	71	63	19	80,5	41	27	10	500618.4
		500619.1	500619	16	1/2	71	62,5	19	80,5	41	30	11	500619.4
		500620.1	500620	20	3/4	82	71,5	19	93	50	36	16	500620.4
	250	500621.1	500621	25	1	84	72	24	96	50	46	18	500621.4
		500622.1	500622	30	1 1/4	104	90,5	25	117	70	50	25	500622.4
		500623.1	500623	38	1 1/2	106	90	25	120,5	70	60	29	500623.4

Note: If you wish to order a fitting in stainless steel, please change the first two digit from **50..** to **51..**
Articles available on scheduled orders only

Serie	Bar	Ordering Body	Ordering Equipped B3	Ø Tube	P	L1	L2	L3	L4	CH1	CH2	Ø pass.	Ordering Equipped B4
L	250	500704.1	500704	6	1/8	58	51	10	65,5	19	14	4	500704.4
		500705.1	500705	8	1/4	58	51	15	65,5	19	17	4	500705.4
		500706.1	500706	10	1/4	59	52	15	66,5	19	19	4	500706.4
		500707.1	500707	12	3/8	65	58	15	72,5	32	22	8	500707.4
		500708.1	500708	15	1/2	69	62	19	77	41	27	11	500708.4
	160	500709.1	500709	18	1/2	69	61,5	19	77,5	41	32	11	500709.4
		500710.1	500710	22	3/4	80	72,5	19	88,5	50	36	16	500710.4
	100	500711.1	500711	28	1	80	72,5	24	89	50	41	18	500711.4
		500712.1	500712	35	1 1/4	100	89,5	25	111	70	50	25	500712.4
		500713.1	500713	42	1 1/2	100	89	25	111,5	70	60	29	500713.4
S	400	500714.1	500714	6	1/4	60	53	15	67,5	19	17	4	500714.4
		500715.1	500715	8	1/4	60	53	15	67,5	19	19	4	500715.4
		500716.1	500716	10	3/8	66	58,5	15	74,5	32	22	7	500716.4
		500717.1	500717	12	3/8	66	58,5	15	74,5	32	24	8	500717.4
		500718.1	500718	14	1/2	71	63	19	80,5	41	27	10	500718.4
		500719.1	500719	16	1/2	71	62,5	19	80,5	41	30	11	500719.4
		500720.1	500720	20	3/4	82	71,5	19	93	50	36	16	500720.4
	250	500721.1	500721	25	1	84	72	24	96	50	46	18	500721.4
		500722.1	500722	30	1 1/4	104	90,5	25	117	70	50	25	500722.4
		500723.1	500723	38	1 1/2	106	90	25	120,5	70	60	29	500723.4

Note: If you wish to order a fitting in stainless steel, please change the first two digit from **50..** to **51..** .
Articles available on scheduled orders only

MALE STUD NON RETURN VALVE Thread BSP Taper - Thread NPT

Type: **5008...1** Only Body
Type: **5009...1** Only Body

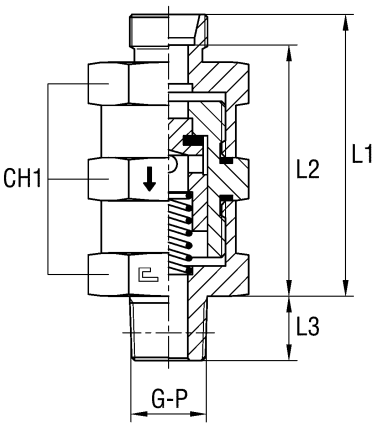

Type: **5008..** B3 Ring
Type: **5009..** B3 Ring

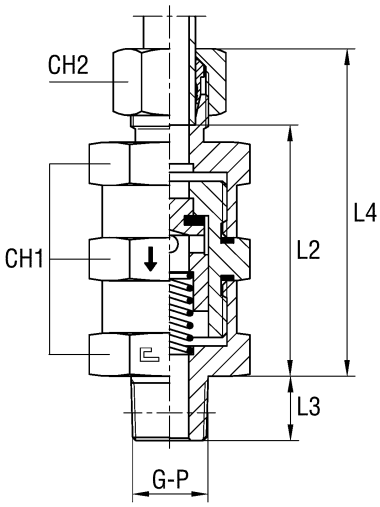

Type: **5008...4** B4 Ring
Type: **5009...4** B4 Ring

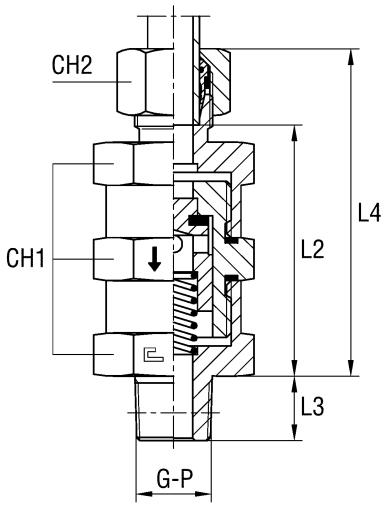

Serie	Bar	Ordering Body	Ordering Equipped B3	Ø Tube	G	L1	L2	L3	L4	CH1	CH2	Ø pass.	Ordering Equipped B4
L	250	500804.1	500804	6	1/8	58	51	10	65,5	19	14	4	500804.4
		500805.1	500805	8	1/4	58	51	15	65,5	19	17	4	500805.4
		500806.1	500806	10	1/4	59	52	15	66,5	19	19	4	500806.4
		500807.1	500807	12	3/8	65	58	15	72,5	32	22	8	500807.4
		500808.1	500808	15	1/2	69	62	19	77	41	27	11	500808.4
	160	500809.1	500809	18	1/2	69	61,5	19	77,5	41	32	11	500809.4
		500810.1	500810	22	3/4	80	72,5	19	88,5	50	36	16	500810.4
	100	500811.1	500811	28	1	80	72,5	24	89	50	41	18	500811.4
		500812.1	500812	35	1 1/4	100	89,5	25	111	70	50	25	500812.4
		500813.1	500813	42	1 1/2	100	89	25	111,5	70	60	29	500813.4
S	400	500814.1	500814	6	1/4	60	53	15	67,5	19	17	4	500814.4
		500815.1	500815	8	1/4	60	53	15	67,5	19	19	4	500815.4
		500816.1	500816	10	3/8	66	58,5	15	74,5	32	22	7	500816.4
		500817.1	500817	12	3/8	66	58,5	15	74,5	32	24	8	500817.4
		500818.1	500818	14	1/2	71	63	19	80,5	41	27	10	500818.4
		500819.1	500819	16	1/2	71	62,5	19	80,5	41	30	11	500819.4
		500820.1	500820	20	3/4	82	71,5	19	93	50	36	16	500820.4
	250	500821.1	500821	25	1	84	72	24	96	50	46	18	500821.4
		500822.1	500822	30	1 1/4	104	90,5	25	117	70	50	25	500822.4
		500823.1	500823	38	1 1/2	106	90	25	120,5	70	60	29	500823.4

Note: If you wish to order a fitting in stainless steel, please change the first two digit from **50..** to **51..**
Articles available on scheduled orders only

Serie	Bar	Ordering Body	Ordering Equipped B3	Ø Tube	P	L1	L2	L3	L4	CH1	CH2	Ø pass.	Ordering Equipped B4
L	250	500904.1	500904	6	1/8	58	51	10	65,5	19	14	4	500904.4
		500905.1	500905	8	1/4	58	51	15	65,5	19	17	4	500905.4
		500906.1	500906	10	1/4	59	52	15	66,5	19	19	4	500906.4
		500907.1	500907	12	3/8	65	58	15	72,5	32	22	8	500907.4
		500908.1	500908	15	1/2	69	62	19	77	41	27	11	500908.4
	160	500909.1	500909	18	1/2	69	61,5	19	77,5	41	32	11	500909.4
		500910.1	500910	22	3/4	80	72,5	19	88,5	50	36	16	500910.4
	100	500911.1	500911	28	1	80	72,5	24	89	50	41	18	500911.4
		500912.1	500912	35	1 1/4	100	89,5	25	111	70	50	25	500912.4
		500913.1	500913	42	1 1/2	100	89	25	111,5	70	60	29	500913.4
S	400	500914.1	500914	6	1/4	60	53	15	67,5	19	17	4	500914.4
		500915.1	500915	8	1/4	60	53	15	67,5	19	19	4	500915.4
		500916.1	500916	10	3/8	66	58,5	15	74,5	32	22	7	500916.4
		500917.1	500917	12	3/8	66	58,5	15	74,5	32	24	8	500917.4
		500918.1	500918	14	1/2	71	63	19	80,5	41	27	10	500918.4
		500919.1	500919	16	1/2	71	62,5	19	80,5	41	30	11	500919.4
		500920.1	500920	20	3/4	82	71,5	19	93	50	36	16	500920.4
	250	500921.1	500921	25	1	84	72	24	96	50	46	18	500921.4
		500922.1	500922	30	1 1/4	104	90,5	25	117	70	50	25	500922.4
		500923.1	500923	38	1 1/2	106	90	25	120,5	70	60	29	500923.4

Note: If you wish to order a fitting in stainless steel, please change the first two digit from **50..** to **51..**
Articles available on scheduled orders only

FEMALE NON RETURN VALVE Thread BSP Parallel - Thread Metric Parallel

Type: **5010..**
Type: **5011..**

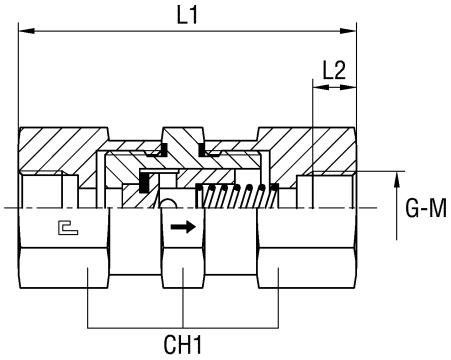

Serie	Bar	Ordering Complete	G	L1	L2	CH1	Ø pass.
S	400	501001	1/8	70	10	19	4
		501002	1/4	80	14	19	4
		501003	3/8	88	14	32	8
		501004	1/2	103	17	41	11
		501005	3/4	110	19	50	16
	250	501006	1	122	21,5	50	18
		501007	1 1/4	142	23,5	70	29
		501008	1 1/2	142	25,5	70	29

Note: If you wish to order a fitting in stainless steel, please change the first two digit from **50..** to **51..**
Articles available on scheduled orders only

Serie	Bar	Ordering Complete	M	L1	L2	CH1	Ø pass.
S	400	501101	10x1	70	10	19	4
		501102	14x1,5	80	14,5	19	4
		501103	16x1,5	88	14,5	32	8
		501104	22x1,5	103	16,5	41	11
		501105	27x2	110	19	50	16
	250	501106	33x2	122	21	50	18
		501107	42x2	142	23	70	29
		501108	48x2	142	25	70	29

Note: If you wish to order a fitting in stainless steel, please change the first two digit from **50..** to **51..**
Articles available on scheduled orders only

FEMALE NON RETURN VALVE Thread BSP Taper - Thread NPT

Type: **5012..**
Type: **5013..**

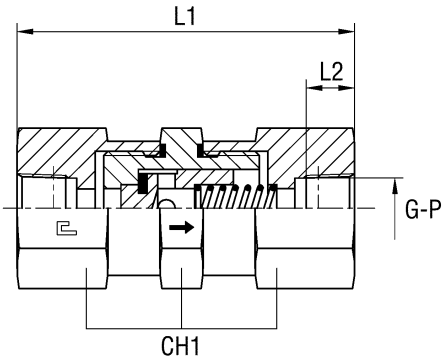

Serie	Bar	Ordering Complete	G	L1	L2	CH1	Ø pass.
S	400	501201	1/8	70	9,5	19	4
		501202	1/4	80	14	19	4
		501203	3/8	88	14,5	32	8
		501204	1/2	103	19	41	11
		501205	3/4	110	19,5	50	16
	250	501206	1	122	23,5	50	18
		501207	1 1/4	142	24	70	29
		501208	1 1/2	142	24	70	29

Note: If you wish to order a fitting in stainless steel, please change the first two digit from **50..** to **51..**
Articles available on scheduled orders only

Serie	Bar	Ordering Complete	P	L1	L2	CH1	Ø pass.
S	400	501301	1/8	70	9,5	19	4
		501302	1/4	80	14	19	4
		501303	3/8	88	14,5	32	8
		501304	1/2	103	19	41	11
		501305	3/4	110	19,5	50	16
	250	501306	1	122	23,5	50	18
		501307	1 1/4	142	24	70	29
		501308	1 1/2	142	24	70	29

Note: If you wish to order a fitting in stainless steel, please change the first two digit from **50..** to **51..**
Articles available on scheduled orders only

EQUAL NON RETURN VALVE

Type: **5014..** O-ring Body

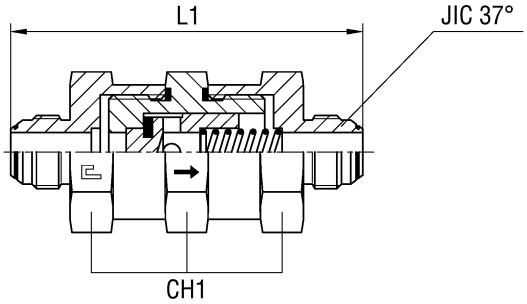

Type: **5014...3** Standard Body

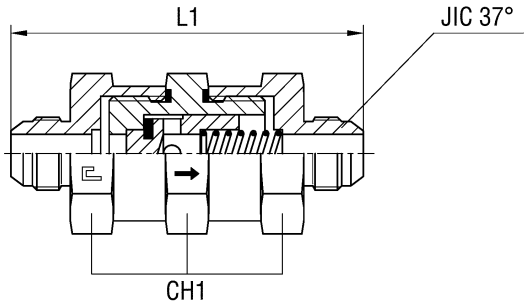

Serie	Bar	Ordering O-ring Body	Ø Tube M	Ø Tube W	L1	CH1	Ø pass.	JIC 37°	Ordering Standard Body
UNIVERSALE	400	501401	6	1/4	76	19	2,8	7/16-20	501401.3
		501402	8	5/16	76	19	4	1/2-20	501402.3
	350	501403	10	3/8	76,2	19	4	9/16-18	501403.3
		501404	12	1/2	87,4	32	8	3/4-16	501404.3
		501405	14-15-16	5/8	95,6	41	11	7/8-14	501405.3
		501406	18-20	3/4	109,8	50	14,5	11/16-12	501406.3
	290	501407	25	1	112,2	50	18	15/16-12	501407.3
	240	501408	30-32	1 1/4	132,6	70	25,5	1 5/8-12	501408.3
		501409	38	1 1/2	139	70	29	1 7/8-12	501409.3

Note: If you wish to order a fitting in stainless steel, please change the first two digit from **50..** to **51..**

MALE STUD NON RETURN VALVE WITH ELASTOMER SEAL
Thread BSP Parallel - Thread Metric Parallel

Type: **5015..** O-ring Body
Type: **5016..** O-ring Body

Type: **5015...3** Standard Body
Type: **5016...3** Standard Body

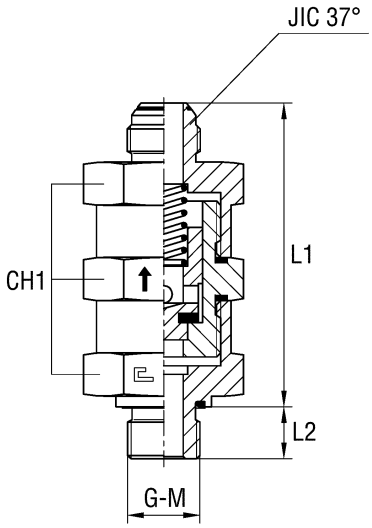

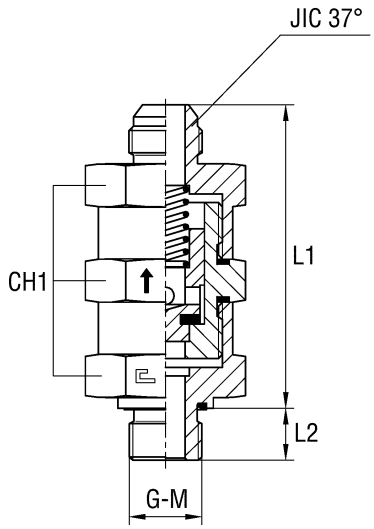

Serie	Bar	Ordering O-ring Body	Ø Tube M	Ø Tube W	G	L1	L2	CH1	Ø pass.	JIC 37°	Ordering Standard Body
UNIVERSAL	350	501501	6	1/4	1/8	64	8	19	2,8	7/16-20	501501.3
		501502	8	5/16	1/8	64	8	19	4	1/2-20	501502.3
		501503	10	3/8	1/4	64,1	12	19	4	9/16-18	501503.3
		501504	12	1/2	3/8	73,2	12	32	8	3/4-16	501504.3
		501505	14-15-16	5/8	1/2	79,3	14	41	11	7/8-14	501505.3
		501506	18-20	3/4	3/4	90,9	16	50	14,5	11/16-12	501506.3
	290	501507	25	1	1	92,1	18	50	18	15/16-12	501507.3
	240	501508	30-32	1 1/4	1 1/4	111,3	20	70	25,5	1 5/8-12	501508.3
		501509	38	1 1/2	1 1/2	114,5	22	70	29	1 7/8-12	501509.3

Note: If you wish to order a fitting in stainless steel, please change the first two digit from **50..** to **51..**

Serie	Bar	Ordering O-ring Body	Ø Tube M	Ø Tube W	M	L1	L2	CH1	Ø pass.	JIC 37°	Ordering Standard Body
UNIVERSAL	350	501601	6	1/4	10x1	64	8	19	2,8	7/16-20	501601.3
		501602	8	5/16	12x1,5	64	8	19	4	1/2-20	501602.3
		501603	10	3/8	14x1,5	64,1	12	19	4	9/16-18	501603.3
		501604	12	1/2	16x1,5	73,2	12	32	8	3/4-16	501604.3
		501605	14-15-16	5/8	22x1,5	79,3	14	41	11	7/8-14	501605.3
		501606	18-20	3/4	27x2	90,9	16	50	14,5	11/16-12	501606.3
	290	501607	25	1	33x2	92,1	18	50	18	15/16-12	501607.3
	240	501608	30-32	1 1/4	42x2	111,3	20	70	25,5	1 5/8-12	501608.3
		501609	38	1 1/2	48x2	114,5	22	70	29	1 7/8-12	501609.3

Note: If you wish to order a fitting in stainless steel, please change the first two digit from **50..** to **51..**

MALE STUD NON RETURN VALVE WITH ELASTOMER SEAL
Thread BSP Parallel - Thread Metric Parallel

Type: **5017..** O-ring Body
Type: **5018..** O-ring Body

Type: **5017...3** Standard Body
Type: **5018...3** Standard Body

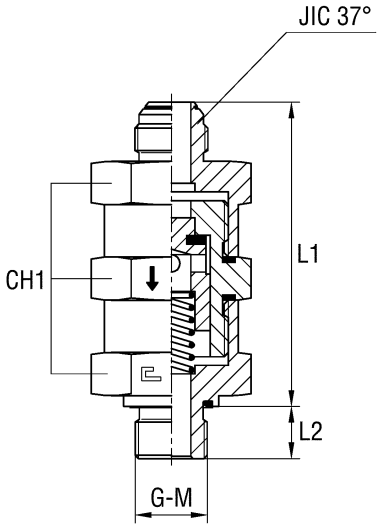

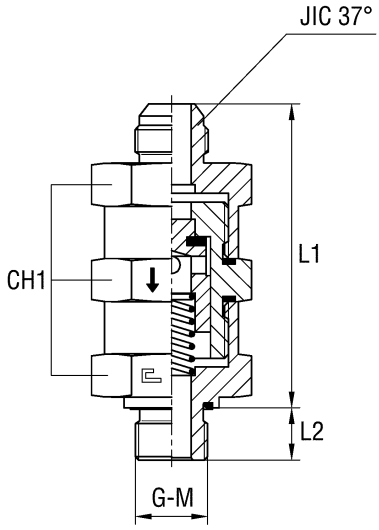

Serie	Bar	Ordering O-ring Body	Ø Tube M	Ø Tube W	G	L1	L2	CH1	Ø pass.	JIC 37°	Ordering Standard Body
UNIVERSAL	350	501701	6	1/4	1/8	64	8	19	2,8	7/16-20	501701.3
		501702	8	5/16	1/8	64	8	19	4	1/2-20	501702.3
		501703	10	3/8	1/4	64,1	12	19	4	9/16-18	501703.3
		501704	12	1/2	3/8	73,2	12	32	8	3/4-16	501704.3
		501705	14-15-16	5/8	1/2	79,3	14	41	11	7/8-14	501705.3
		501706	18-20	3/4	3/4	90,9	16	50	14,5	11/16-12	501706.3
	290	501707	25	1	1	92,1	18	50	18	15/16-12	501707.3
	240	501708	30-32	1 1/4	1 1/4	111,3	20	70	25,5	1 5/8-12	501708.3
		501709	38	1 1/2	1 1/2	114,5	22	70	29	1 7/8-12	501709.3

Note: If you wish to order a fitting in stainless steel, please change the first two digit from **50..** to **51..**

Serie	Bar	Ordering O-ring Body	Ø Tube M	Ø Tube W	M	L1	L2	CH1	Ø pass.	JIC 37°	Ordering Standard Body
UNIVERSAL	350	501801	6	1/4	10x1	64	8	19	2,8	7/16-20	501801.3
		501802	8	5/16	12x1,5	64	8	19	4	1/2-20	501802.3
		501803	10	3/8	14x1,5	64,1	12	19	4	9/16-18	501803.3
		501804	12	1/2	16x1,5	73,2	12	32	8	3/4-16	501804.3
		501805	14-15-16	5/8	22x1,5	79,3	14	41	11	7/8-14	501805.3
		501806	18-20	3/4	27x2	90,9	16	50	14,5	11/16-12	501806.3
	290	501807	25	1	33x2	92,1	18	50	18	15/16-12	501807.3
	240	501808	30-32	1 1/4	42x2	111,3	20	70	25,5	1 5/8-12	501808.3
		501809	38	1 1/2	48x2	114,5	22	70	29	1 7/8-12	501809.3

Note: If you wish to order a fitting in stainless steel, please change the first two digit from **50..** to **51..**

MALE STUD NON RETURN VALVE WITH O-RING Thread UNF/UN-2A

Type: **5019..** O-ring Body

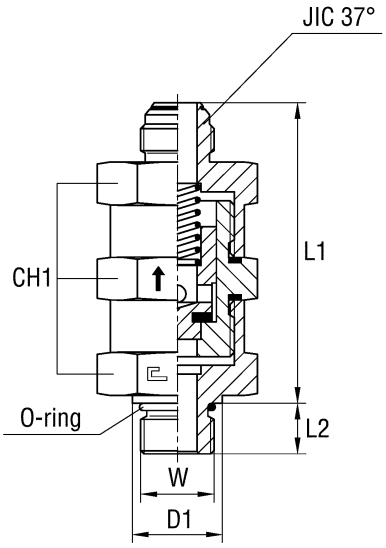

Type: **5019...3** Standard Body

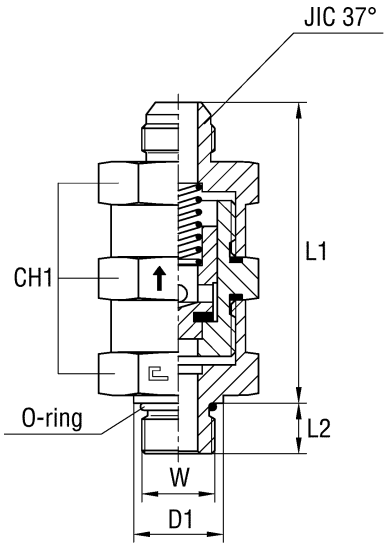

Serie	Bar	Ordering O-ring Body	Ø Tube M	Ø Tube W	W	D1	L1	L2	CH1	Ø pass.	JIC 37°	Ordering Standard Body
UNIVERSAL	400	501901	6	1/4	7/16-20	13,8	62,5	9,1	19	2,8	7/16-20	501901.3
		501902	8	5/16	1/2-20	16,8	62,5	9,1	19	4	1/2-20	501902.3
	350	501903	10	3/8	9/16-20	16,8	62,1	10	19	4	9/16-18	501903.3
		501904	12	1/2	3/4-16	21,8	70,7	11,1	32	8	3/4-16	501904.3
		501905	14-15-16	5/8	7/8-14	26,8	76,3	12,7	41	11	7/8-14	501905.3
		501906	18-20	3/4	11/16-12	31,8	87,9	15,1	50	14,5	11/16-12	501906.3
	290	501907	25	1	15/16-12	40,8	89,1	15,1	50	18	15/16-12	501907.3
	240	501908	30-32	1 1/4	15/8-12	49,8	108,3	15,1	70	25,5	15/8-12	501908.3
		501909	38	1 1/2	17/8-12	54,8	111,5	15,1	70	29	17/8-12	501909.3

Note: If you wish to order a fitting in stainless steel, please change the first two digit from **50..** to **51..**
Articles available on request only

MALE STUD NON RETURN VALVE WITH O-RING Thread UNF/UN-2A

Type: **5020..** O-ring Body

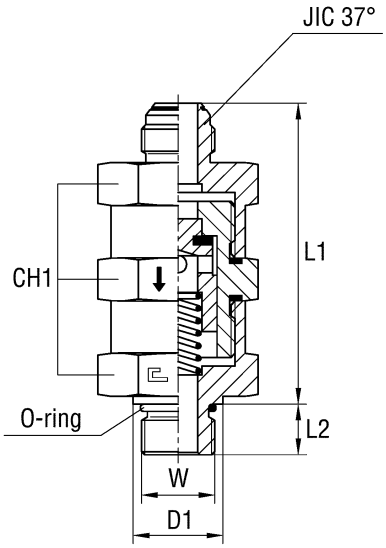

Type: **5020...3** Standard Body

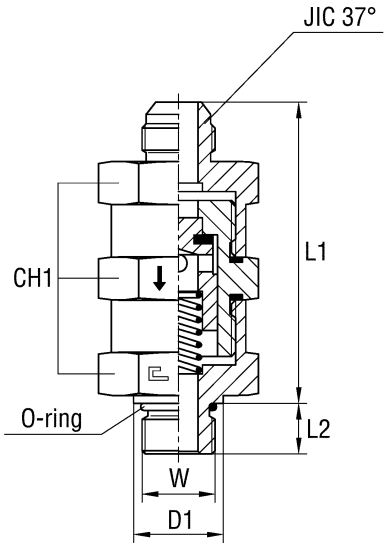

Serie	Bar	Ordering O-ring Body	Ø Tube M	Ø Tube W	W	D1	L1	L2	CH1	Ø pass.	JIC 37°	Ordering Standard Body
UNIVERSAL	400	502001	6	1/4	7/16-20	13,8	62,5	9,1	19	2,8	7/16-20	502001.3
		502002	8	5/16	1/2-20	16,8	62,5	9,1	19	4	1/2-20	502002.3
	350	502003	10	3/8	9/16-20	16,8	62,1	10	19	4	9/16-18	502003.3
		502004	12	1/2	3/4-16	21,8	70,7	11,1	32	8	3/4-16	502004.3
		502005	14-15-16	5/8	7/8-14	26,8	76,3	12,7	41	11	7/8-14	502005.3
		502006	18-20	3/4	11/16-12	31,8	87,9	15,1	50	14,5	11/16-12	502006.3
	290	502007	25	1	15/16-12	40,8	89,1	15,1	50	18	15/16-12	502007.3
	240	502008	30-32	1 1/4	1 5/8-12	49,8	108,3	15,1	70	25,5	1 5/8-12	502008.3
		502009	38	1 1/2	1 7/8-12	54,8	111,5	15,1	70	29	1 7/8-12	502009.3

Note: If you wish to order a fitting in stainless steel, please change the first two digit from **50..** to **51..**
Articles available on request only

EQUAL NON RETURN NEEDLE VALVE

Type: **5021..** O-ring Body

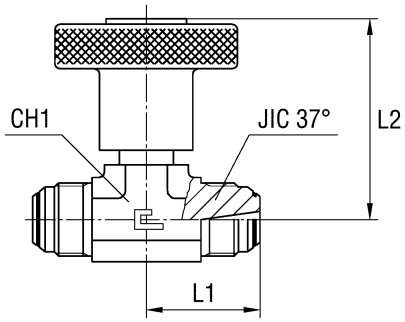

Type: **5021...3** Standard Body

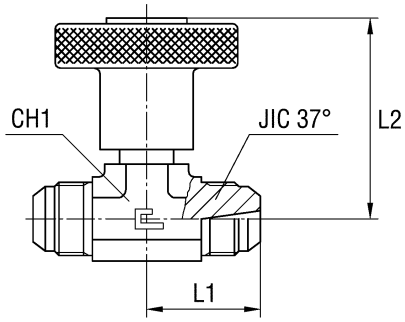

Serie	Bar	Ordering O-ring Body	Ø Tube M	Ø Tube W	L1	L2	CH1	JIC 37°	Ordering Standard Body
UNIVERSAL	350	502101	6	1/4	23	50	19	7/16-20	502101.3
		502102	8	5/16	24	50	19	1/2-20	502101.3
		502103	10	3/8	27	50	19	9/16-18	502101.3
		502104	12	1/2	32	60	22	3/4-16	502101.3

Note: If you wish to order a fitting in stainless steel, please change the first two digit from **50..** to **51..**

FEMALE TEE NEEDLE VALVE
Thread BSP Parallel - Thread Metric Parallelo

Type: **5022..**
Type: **5023..**

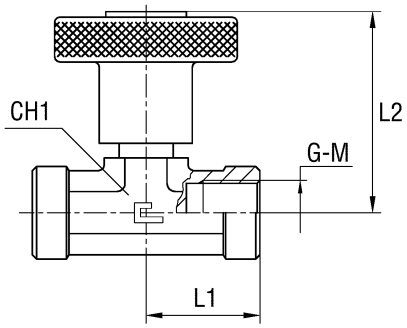

Serie	Bar	Ordering Complete	G	L1	L2	CH1
UNIVERSAL	350	502201	1/8	27	50	19
		502202	1/4	27	50	19
		502203	3/8	32	60	22
		502204	1/2	41	64	27

Note: If you wish to order a fitting in stainless steel, please change the first two digit from **50..** to **51..**

Serie	Bar	Ordering Complete	M	L1	L2	CH1
UNIVERSAL	350	502301	10x1	27	50	19
		502302	14x1,5	27	50	19
		502303	16x1,5	32	60	22
		502304	22x1,5	41	64	27

Note: If you wish to order a fitting in stainless steel, please change the first two digit from **50..** to **51..**

FEMALE TEE NEEDLE VALVE Thread BSP Taper - Thread NPT

Type: **5024..**
Type: **5025..**

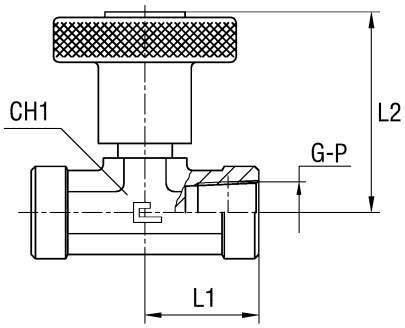

Serie	Bar	Ordering Complete	G	L1	L2	CH1
UNIVERSAL	350	502401	1/8	27	50	19
		502402	1/4	27	50	19
		502403	3/8	32	60	22
		502404	1/2	41	64	27

Note: If you wish to order a fitting in stainless steel, please change the first two digit from **50..** to **51..**

Serie	Bar	Ordering Complete	P	L1	L2	CH1
UNIVERSAL	350	502505	1/8	27	50	19
		502506	1/4	27	50	19
		502507	3/8	32	60	22
		502508	1/2	41	64	27

Note: If you wish to order a fitting in stainless steel, please change the first two digit from **50..** to **51..**

INDEX

INTRODUCTION

- CAST S.p.A. Group Pag. 1
- The fitting's choice Pag. 2
- Quality certification Pag. 3
- Visual index Pag. 4
- Ordering example Pag. 9
- General information Pag.12
- Tubes Pag.14
- Compatible fluids table Pag.16
- Prescriptions to comply with on all series Pag.18
- Product liability Pag.18

DIN 2353

- Theory of operation B3 cutting ring Pag.20
- Technical characteristics B3 cutting ring Pag.21
- Detail of B3 cutting ring sealing points Pag.22
- Theory of operation B4 cutting ring Pag.24
- Technical characteristics B4 cutting ring Pag.25
- Detail of B4 cutting ring sealing points Pag.26
- Technical innovation B4 cutting ring Pag.27
- General instructions for B3 and B4 rings Pag.28
- DIN 2353 thread tables
  - BSPP thread Pag.30
  - Metric thread Pag.31
  - Metric thread (ISO 6149) Pag.32
  - UNF/UN Pag.33
  - BSPT / NPT thread Pag.34
  - Metric taper thread Pag.35
- Tightening torques for B3 and B4 cutting rings Pag.36
- Series 60… swivel nut Pag.37
- Tightening torques for swivel nut fittings Pag.37
- Definition of cone size to din 3861 standards Pag.38

SAE J514

- Theory of operation of standard 37° fitting Pag.40
- Technical characteristics of standard 37° fitting Pag.41
- Detail of standard 37° cone sealing points Pag.42
- Theory of operation of 37° O-ring fitting Pag.44
- Technical characteristics of 37° O-ring fitting Pag.45
- Detail of 37° O-ring cone sealing points Pag.46
- Technical innovation of 37° O-ring fitting Pag.46
- General instructions for standard and O-ring fitting Pag.47
- tightening torques for tube ends and swivel nut fittings Pag.49
- SAE J514 thread tables
  - BSPP thread Pag.50
  - Metric thread Pag.51
  - Metric thread (ISO 6149) Pag.52
  - UNF/UN Pag.53
  - BSPT / NPTF thread Pag.54

BSI 5200

- Theory of operation Pag. 56
- Technical characteristics Pag. 57
- Detail 60° cone sealing points Pag. 58
- Technical innovation Pag. 58
- General instructions Pag. 59
- Tightening torques for swivel nut fittings Pag. 60
- BSI 5200 thread tables
  - BSPP thread Pag. 62
  - Metric thread Pag. 63
  - Metric thread (ISO 6149) Pag. 64
  - BSPT thread Pag. 65
  - NPT thread Pag. 66

VALVES

- Non-return valve Pag. 68
- Needle valve Pag. 69

ASSEMBLY INSTRUCTIONS FOR ALL SERIES

- Assembly instructions according to DIN 3859-2 for B3 - B4 Pag. 70
- Assembly instructions according to SAE J514 Pag. 72
- Technical datas for the flaring of the 37° tube Pag. 73
- Assembly instructions for swivel nut fittings series DIN 2353, SAE J514, BSI 5200 Pag. 74
- Assembly instructions for adjustable fittings Pag. 75

FITTING TABLES

- DIN 2353 series 10-11 fitting tables Pag. 76
- O-ring and gaskets tables Pag.160
- DIN 2353 assembly tools Pag.161
- DIN 2353 series 60-61 fitting tables Pag.162
- SAE J514 series 20-21 O-ring fitting tables Pag.176
- SAE J514 series 20…3-21…3 fitting tables Pag.176
- SAE J514 flaring tools Pag.225
- BSI 5200 series 30-31 fitting tables Pag.226
- Non-return valves series 50-51 fitting tables Pag.272
- Needle valves series 50-51 fitting tables Pag.272

SALES AREAS

• This technical commercial catalogue was originally made in Italian and then traslated.
In case of misinterpretation or misunderstanding of the same of the parts here contained, is the original Italian version that will show evidence of the facts.

• The technical data, measurements etc. indicated in this catalogue are for guidance purposes only. The overall dimensions refer to the closed fitting.

• In the case of modifications, change of model or phasing out, we cannot be obliged to deliver products with the previous characteristics.

• To keep step with technological developments, CAST S.p.A. reserves the right to modify shape and dimensions without prior notice.

• For the general conditions of supply, reference shall be made to the GENERAL SALES TERMS contained in the latest pricelist, complete by commercial agreements in written means between the parties.
Issued: January 2002 - Printed: January 2002

• This catalogue replaces and supersedes at all effects the ones issued before.